# TECHNICAL INSTRUCTION BOOK – VOLUME I

## CDRL F13

## ENHANCED TERMINAL VOICE SWITCH (ETVS)

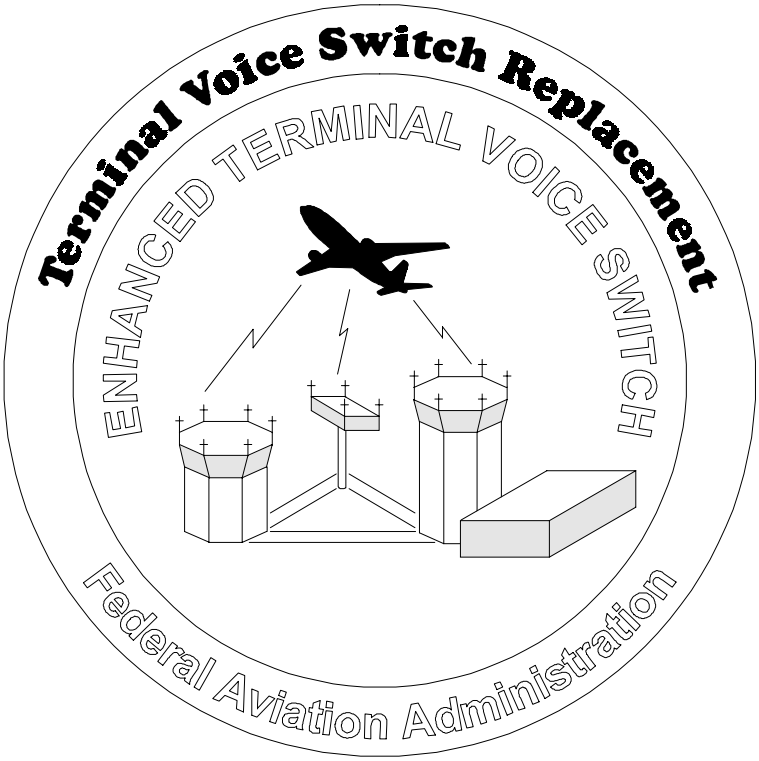


CONTRACT NO: DTFA01-95-C-00027

**Prepared For:**
**FEDERAL AVIATION ADMINISTRATION**
**800 Independence Avenue, S.W.,**
**WASHINGTON, DC 20591**

Prepared By:
**Litton** Denro
9318 Gaither Road
Gaithersburg, MD 20877
(301) 840-1597

FCC REG# B4TUSA-75540-MF-E

Revisions:

| Revision Number | Date | Title or Brief Description |
|---|---|---|
| B | 99/06/01 | Revised and reprinted |

**Litton** Denro

9318 Gaither Road
Gaithersburg, MD 20877

Phone: 301-840-1597
Facsimile: 301-869-3192
Customer Service: 800-952-2502
301-869-1628

Web address: http://www.DENRO.com
Email address: DENRO@DENRO.com

Printed in the United States of America

# TABLE OF CONTENTS


| Section/Paragraph | Title | Page |
|---|---|---|
| SECTION 1 | GENERAL INFORMATION | 1-1 |
| 1.1 | INTRODUCTION | 1-1 |
| 1.2 | SYSTEM DESCRIPTION | 1-1 |
| 1.3 | FEATURES AND FUNCTIONS | 1-6 |
| 1.4 | FUNCTIONAL DESCRIPTION | 1-8 |
| 1.5 | CONFIGURATION | 1-11 |
| 1.6 | EQUIPMENT DESCRIPTION | 1-12 |
| 1.6.1 | Central Rack Equipment | 1-12 |
| 1.6.2 | Configuration and Control Subsystem | 1-14 |
| 1.6.3 | Position Equipment | 1-14 |
| 1.6.4 | Remote Power Rack | 1-16 |
| 1.7 | EQUIPMENT SPECIFICATION DATA | 1-16 |
| 1.8 | EQUIPMENT AND ACCESSORIES SUPPLIED | 1-20 |
| 1.9 | EQUIPMENT REQUIRED BUT NOT SUPPLIED | 1-20 |
| 1.10 | ETVS DOCUMENTATION | 1-21 |
| SECTION 2 | INSTALLATION | 2-1 |
| 2.1 | INTRODUCTION | 2-1 |
| 2.1.1 | General Background Information | 2-1 |
| 2.1.2 | Equipment Description | 2-1 |
| 2.1.2.1 | Basic System Configuration | 2-1 |
| 2.1.2.2 | Common Equipment Configurations | 2-2 |
| 2.2 | PRE-INSTALLATION PREPARATION | 2-2 |
| 2.2.1 | Pre-Installation Requirements Survey | 2-2 |
| 2.2.2 | Computer Software Installation | 2-4 |
| 2.2.2.1 | Typical Computer Software Inventory | 2-4 |
| 2.2.2.2 | Software Factory Installation/Checkout (General Background) | 2-4 |
| 2.2.2.3 | $I^2C$ Addresses (of Devices with Hex Switch) | 2-6 |
| 2.3 | INPUT REQUIREMENT SUMMARY | 2-7 |
| 2.3.1 | AC Input Power | 2-7 |
| 2.3.2 | Ambient Temperature Limits | 2-9 |
| 2.4 | UNPACKING (AT INSTALLATION SITE) | 2-9 |
| 2.5 | ON-SITE INSTALLATION | 2-10 |
| 2.5.1 | Central Equipment Racks | 2-10 |
| 2.5.2 | Position Equipment | 2-11 |
| 2.5.3 | Intra-Position Cabling | 2-12 |
| 2.5.4 | Position-to-Central Rack Cabling | 2-12 |
| 2.5.5 | Intra-Rack Cabling | 2-13 |
| 2.5.6 | Demarcation Cabling | 2-13 |

# TABLE OF CONTENTS (Continued)

| Section/Paragraph | Title | Page |
|---|---|---|
| 2.5.7 | SCT/MCT Cabling | 2-14 |
| 2.5.8 | Primary Power Cabling | 2-14 |
| 2.6 | INSPECTION | 2-14 |
| 2.6.1 | Equipment Placement | 2-14 |
| 2.6.2 | Cable Interconnections | 2-15 |
| 2.6.3 | Equipment Access | 2-15 |
| 2.6.4 | Environmental Requirements | 2-15 |
| 2.7 | INSTALLATION CHECKLIST | 2-16 |
| 2.8 | CONTINUITY CHECKS | 2-16 |
| 2.8.1 | Demarc Cable Continuity Checks | 2-17 |
| 2.8.2 | Position Data Cable Continuity Checks | 2-17 |
| 2.9 | SYSTEM POWER-UP (START-UP) AND POWER TESTS | 2-17 |
| 2.10 | TURN-ON AND CHECKOUT | 2-19 |
| 2.10.1 | Introduction | 2-19 |
| 2.10.2 | Position Confidence Test | 2-20 |
| 2.10.2.1 | Set-up Procedure | 2-20 |
| 2.10.2.2 | TED Position, Local/Remote (Touch Screen Position) | 2-21 |
| 2.10.2.3 | Membrane Hardkey Position, Local/Remote | 2-23 |
| 2.11 | SCT/MCT POWER-UP AND INITIAL TESTING | 2-24 |
| 2.12 | SYSTEM CHECKOUT PROCEDURES | 2-25 |
| 2.13 | SITE INTEGRATION—INTERFACING | 2-25 |
| SECTION 3 | OPERATION | 3-1 |
| 3.1 | SCOPE | 3-1 |
| 3.1.1 | ETVS System Description | 3-2 |
| 3.1.2 | Position Equipment General Description | 3-3 |
| 3.1.2.1 | Touch Entry Positions | 3-3 |
| 3.1.2.2 | Hardkey Positions | 3-5 |
| 3.1.2.3 | Additional Position Equipment | 3-6 |
| 3.1.2.4 | Operator Keys | 3-8 |
| 3.1.2.5 | Key Allocations | 3-8 |
| 3.1.3 | Operational Features | 3-9 |
| 3.2 | CONTROLS AND INDICATORS | 3-10 |
| 3.2.1 | Normal and Split-Position Equipment | 3-10 |
| 3.2.2 | TED Position Controls and Indicators | 3-14 |
| 3.2.2.1 | TED Radio Key Set | 3-20 |
| 3.2.3 | Hardkey Position Controls and Indicators | 3-21 |
| 3.2.3.1 | Hardkey Radio Key Set | 3-31 |
| 3.2.4 | Audio Routing | 3-31 |

# TABLE OF CONTENTS (Continued)

| Section/Paragraph | Title | Page |
|---|---|---|
| 3.2.4.1 | Software Managed Position Audio Routing | 3-31 |
| 3.2.5 | Communications Status Indicators | 3-32 |
| 3.2.6 | IA Codes | 3-35 |
| 3.2.7 | Jackbox | 3-36 |
| 3.3 | TURN-ON AND CHECKOUT | 3-36 |
| 3.3.1 | Introduction | 3-36 |
| 3.3.2 | Position Confidence Test | 3-37 |
| 3.3.2.1 | Set-up Procedure | 3-38 |
| 3.3.2.2 | TED Position, Local/Remote (Touch Screen Position) | 3-38 |
| 3.3.2.3 | Membrane Hardkey Position, Local/Remote | 3-41 |
| 3.4 | OPERATING PROCEDURES | 3-42 |
| 3.4.1 | Introduction to Procedures | 3-42 |
| 3.4.1.1 | Using the IA/Caller ID Displays | 3-44 |
| 3.4.1.2 | Keying Guidelines | 3-45 |
| | • Audio Routing [A/G and G/G] | 3-45 |
| | • Transmit | 3-47 |
| | • Monitor a Receiver | 3-47 |
| | • Select Main/Standby Radios | 3-48 |
| | • Add or Delete a Frequency | 3-48 |
| | • Hardkey Caller ID Display | 3-48 |
| | • Forward Frequencies | 3-49 |
| | • Cancel Frequency Forward (at the remote position) | 3-49 |
| | • Make an Emergency Transmission (all emergency frequencies) | 3-49 |
| | • Make an Emergency Transmission (single frequency) | 3-50 |
| | • Couple A/G Frequencies to a G/G Line | 3-50 |
| | • Access a Line Using the DA Key | 3-50 |
| | • Access a Line Using the IA Key | 3-51 |
| | • Place a Speed Dial Call | 3-51 |
| | • Place an Auto Ring Call | 3-51 |
| | • Place a Manual Ring Call | 3-51 |
| | • Place a Voice Call | 3-52 |
| | • Release a Call | 3-52 |
| | • Answer an Incoming Call | 3-52 |
| | • Place a Call on Hold | 3-53 |
| | • Release a Call on Hold | 3-53 |
| | • Place a Call on a Dial-up Line | 3-53 |
| | • Make a Public Address Announcement | 3-54 |
| | • Place an SS-1 Call | 3-54 |

# TABLE OF CONTENTS (Continued)

**Section/Paragraph** **Title** **Page**

- Place a DA Intercom Call ..... 3-54
- Place an IA Intercom Call ..... 3-55
- Answer an Intercom Call ..... 3-55
- Place an Override DA Call ..... 3-56
- Place an Override IA Call ..... 3-56
- Release DA & IA Calls ..... 3-56
- Place a Conference Call Using the DA or IA Keys ..... 3-57
- Answer Conference Calls ..... 3-57
- Release Conference Calls ..... 3-58
- Forward All Calls Using Call Forward Key ..... 3-58
- Forward All Calls Using DTMF Keypad ..... 3-59
- Verify Position Call Forward Status ..... 3-59
- Cancel Call Forward [at forwarded position] ..... 3-59
- Monitor a Position Using DA [radio, telephone, and intercom] ... 3-60
- Monitor a Position Using IA ..... 3-60
- Reconfigure the Position ..... 3-61
- Brief [combined or A/G split mode] ..... 3-62
- Split Brief [G/G split mode only] ..... 3-62
- Split Mode [TED or Hardkey] ..... 3-63

3.5 CENTRAL RACK MAINTENANCE POSITION EQUIPMENT ..... 3-63
3.6 SUPERVISORY RECORDER OPERATION ..... 3-65
3.6.1 Recorder Set-up for Operation ..... 3-65
3.6.2 Recorder Operation ..... 3-66

SECTION 4 FUNCTIONAL DESCRIPTION ..... 4-1
4.1 INTRODUCTION TO THE ETVS ..... 4-1
4.1.1 Functional Groups ..... 4-6
4.1.2 System Buses ..... 4-10
4.1.3 Multiplexing Scheme ..... 4-11
4.1.4 Up-link and Down-link MUX Paths ..... 4-14
4.1.5 System Channel Number Assignment ..... 4-16
4.1.6 Cross-Point Switch Control and Channel Switching ..... 4-17
4.1.7 System Software ..... 4-19
4.1.7.1 Initialization ..... 4-19
4.1.7.2 Reconfiguration ..... 4-19
4.1.7.3 Radio Communications ..... 4-24
4.1.7.4 Intercom Communications ..... 4-24
4.1.7.5 Telephone Communications ..... 4-25

# TABLE OF CONTENTS (Continued)

| Section/Paragraph | Title | Page |
|---|---|---|
| 4.1.7.6 | Special Functions | 4-25 |
| 4.1.7.7 | Diagnostic and Maintenance | 4-26 |
| 4.1.8 | Typical ETVS Cluster Functional Description | 4-27 |
| 4.1.9 | 5U Card Cage | 4-28 |
| 4.1.10 | Telephone Card Cage | 4-34 |
| 4.1.11 | Record Audio | 4-36 |
| 4.2 | ETVS SYSTEM ARCHITECTURE | 4-36 |
| 4.2.1 | Configuration and Control Subsystem | 4-39 |
| 4.2.2 | Operator Subsystem | 4-43 |
| 4.2.3 | Telephone Subsystem | 4-47 |
| 4.2.4 | Radio Subsystem | 4-52 |
| 4.2.5 | Position Monitoring Subsystem | 4-54 |
| 4.2.6 | Power Distribution Subsystem | 4-56 |
| 4.2.7 | Alarm Subsystem | 4-60 |
| 4.3 | SYSTEM ALGORITHMS | 4-65 |
| 4.3.1 | Position User Presses a Button | 4-65 |
| 4.3.2 | Position User Selects an Unselected Radio for Transmit Capability | 4-66 |
| 4.3.3 | Position User Selects an Unmonitored Radio for Monitor | 4-67 |
| 4.3.4 | Position User Transmits on a Selected Radio Using the PTT | 4-67 |
| 4.3.5 | A Radio Indicates Incoming Audio (VOX Detect) | 4-68 |
| 4.3.6 | Position User Initiates an Intercom Call Using a DA Key | 4-69 |
| 4.3.7 | Position User Initiates an Intercom Call Using the IA | 4-70 |
| 4.3.8 | Position User Answers an Incoming Intercom Call | 4-71 |
| 4.3.9 | Position User Initiates an Outgoing Call on a Phone with Positive Call Termination (i.e.: ASU or E&M) | 4-71 |
| 4.3.10 | Position User Initiates an Outgoing Call on a PBX Phone | 4-72 |
| 4.3.11 | Position User Initiates an Outgoing Call on an SS-1 Dial-Out Phone | 4-73 |
| 4.3.12 | Position User Initiates an Outgoing Call on an E&M Dial-Out Phone | 4-75 |
| 4.3.13 | Position User Initiates an Outgoing Call on a Dedicated E&M Telephone Line | 4-76 |
| SECTION 5 | UNIT LEVEL FUNCTIONAL DESCRIPTION | 5-1 |
| 5.1 | INTRODUCTION | 5-1 |
| 5.2 | TIMER/MUX AND CLUSTER/MUX UNITS | 5-4 |
| 5.3 | PHONE CONFERENCER (WITH AGC) | 5-11 |
| 5.4 | TELEPHONE INTERFACE CARDS | 5-20 |
| 5.4.1 | PBX 2-wire and 4-wire Interfaces | 5-24 |
| 5.4.2 | ASU Interface | 5-32 |
| 5.4.3 | Phone E&M Interface | 5-39 |

# TABLE OF CONTENTS (Continued)

| Section/Paragraph | Title | Page |
|---|---|---|
| 5.4.4 | SS-1/4 Interface | 5-46 |
| 5.5 | RING GENERATOR UNIT | 5-50 |
| 5.6 | MAINTENANCE ACCESS UNIT | 5-52 |
| 5.7 | RADIO PROCESSOR | 5-59 |
| 5.8 | REMOTE RADIO PROCESSOR | 5-69 |
| 5.9 | PARALLEL CONTROL PROCESSOR | 5-77 |
| 5.10 | ENHANCED OPERATOR PROCESSOR | 5-82 |
| 5.11 | OPERATOR PROCESSOR (SUPERVISORY RECORD) | 5-89 |
| 5.12 | GATEWAY INTERFACE | 5-90 |
| 5.13 | ALARM UNIT | 5-95 |
| 5.14 | HIGH-SPEED DATA LINK | 5-100 |
| 5.15 | REMOTE SERVER COMPUTERS | 5-108 |
| 5.16 | SUPERVISOR AND MAINTENANCE CONFIGURATION TERMINALS | 5-109 |
| 5.17 | GATEWAY COMPUTERS | 5-112 |
| 5.18 | POWER SUPPLIES | 5-116 |
| 5.19 | REMOTE RACK POWER SUPPLY | 5-121 |
| 5.20 | UNINTERRUPTIBLE POWER SUPPLIES | 5-121 |
| 5.21 | SYSTEM ALARM AND REMOTE ALARM PANELS | 5-122 |
| 5.22 | POSITION FUSE PANEL | 5-135 |
| 5.23 | LOW-VOLTAGE DISCONNECT | 5-136 |
| 5.24 | OPERATOR DISTRIBUTION PANEL | 5-141 |
| 5.25 | RADIO DISTRIBUTION PANEL | 5-141 |
| 5.26 | POWER DISTRIBUTION PANEL | 5-141 |
| 5.27 | REMOTE RADIO DISTRIBUTION PANEL | 5-141 |
| 5.28 | OPERATOR POSITION EQUIPMENT | 5-142 |
| 5.28.1 | TED Positions (Type 2) | 5-144 |
| 5.28.1.1 | TED Position Card File | 5-144 |
| 5.28.1.2 | $I^2C$ Distribution Board | 5-147 |
| 5.28.1.3 | Position Audio Board | 5-147 |
| 5.28.1.4 | Jackbox Interface | 5-157 |
| 5.28.1.5 | Pot Module | 5-160 |
| 5.28.1.6 | Touch Entry Device | 5-162 |
| 5.28.2 | Integrated Basic Operator Positions (Type 1) | 5-163 |
| 5.28.2.1 | Position Signal Paths | 5-164 |
| 5.28.2.2 | Integrated Basic Operator Panel (IBOP) | 5-164 |
| 5.28.2.3 | Jackbox Interface | 5-167 |
| 5.28.2.4 | Position Audio Board | 5-168 |
| 5.28.2.5 | Processor Board | 5-170 |

# TABLE OF CONTENTS (Continued)

**Section/Paragraph** **Title** **Page**

5.28.2.6 IA Module ..... 5-174
5.28.3 Mini-Basic Operator Positions (Type 1) ..... 5-177
5.28.3.1 MBOP Position Card File ..... 5-177
5.28.3.2 Mini Basic Operator Panel ..... 5-181
5.29 SPEAKER MODULE ..... 5-181
5.30 JACKBOX ..... 5-185
5.31 POSITION UNIT INTERFACE ..... 5-185
5.32 REMOTE POSITION INTERFACE UNIT ..... 5-191
5.33 SUPERVISORY RECORD INTERFACE ..... 5-197
5.34 MAINTENANCE SPEAKER PANEL ..... 5-199
5.35 SUPERVISOR POSITION PRINTER ..... 5-199
5.36 SUPERVISOR RECORDERS ..... 5-202
5.37 SELECTOR MODULES ..... 5-203
5.38 TRANSIENT SURGE PROTECTOR (OPTIONAL) ..... 5-205
5.39 THERMOSTAT, NORMALLY OPEN, 160°F ..... 5-205

SECTION 6 MAINTENANCE ..... 6-1
6.1 INTRODUCTION ..... 6-1
6.2 ELECTROSTATIC DISCHARGE (ESD) PRECAUTIONS ..... 6-1
6.3 SCHEDULED MAINTENANCE AND SYSTEM PERFORMANCE CHECKS ..... 6-4
6.3.1 Battery Test ..... 6-7
6.3.1.1 Equipment ..... 6-7
6.3.1.2 Battery Test - Part 1 ..... 6-8
6.3.1.3 Battery Test - Part 2 ..... 6-9
6.3.1.4 Battery Test - Part 3 (Fault Isolation) ..... 6-10
6.3.1.5 Full Height Remote Power Rack Battery Removal/Replacement ..... 6-13
6.3.2 Radio Processor/Telephone Interface CCA Performance Checks ..... 6-13
6.3.2.1 Radio Processor ..... 6-15
6.3.2.1.1 Test Equipment and Setup ..... 6-15
6.3.2.1.2 Level Checks ..... 6-16
6.3.2.1.3 Placing Card Back Into Operation ..... 6-18
6.3.2.2 Remote Radio Processor ..... 6-23
6.3.2.2.1 Test Equipment and Setup ..... 6-23
6.3.2.2.2 Level Checks ..... 6-23
6.3.2.2.3 Placing Card Back Into Operation ..... 6-26
6.3.2.3 PBX Interface (4-Wire) ..... 6-30
6.3.2.3.1 Test Equipment and Setup ..... 6-30
6.3.2.3.2 Level Checks ..... 6-31

# TABLE OF CONTENTS (Continued)


| Section/Paragraph | Title | Page |
|---|---|---|
| 6.3.2.3.3 | Placing Card Back Into Operation | 6-33 |
| 6.3.2.4 | PBX Interface (2-Wire) | 6-37 |
| 6.3.2.4.1 | Test Equipment and Setup | 6-37 |
| 6.3.2.4.2 | Level Checks | 6-38 |
| 6.3.2.4.3 | Placing Card Back Into Operation | 6-39 |
| 6.3.2.5 | ASU Interface | 6-44 |
| 6.3.2.5.1 | Test Equipment and Setup | 6-44 |
| 6.3.2.5.2 | Level Checks | 6-45 |
| 6.3.2.5.3 | Placing Card Back Into Operation | 6-46 |
| 6.3.2.6 | E&M Interface | 6-50 |
| 6.3.2.6.1 | Test Equipment and Setup | 6-50 |
| 6.3.2.6.2 | Level Checks | 6-50 |
| 6.3.2.6.3 | Placing Card Back Into Operation | 6-52 |
| 6.3.2.7 | SS-1/SS-4 Interface | 6-57 |
| 6.3.2.7.1 | Test Equipment and Setup | 6-57 |
| 6.3.2.7.2 | Level Checks | 6-58 |
| 6.3.2.7.3 | Placing Card Back Into Operation | 6-61 |
| 6.3.3 | Other Performance Checks | 6-67 |
| 6.3.3.1 | Power Supply Modules (Central Equipment Rack/Full Height Remote Power Rack) | 6-67 |
| 6.3.3.1.1 | Voltage/Current Output Checks | 6-68 |
| 6.3.3.2 | Power Supply Redundancy Test | 6-71 |
| 6.3.3.3 | Low Voltage Disconnect (LVD) Panels | 6-72 |
| 6.3.3.4 | Uninterruptable Power Supplies (UPS) | 6-73 |
| 6.3.3.4.1 | Self-Test | 6-74 |
| 6.3.3.4.2 | Monitoring Status Indicators | 6-74 |
| 6.3.3.5 | End-to-End Audio Performance Check/AGC System Checkout | 6-76 |
| 6.3.3.5.1 | Test Set-up | 6-76 |
| 6.3.3.5.2 | Performance Check | 6-77 |
| 6.3.3.6 | Legal Record Performance Check | 6-82 |
| 6.3.3.6.1 | Test Set-up | 6-82 |
| 6.3.3.6.2 | Performance Check | 6-82 |
| 6.3.3.7 | Post-Installation Position Equipment Power-Up and Initial Testing | 6-84 |
| 6.3.3.8 | Network Date/Time Change Procedure | 6-84 |
| 6.3.3.9 | Position Confidence Test | 6-84 |
| 6.3.3.10 | Central Rack Performance Checks (SCT/MCT Diagnostics) | 6-85 |
| 6.4 | TROUBLESHOOTING | 6-86 |
| 6.4.1 | Maintenance Power-Down/Power-Up Procedures | 6-86 |
| 6.4.1.1 | Power-Down | 6-86 |

# TABLE OF CONTENTS (Continued)


| Section/Paragraph | Title | Page |
|---|---|---|
| 6.4.1.2 | Power-Up | 6-88 |
| 6.4.2 | System Alarms | 6-90 |
| 6.4.2.1 | Position Fuse Panel | 6-91 |
| 6.4.2.2 | Alarm Unit (Central Rack CCA) | 6-92 |
| 6.4.2.3 | System Alarm Panel (SAP) | 6-93 |
| 6.4.2.4 | Remote Alarm Units | 6-95 |
| 6.4.2.5 | System Alarms | 6-95 |
| 6.4.2.6 | Checking Various Components of the System Reporting Network | 6-96 |
| 6.4.3 | Substitution of Modules/Cards | 6-97 |
| 6.4.4 | SCT/MCT Maintenance-Related Functions | 6-97 |
| 6.4.4.1 | System Status Faults | 6-99 |
| 6.4.4.2 | Error and Status Messages | 6-100 |
| 6.4.4.2.1 | SCT Error Messages Displayed in Message Box (Window Popup) | 6-102 |
| 6.4.4.2.2 | Message Displayed in Bottom Line Status Window (Status Bar Indicators) | 6-110 |
| 6.4.4.2.3 | Messages in SCT/MCT Maintenance Log and on SCT/MCT Printing Line | 6-112 |
| 6.4.5 | Supervisor Position (SCT) | 6-115 |
| 6.4.6 | Central Rack Maintenance Position | 6-115 |
| 6.4.7 | Software Network (Gateway) Troubleshooting | 6-115 |
| 6.4.7.1 | Troubleshooting Procedures | 6-116 |
| 6.4.7.2 | Troubleshooting Indicators | 6-117 |
| 6.4.8 | Troubleshooting | 6-124 |
| 6.4.8.1 | Troubleshooting Flowchart Locator Index | 6-124 |
| 6.4.8.2 | Troubleshooting Flowcharts | 6-125 |
| 6.4.9 | Telephone Line Surge Protectors | 6-165 |
| 6.4.9.1 | Tracing Telephone Circuits to Surge Protectors | 6-165 |
| 6.4.9.2 | Checking Condition of Telephone Line Surge Protectors | 6-166 |
| 6.5 | CORRECTIVE MAINTENANCE | 6-166 |
| 6.5.1 | Recommended Maintenance Philosophy | 6-166 |
| 6.5.2 | Replacing Fuses | 6-168 |
| 6.5.2.1 | Replacement Fuses | 6-169 |
| 6.5.3 | Central Rack Card Assembly Replacements | 6-169 |
| 6.5.4 | Replacing a Position LRU | 6-172 |
| 6.5.4.1 | Replacing Card Files in a TED/Mini-BOP | 6-175 |
| 6.5.5 | Replacing the Power Supply Modules (Central Rack) (Versions 1 and 2) | 6-176 |
| 6.5.6 | Replacing the Back-up (Reserve) Power Supply Batteries (Central Equipment Rack and Full Height Remote Power Rack) | 6-176 |

# TABLE OF CONTENTS (Continued)

| Section/Paragraph | Title | Page |
|---|---|---|
| 6.5.7 | Replacing System Alarm Panels (Central Equipment and Full Height Remote Power Racks) | 6-179 |
| 6.5.8 | Replacing a Gateway Computer | 6-179 |
| 6.5.8.1 | Identify and Replace Gateway | 6-180 |
| 6.5.8.2 | Exit Gateway Program | 6-182 |
| 6.5.8.3 | Name the Gateway | 6-182 |
| 6.5.8.4 | Enable File Sharing | 6-183 |
| 6.5.8.5 | Map Network Drive Path | 6-184 |
| 6.5.8.6 | Setting Network Date & Time on Replacement Unit | 6-186 |
| 6.5.8.7 | Setting Computer Name | 6-186 |
| 6.5.8.8 | Checking Out Gateway Operation | 6-187 |
| 6.5.9 | Replacing the Ring Generator (CCA) | 6-187 |
| 6.5.10 | Replacing the Uninterruptable Power Supply (UPS) For SCTs/MCTs, Printer, and Remote Servers | 6-187 |
| 6.5.11 | Replacing the Radio Distribution Panel | 6-188 |
| 6.5.12 | Replacing the Operator Distribution Panel | 6-191 |
| 6.5.13 | Replacing Telephone Line Surge Protectors | 6-204 |
| 6.5.14 | Replacing Remote Position Interface Unit (RPIU) | 6-205 |
| 6.5.14.1 | Central Rack Location | 6-206 |
| 6.5.14.2 | Position/Remote Locations | 6-207 |
| 6.5.15 | Replacing Supervisor Record Position Equipment | 6-207 |
| 6.5.15.1 | Equipment | 6-207 |
| 6.5.15.2 | Removal and Replacement | 6-207 |
| 6.5.16 | Mylar Label Strip Removal and Replacement for Hardkey Positions | 6-210 |
| 6.5.17 | Replacing the SCTs/MCTs | 6-211 |
| 6.5.17.1 | Removal Procedure | 6-211 |
| 6.5.17.2 | Replacement Procedure | 6-212 |
| 6.6 | EQUIPMENT ALIGNMENT/STRAPPING PROCEDURES | 6-214 |
| 6.6.1 | Introduction | 6-214 |
| 6.6.1.1 | Position Equipment Adjustments | 6-215 |
| 6.6.1.2 | $I^2C$ Address Settings for Position Equipment | 6-216 |
| 6.6.1.3 | Alignments for System Power Supplies and Other Units | 6-216 |
| 6.6.2 | CCA Front Panel Adjustments | 6-217 |
| 6.6.2.1 | Diagnostics (DIGN) Hex Switches (e.g., Device Type) | 6-217 |
| 6.6.2.2 | RESET Switches | 6-218 |
| 6.6.2.3 | Potentiometers | 6-218 |
| 6.6.3 | Card Assembly Internal Adjustments | 6-218 |
| 6.6.4 | Factory Pre-Set Adjustments (e.g., Power Supply Module V ADJ, LVD, UPS, etc.) | 6-218 |

# TABLE OF CONTENTS (Continued)


| Section/Paragraph | Title | Page |
|---|---|---|
| 6.6.5 | Alignment/Strapping Step-by-Step Procedures | 6-219 |
| 6.6.5.1 | PBX Interface (4-Wire) | 6-220 |
| 6.6.5.1.1 | Test Equipment and Setup | 6-220 |
| 6.6.5.1.2 | Alignment Procedure | 6-221 |
| 6.6.5.1.3 | Card Replacement | 6-222 |
| 6.6.5.1.4 | Placing Card Back Into Operation | 6-222 |
| 6.6.5.2 | PBX Interface (2-Wire) | 6-226 |
| 6.6.5.2.1 | Test Equipment and Setup | 6-226 |
| 6.6.5.2.2 | Alignment Procedure | 6-227 |
| 6.6.5.2.3 | Card Replacement | 6-230 |
| 6.6.5.2.4 | Placing Card Back Into Operation | 6-230 |
| 6.6.5.3 | Radio Processor | 6-235 |
| 6.6.5.3.1 | Test Equipment and Setup | 6-235 |
| 6.6.5.3.2 | Strapping Information | 6-236 |
| 6.6.5.3.3 | Alignment Procedure | 6-237 |
| 6.6.5.3.4 | Card Replacement | 6-239 |
| 6.6.5.3.5 | Placing Card Back Into Operation | 6-239 |
| 6.6.5.4 | ASU Interface | 6-243 |
| 6.6.5.4.1 | Test Equipment and Setup | 6-243 |
| 6.6.5.4.2 | Alignment Procedure | 6-244 |
| 6.6.5.4.3 | Card Replacement | 6-247 |
| 6.6.5.4.4 | Placing Card Back Into Operation | 6-247 |
| 6.6.5.5 | E&M Telephone Interface | 6-252 |
| 6.6.5.5.1 | Test Equipment and Setup | 6-252 |
| 6.6.5.5.2 | Alignment Procedure | 6-253 |
| 6.6.5.5.3 | Card Replacement | 6-254 |
| 6.6.5.5.4 | Placing Card Back Into Operation | 6-254 |
| 6.6.5.6 | SS-1/SS-4 Interface | 6-258 |
| 6.6.5.6.1 | Test Equipment and Setup | 6-258 |
| 6.6.5.6.2 | Alignment Procedure | 6-259 |
| 6.6.5.6.3 | Card Replacement | 6-260 |
| 6.6.5.6.4 | Placing Card Back Into Operation | 6-260 |
| 6.6.5.7 | Cluster MUX Unit (CMU) (Strapping Procedure only) | 6-264 |
| 6.6.5.7.1 | Test Equipment | 6-264 |
| 6.6.5.7.2 | Strapping Information | 6-264 |
| 6.6.5.7.3 | Placing Card Back Into Operation | 6-265 |
| 6.6.5.8 | Maintenance Access Card (Strapping Procedure only) | 6-266 |
| 6.6.5.8.1 | Test Equipment | 6-266 |
| 6.6.5.8.2 | Strapping Information | 6-266 |

# TABLE OF CONTENTS (Continued)


| Section/Paragraph | Title | Page |
|---|---|---|
| 6.6.5.8.3 | Placing Card Back Into Operation | 6-267 |
| 6.6.5.9 | Timing MUX Unit (Strapping Procedure only) | 6-267 |
| 6.6.5.9.1 | Test Equipment | 6-268 |
| 6.6.5.9.2 | Strapping Procedure | 6-268 |
| 6.6.5.9.3 | Placing Card Back Into Operation | 6-269 |
| 6.6.5.10 | Remote Radio Processor | 6-269 |
| 6.6.5.10.1 | Test Equipment and Setup | 6-270 |
| 6.6.5.10.2 | Alignment Procedure | 6-270 |
| 6.6.5.10.3 | Card Replacement | 6-271 |
| 6.6.5.10.4 | Placing Card Back Into Operation | 6-271 |
| 6.6.5.11 | Remote Position Interface Unit (RPIU) Audio Alignment Procedure | 6-275 |
| 6.6.5.11.1 | Background Information | 6-275 |
| 6.6.5.11.2 | Test Equipment and Setup | 6-276 |
| 6.6.5.11.3 | Audio Alignment Procedure | 6-276 |
| 6.7 | CENTRAL RACK MAINTENANCE DIAGNOSTICS PROCEDURES | 6-279 |
| 6.7.1 | Diagnostics/Performance Checks | 6-279 |
| 6.7.1.1 | SCT/MCT Set-up Procedure | 6-281 |
| 6.7.1.2 | Monitoring Test Procedure | 6-283 |
| 6.7.1.3 | Loopback Test (Diagnostics) | 6-285 |
| 6.8 | RECOMMENDED PACKING INSTRUCTIONS FOR EQUIPMENT BEING SHIPPED TO REPAIR FACILITY | 6-289 |
| 6.8.1 | Circuit Card (CCA) or Similar Assemblies | 6-289 |
| 6.8.2 | Non-Static Sensitive Assembly | 6-290 |
| 6.8.3 | Equipment Size Assemblies | 6-290 |
| 6.8.4 | Materials | 6-290 |
| 6.8.4.1 | Wraps and Cushioning | 6-290 |
| 6.9 | TRANSMISSION LEVEL (TL) TUTORIAL | 6-290 |
| 6.9.1 | Tutorial | 6-291 |
| 6.9.2 | dBm Lookup Chart | 6-293 |
| 6.9.3 | Radio AGC Transmit Adjust Tutorial | 6-293 |
| 6.9.3.1 | Introduction | 6-293 |
| 6.9.3.2 | Functional Description | 6-293 |
| 6.9.3.3 | Record Path | 6-296 |

# TABLE OF CONTENTS (Continued)

**Section/Paragraph** **Title** **Page**

SECTION 7 PARTS LIST ..... 7-1
7.1 INTRODUCTION ..... 7-1
7.2 LIST OF MANUFACTURERS ..... 7-2

APPENDIX A ASSEMBLY DRAWINGS
APPENDIX B GLOSSARY OF TERMS, ABBREVIATIONS, AND ACRONYMS
APPENDIX C SYSTEM STANDARDS AND TOLERANCES
APPENDIX D SYSTEM EXPANSION

***This page intentionally left blank.***

# LIST OF FIGURES


| Figure | Title | Page |
|---|---|---|
| 1-1 | ETVS Family Tree | 1-3 |
| 1-2 | ETVS Relationship of Units | 1-4 |
| 1-3 | ETVS Simplified Block Diagram | 1-9 |
| 2-1 | Typical Floor Plan with Recommended Clearances | 2-11 |
| 3-1 | Example of TED Position Equipment | 3-4 |
| 3-2 | Example of Hardkey IBOP Position Equipment | 3-6 |
| 3-3 | Example of Hardkey MBOP Position Equipment | 3-7 |
| 3-4 | Example of TED Split Position Equipment | 3-11 |
| 3-5 | Example of IBOP Hardkey Split Position Equipment | 3-12 |
| 3-6 | Example of MBOP Split Position Equipment | 3-13 |
| 3-7 | TED Position Speaker Module | 3-14 |
| 3-8 | TED Split Pot Module | 3-15 |
| 3-9 | TED Radio, DTMF Keyset, and Special Function Pages | 3-16 |
| 3-10 | TED Radio Summary, Direct Access, and Special Function Pages | 3-16 |
| 3-11 | Radio Frequency Key Set with Indicators | 3-20 |
| 3-12 | Hardkey Position Speaker Module | 3-22 |
| 3-13 | Hardkey IA Module Display w/Pots | 3-23 |
| 3-14 | Integrated Basic Operator Position (IBOP) Panel | 3-24 |
| 3-15 | Mini-Basic Operator Position (MBOP) Panel | 3-25 |
| 3-16 | DA Selector, 20-Key or 35-Key (20-key shown) | 3-26 |
| 3-17 | Radio Selector | 3-26 |
| 3-18 | Programmable DA Selector | 3-27 |
| 3-19 | Radio Frequency Key Set with Indicators | 3-31 |
| 3-20 | Audio Routing Keys | 3-33 |
| 3-21 | Maintenance Position Assembly, TRACON TED | 3-64 |
| 4-1 | Basic ETVS System Architecture | 4-2 |
| 4-2 | Transmit Audio Path Block Diagram | 4-4 |
| 4-3 | Receive Audio Path Block Diagram | 4-5 |
| 4-4 | Configuration and Control Equipment Group Block Diagram | 4-9 |
| 4-5 | Cluster Channel Data Message Frame | 4-13 |
| 4-6 | Voice Data Bus Word Interleaving | 4-13 |
| 4-7 | Multiplexing Scheme | 4-15 |
| 4-8 | Cross-Point Switch Simplified Diagram | 4-18 |
| 4-9 | Operating System Software Hierarchy | 4-20 |

# LIST OF FIGURES (Continued)

| Figure | Title | Page |
|---|---|---|
| 4-10 | System Functional Block Diagram | 4-27 |
| 4-11 | Card Cage Front and Rear Elevations | 4-30 |
| 4-12 | Rear View of Card Cage Backplane | 4-31 |
| 4-13 | Backplane Edge Connector Configuration | 4-32 |
| 4-14 | Rear View of Backplane Buses and Bus Interconnection | 4-33 |
| 4-15 | Telephone Card Cage Backplane Rear View | 4-35 |
| 4-16 | ETVS System Interfaces Diagram | 4-38 |
| 4-17 | Configuration and Control Subsystem Block Diagram | 4-40 |
| 4-18 | Normal and Split Positions | 4-44 |
| 4-19 | Operator Subsystem Block Diagram | 4-46 |
| 4-20 | Typical Local and Remote Hardkey IBOP Position Installations | 4-48 |
| 4-21 | Typical Local and Remote Hardkey Mini BOP Position Installations | 4-49 |
| 4-22 | Typical Local and Remote TED Position Installations | 4-50 |
| 4-23 | Telephone Subsystem Block Diagram | 4-51 |
| 4-24 | Radio Subsystem Block Diagram | 4-53 |
| 4-25 | Position Monitoring Subsystem Block Diagram | 4-55 |
| 4-26 | Central Rack Power Distribution Subsystem Block Diagram | 4-57 |
| 4-27 | Remote Power Rack | 4-58 |
| 4-28 | Alarm Subsystem Block Diagram | 4-61 |
| 5-1 | TMU/CMU Front Panels | 5-6 |
| 5-2 | MUX Units Input and Output Connections | 5-9 |
| 5-3 | MUX Units Functional Block Diagram | 5-10 |
| 5-4 | Phone Conferencer Front Panel | 5-15 |
| 5-5 | Phone Conferencer Input and Output Connections | 5-17 |
| 5-6 | Phone Conferencer Functional Block Diagram | 5-18 |
| 5-7 | Interface Card Front Panels | 5-21 |
| 5-8 | 2/4W PBX Telephone Interface Input and Output Connections | 5-26 |
| 5-9 | PBX 2- & 4- Wire Interface Functional Block Diagram | 5-27 |
| 5-10 | ASU Telephone Interface Input and Output Connections | 5-34 |
| 5-11 | ASU Functional Block Diagram | 5-35 |
| 5-12 | E&M Telephone Interface Input and Output Connections | 5-42 |
| 5-13 | E&M Functional Block Diagram | 5-43 |
| 5-14 | SS-1/4 Telephone Interface Input and Output Connections | 5-47 |
| 5-15 | SS-1 Functional Block Diagram | 5-48 |
| 5-16 | Ring Generator Front Panel | 5-51 |

# LIST OF FIGURES (Continued)

| Figure | Title | Page |
|---|---|---|
| 5-17 | Ring Generator Input and Output Connections | 5-52 |
| 5-18 | Ring Generator Functional Block Diagram | 5-53 |
| 5-19 | Maintenance Access Unit Front Panels | 5-55 |
| 5-20 | Maintenance Access 2/4-Wire Input and Output Connections | 5-57 |
| 5-21 | Maintenance Access Unit Functional Block Diagram | 5-58 |
| 5-22 | Radio Processor Front Panel | 5-60 |
| 5-23 | Radio Processor Input and Output Connections | 5-62 |
| 5-24 | Radio Processor Functional Block Diagram | 5-64 |
| 5-25 | Radio Processor and Radio Equipment Redundancy | 5-66 |
| 5-26 | Air-to-ground Local and Remote Radio Sidetone Methods | 5-68 |
| 5-27 | Typical Remote Frequency Interlock Scheme | 5-70 |
| 5-28 | Remote Radio Processor Front Panel | 5-71 |
| 5-29 | Remote Radio Processor Input and Output Connections | 5-73 |
| 5-30 | Remote Radio Processor Functional Block Diagram | 5-75 |
| 5-31 | Parallel Control Processor Front Panel | 5-78 |
| 5-32 | Parallel Control Processor Input and Output Connections | 5-80 |
| 5-33 | Parallel Control Processor Functional Block Diagram | 5-81 |
| 5-34 | Enhanced Operator Processor Front Panel | 5-83 |
| 5-35 | Operator Processor Input and Output Connections | 5-85 |
| 5-36 | Enhanced Operator Processor Functional Block Diagram | 5-87 |
| 5-37 | Operator Processor (Supervisory Record) Input and Output Connections | 5-91 |
| 5-38 | Gateway Interface Front Panel | 5-93 |
| 5-39 | Gateway Interface Input and Output Connections | 5-94 |
| 5-40 | Gateway Interface Functional Block Diagram | 5-96 |
| 5-41 | Alarm Unit Front Panel | 5-97 |
| 5-42 | Alarm Unit Input and Output Connections | 5-99 |
| 5-43 | Alarm Unit Functional Block Diagram | 5-101 |
| 5-44 | High-Speed Data Link Front Panel | 5-102 |
| 5-45 | High-Speed Data Link Input and Output Connections | 5-104 |
| 5-46 | Typical High-Speed Data Link Configuration | 5-105 |
| 5-47 | High-Speed Data Link Functional Block Diagram | 5-107 |
| 5-48 | Remote Server Computer | 5-109 |
| 5-49 | Local and Remote SCTs and MCTs | 5-110 |
| 5-50 | Gateway Computer | 5-113 |

# LIST OF FIGURES (Continued)

**Figure** **Title** **Page**

5-51 Gateway Computer Rear View ..... 5-114
5-52 FIFO Interface Block Diagram ..... 5-115
5-53 Power Supply Module (Version 1) Front Panels and Rack Adapter Rear Panel ..... 5-118
5-54 Power Supply Module (Version 2), Front Panel ..... 5-119
5-55 Uninterruptable Power Supply Front and Rear Panels ..... 5-122
5-56 System Alarm Panel Front Panel ..... 5-124
5-57 Remote Alarm Panel Front and Rear Panels ..... 5-124
5-58 System Alarm Panel Rear Panel ..... 5-126
5-59 System Alarm Panel Functional Block Diagram ..... 5-133
5-60 Position Fuse Panel ..... 5-135
5-61 Low Voltage Disconnect Front and Rear Panels ..... 5-139
5-62 Supply Voltage Connect/Disconnect Block Diagram ..... 5-140
5-63 TED Position Cabling ..... 5-145
5-64 TED Position Card File ..... 5-146
5-65 TED $I^2C$ Distribution Board Functional Block Diagram ..... 5-148
5-66 TED Position Audio Board Functional Block Diagram ..... 5-153
5-67 TED Data Routing within the Position ..... 5-154
5-68 TED Jackbox Interface Functional Block Diagram ..... 5-158
5-69 Pot Module Functional Block Diagram ..... 5-161
5-70 IBOP Position Cabling ..... 5-165
5-71 IBOP Position Signal Paths ..... 5-166
5-72 Sub-assemblies of the Basic Operator Panel ..... 5-167
5-73 IBOP Functional Block Diagram ..... 5-169
5-74 IA Module Functional Block Diagram ..... 5-176
5-75 Mini-BOP Position Cabling ..... 5-178
5-76 Mini-BOP Position Card File ..... 5-179
5-77 Mini-BOP $I^2C$ Distribution Board Interfaces ..... 5-180
5-78 Mini-BOP Functional Block Diagram ..... 5-182
5-79 Speaker Module Functional Block Diagram ..... 5-184
5-80 Jackbox Front Panel ..... 5-185
5-81 TED Rear Panel ..... 5-186
5-82 IBOP Rear Panel ..... 5-186
5-83 MBOP Rear Panel ..... 5-187
5-84 IA Module Rear Panel ..... 5-187
5-85 Speaker Module Rear Panel ..... 5-188

# LIST OF FIGURES (Continued)


| Figure | Title | Page |
|---|---|---|
| 5-86 | Pots Module Rear Panel | 5-188 |
| 5-87 | Jackbox Rear Panel | 5-188 |
| 5-88 | Radio Selector Rear Panel | 5-189 |
| 5-89 | DA Selector (20-key) Rear Panel | 5-190 |
| 5-90 | DA Selector (35-key) Rear Panel | 5-190 |
| 5-91 | Programmable DA Selector | 5-191 |
| 5-92 | Remote Position Interface Unit and Front Panel | 5-192 |
| 5-93 | Remote Position Interface Unit Functional Block Diagram | 5-196 |
| 5-94 | Supervisor Record Interface Front and Rear Panels | 5-197 |
| 5-95 | Supervisor Record Interface Functional Block Diagram | 5-200 |
| 5-96 | Optional Maintenance Speaker Panel Front Panel | 5-201 |
| 5-97 | SCT/MCT Printer | 5-202 |
| 5-98 | Selector Modules Block Diagram | 5-204 |
| 6-1 | Static-Safe LRU Replacement, Typical Setup | 6-2 |
| 6-2 | Static-Safe Work Bench, Typical Setup | 6-3 |
| 6-3a | Radio Processor Performance Check Block Diagram (Transmit Path) | 6-19 |
| 6-3b | Radio Processor Performance Check Block Diagram (Receive Path) | 6-20 |
| 6-4a | Remote Radio Performance Check Block Diagram (Transmit Path) | 6-26 |
| 6-4b | Remote Radio Performance Check Block Diagram (Receive Path) | 6-27 |
| 6-5a | PBX Interface (4-Wire) Performance Check Block Diagram (Transmit Path) | 6-33 |
| 6-5b | PBX Interface (4-Wire) Performance Check Block Diagram (Receive Path) | 6-34 |
| 6-6a | PBX Interface (2-Wire) Performance Check Block Diagram (Transmit Path) | 6-40 |
| 6-6b | PBX Interface (2-Wire) Performance Check Block Diagram (Receive Path) | 6-41 |
| 6-7a | ASU Interface Performance Check Block Diagram (Transmit Path) | 6-47 |
| 6-7b | ASU Interface Performance Check Block Diagram (Receive Path) | 6-48 |
| 6-8a | E&M Performance Check Block Diagram (Transmit Path) | 6-53 |
| 6-8b | E&M Performance Check Block Diagram (Receive Path) | 6-54 |
| 6-9a | SS-1/SS-4 Performance Check Block Diagram (Transmit Path) | 6-62 |
| 6-9b | SS-1/SS-4 Performance Check Block Diagram (Receive Path) | 6-63 |
| 6-10 | SCT/MCT Indicator Icons and Status Bar | 6-102 |

# LIST OF FIGURES (Continued)

| Figure | Title | Page |
|---|---|---|
| 6-11 | System Reported Faults: Radio Reports Down | 6-128 |
| 6-12 | System Reported Faults: Conferencer Reports Down | 6-129 |
| 6-13 | System Reported Faults: Remote Radio Reports Down | 6-130 |
| 6-14 | System Reported Faults: Supervisory Record Reports Down | 6-131 |
| 6-15 | System Reported Faults: CMU Reports Down | 6-132 |
| 6-16 | System Reported Faults: TMU Reports Down | 6-133 |
| 6-17 | System Reported Faults: Gateway Interface/Alarm Processor/Parallel I/O Reports Down | 6-134 |
| 6-18 | System Reported Faults: Phone Card Reports Down and All Phones Assigned to a Particular Conference Pair Are Reporting Down | 6-135 |
| 6-19 | System Reported Faults: High-Speed Data Links (HSDL) Report Down | 6-136 |
| 6-20 | System Reported Faults: SCT Indicates “Operator Interface Down” | 6-137 |
| 6-21 | SCT Icon Reportable: Reserve Power, TEMP, and UPS Icons Red | 6-140 |
| 6-22 | SCT Icon Reportable: Power Supply Icon Red/Main Power Icon Green | 6-141 |
| 6-23 | SCT Icon Reportable: SCT Network PC Icon Turns White | 6-142 |
| 6-24 | SCT Icon Reportable: Fuse Alarm Icon Red | 6-143 |
| 6-25 | User Reported Faults: Illumination/Video Problems | 6-146 |
| 6-26 | User Reported Faults: Problems With Volume Control | 6-148 |
| 6-27 | User Reported Faults: No Position Audio | 6-149 |
| 6-28 | User Reported Faults: SCT Problems | 6-153 |
| 6-29 | User Reported Faults: M/S TX/RX Selector Problems | 6-154 |
| 6-30 | User Reported Faults: Remote Alarm/SAP Problems | 6-155 |
| 6-31 | User Reported Faults: Supervisory Record Problems | 6-156 |
| 6-32 | User Reported Faults: Door Release Problems | 6-157 |
| 6-33 | User Reported Faults: IA Display Problems | 6-158 |
| 6-34 | User Reported Faults: Problems With PTT | 6-159 |
| 6-35 | User Reported Faults: Keys Do Not Respond (Hardkey/TED Positions) | 6-160 |
| 6-36 | User Reported Faults: Remote Radio PTT Problems | 6-163 |
| 6-37 | User Reported Faults: Power Supply Operation Out of Tolerance | 6-164 |
| 6-38 | Radio Distribution Panel | 6-189 |
| 6-39 | Operator Distribution Panel | 6-193 |

# LIST OF FIGURES (Continued)


| Figure | Title | Page |
|---|---|---|
| 6-40 | Power Distribution Panel | 6-197 |
| 6-41a | PBX Interface (4-Wire) Alignment Block Diagram (Transmit Path) | 6-223 |
| 6-41b | PBX Interface (4-Wire) Alignment Block Diagram (Receive Path) | 6-224 |
| 6-42a | PBX Interface (2-Wire) Alignment Block Diagram (Balancing/Transmit Level Path) | 6-231 |
| 6-42b | PBX Interface (2-Wire) Alignment Block Diagram (Receive Path) | 6-232 |
| 6-42c | PBX Interface (2-Wire) Alignment Block Diagram (On Site [Real Line] Balancing) | 6-233 |
| 6-43a | Radio Processor Alignment Block Diagram (Transmit Path) | 6-240 |
| 6-43b | Radio Processor Alignment Block Diagram (Receive Path) | 6-241 |
| 6-44a | ASU Interface Alignment Block Diagram (Balancing/Transmit Level Path) | 6-248 |
| 6-44b | ASU Interface Alignment Block Diagram (Receive Path) | 6-249 |
| 6-44c | ASU Interface Block Diagram (On Site [Real Line] Balancing) | 6-250 |
| 6-45a | E&M Alignment Block Diagram (Transmit Path) | 6-255 |
| 6-45b | E&M Alignment Block Diagram (Receive Path) | 6-256 |
| 6-46a | SS-1/SS-4 Alignment Block Diagram (Transmit Path) | 6-261 |
| 6-46b | SS-1/SS-4 Alignment Block Diagram (Receive Path) | 6-262 |
| 6-47a | Remote Radio Processor Alignment Block Diagram (Transmit Path) | 6-272 |
| 6-47b | Remote Radio Processor Alignment Block Diagram (Receive Path) | 6-273 |
| 6-48 | RPIU Audio Alignment Block Diagram | 6-277 |
| 6-49 | Central Rack Maintenance Position Equipment (TRACON TED) | 6-280 |
| 6-50 | Diagnostic Dialog Box for Position Monitoring Test | 6-284 |
| 6-51 | SCT/MCT Dialog Box for Position Loopback Test Mode | 6-287 |
| 6-52 | Radio Transmit Paths (AGC and Non-AGC) | 6-295 |
| 6-53 | AGC Compression Region/Normalization of Input Range | 6-295 |

# LIST OF FIGURES (Continued)

| Figure | Title | Page |
|---|---|---|
| A-1 | Jumper/Switch Locations: TMU | A-3 |
| A-2 | Jumper/Switch Locations: CMU | A-5 |
| A-3 | Jumper/Switch Locations: Phone Conferencer with Differential | A-7 |
| A-4 | Jumper/Switch Locations: PBX, 2W (Telephone Interface) | A-9 |
| A-5 | Jumper/Switch Locations: PBX, 4W (Telephone Interface) | A-11 |
| A-6 | Jumper/Switch Locations: ASU Line Card (Telephone Interface) | A-13 |
| A-7 | Jumper/Switch Locations: E&M Line Card (Telephone Interface) | A-15 |
| A-8 | Jumper/Switch Locations: Maintenance Access Unit | A-17 |
| A-9 | Jumper/Switch Locations: Radio Processor | A-19 |
| A-10 | Jumper/Switch Locations: Remote Radio Processor | A-21 |
| A-11 | Jumper/Switch Locations: Parallel Control Processor | A-23 |
| A-12 | Jumper/Switch Locations: Operator Processor with Differential (25 MHz) | A-25 |
| A-13 | Jumper/Switch Locations: Operator Processor Split with Differential (25 MHz) | A-27 |
| A-14 | Jumper/Switch Locations: Gateway Interface | A-29 |
| A-15 | Jumper/Switch Locations: Alarm Unit | A-31 |
| A-16 | Jumper/Switch Locations: SS-1/SS-4 | A-33 |
| A-17 | Basic ETVS System 1 (BS-1); Racks 1 and 2; Front, Side, and Rear Views (2 sheets) | A-35 |
| A-18 | Basic ETVS System 2 (BS-2); Racks 1-3; Front, Side, and Rear Views (3 sheets) | A-37 |
| A-19 | Basic ETVS System 3 (BS-3); Racks 1-4; Front, Side, and Rear Views (4 sheets) | A-40 |
| A-20 | Basic ETVS System 4 (BS-4); Racks 1-7; Front, Side, and Rear Views (7 sheets) | A-44 |
| A-21 | Rack Assembly, ETVS, Remote Power, 4-Position | A-51 |
| A-22 | Central Rack Maintenance Position Equipment (Hardkey) (optional) | A-52 |
| A-23 | TED Hinged and Wedge Configurations | A-53 |

# LIST OF TABLES


| Table | Title | Page |
|---|---|---|
| 1-1 | Reference Data | 1-17 |
| 1-2 | Test Equipment | 1-20 |
| 1-3 | Common Name Equipment List (including firmware) | 1-22 |
| 1-4 | List of Support Documentation | 1-27 |
| 2-1 | Typical Computer Software Components (CSC) Inventory | 2-5 |
| 2-2 | $I^2C$ Addresses (of Devices with Hex Switch) | 2-6 |
| 3-1 | TED Key Functions | 3-17 |
| 3-2 | Hardkey Position Key Functions | 3-28 |
| 3-3 | Key Attributes | 3-34 |
| 3-4 | Indirect Access Codes | 3-35 |
| 3-5 | A/G and G/G Audio Routing Procedures | 3-45 |
| 3-6 | Radio Operating Procedures | 3-47 |
| 3-7 | Interphone Operating Procedures | 3-50 |
| 3-8 | Basic Intercom Operating Procedures | 3-54 |
| 3-9 | Intercom Override Operating Procedures | 3-56 |
| 3-10 | Conference Call Operating Procedures | 3-57 |
| 3-11 | Call Forward Operating Procedures | 3-58 |
| 3-12 | Position Monitor Mode Operating Procedures | 3-60 |
| 3-13 | Position Reconfiguration Procedure | 3-61 |
| 3-14 | Instructor/Trainee Intercom [Brief] Procedure | 3-62 |
| 3-15 | Split Mode Operation | 3-63 |
| 4-1 | TLCSC Functions | 4-21 |
| 4-2 | TLCSC Functional Assignments | 4-22 |
| 4-3 | ETVS Basic System Configurations | 4-37 |
| 4-4 | Basic System Power Supply Requirements | 4-56 |
| 5-1 | MUX Units Front Panel Controls and Indicators | 5-7 |
| 5-2 | Timer/MUX Unit Strapping | 5-7 |
| 5-3 | Cluster/MUX Unit Strapping | 5-8 |
| 5-4 | Phone Conferencer Front Panel Controls and Indicators | 5-16 |
| 5-5 | Phone Conferencer Unit Strapping | 5-16 |
| 5-6 | Telephone Interface Cards Front Panel Controls and Indicators | 5-23 |
| 5-7 | PBX 2-Wire Telephone Device Type | 5-25 |
| 5-8 | PBX 4-Wire Telephone Device Type | 5-25 |
| 5-9 | PBX 2-Wire & 4-Wire Telephone Interface Strapping | 5-26 |
| 5-10 | ASU Telephone Device Type | 5-33 |

# LIST OF TABLES (Continued)

| Table | Title | Page |
|---|---|---|
| 5-11 | ASU Telephone Interface Strapping | 5-33 |
| 5-12 | E&M Telephone Device Type | 5-39 |
| 5-13 | E&M Telephone Interface Strapping | 5-40 |
| 5-14 | SS-1 Telephone Device Type | 5-46 |
| 5-15 | SS-1 Telephone Interface Strapping | 5-46 |
| 5-16 | Maintenance Access Unit Front Panel Controls and Indicators | 5-54 |
| 5-17 | Maintenance Access Unit Strapping | 5-56 |
| 5-18 | Radio Processor Front Panel Controls and Indicators | 5-61 |
| 5-19 | Radio Processor Unit Strapping | 5-63 |
| 5-20 | Remote Radio Processor Front Panel Controls and Indicators | 5-72 |
| 5-21 | Remote Radio Processor Unit Strapping | 5-74 |
| 5-22 | Parallel Control Processor Controls and Indicators | 5-79 |
| 5-23 | Parallel Control Processor Unit Strapping | 5-79 |
| 5-24 | Enhanced Operator Processor Front Panel Controls and Indicators | 5-84 |
| 5-25 | Enhanced Operator Processor Unit Strapping | 5-84 |
| 5-26 | ISDN Channel Allocation | 5-86 |
| 5-27 | Supervisory Record ISDN Channel Allocation | 5-90 |
| 5-28 | Operator Processor (Supervisory Record) Unit Strapping | 5-90 |
| 5-29 | Gateway Interface Front Panel Controls and Indicators | 5-92 |
| 5-30 | Gateway Interface Strapping | 5-92 |
| 5-31 | Alarm Unit Front Panel Controls and Indicators | 5-98 |
| 5-32 | Alarm Unit Strapping | 5-98 |
| 5-33 | High-Speed Data Link Front Panel Controls and Indicators | 5-100 |
| 5-34 | High-Speed Data Link Unit Strapping | 5-103 |
| 5-35 | Power Supply (Versions 1 and 2) Front Panel Controls and Indicators | 5-118 |
| 5-36 | Power Supply Rack Adapter Rear Panel Input and Output Connections | 5-120 |
| 5-37 | System Alarm Panel Controls and Indicators, Central and Remote Racks | 5-125 |
| 5-38 | System Alarm Panel Input and Output Connections | 5-127 |
| 5-39 | System Alarm Panel Strapping | 5-132 |
| 5-40 | Low Voltage Disconnect Front Panel Controls and Indicators | 5-137 |
| 5-41 | Low Voltage Disconnect Input and Output Connections | 5-140 |
| 5-42 | Position Audio Board Input and Output Connections | 5-150 |
| 5-43 | CPS Data Stream ST6/ST18 Channel Allocation | 5-155 |
| 5-44 | Jackbox Interface Input and Output Connections | 5-157 |
| 5-45 | Pot Module Input and Output Connections | 5-161 |
| 5-46 | BOP Input and Output Connections | 5-170 |

# LIST OF TABLES (Continued)

| Table | Title | Page |
|---|---|---|
| 5-47 | IA Module Input and Output Connections | 5-174 |
| 5-48 | Speaker Module Input and Output Connections | 5-183 |
| 5-49 | Speaker Module Board Strapping | 5-184 |
| 5-50 | Remote Position Interface Unit Controls and Indicators | 5-193 |
| 5-51 | Remote Position Interface Unit Input and Output Connections | 5-193 |
| 5-52 | Supervisory Record Interface Input and Output Connections | 5-198 |
| 6-0a | Index of System Performance Checks and Scheduled Preventive Maintenance Actions | 6-5 |
| 6-0b | Radio Processor/Telephone Interface CCA Performance Checks | 6-13 |
| 6-1 | Radio Processor Audio Level Performance Check Setup | 6-16 |
| 6-2 | Radio Processor Performance Check Worksheet | 6-21 |
| 6-3 | Radio Processor VOX Detection Performance Check Worksheet | 6-22 |
| 6-4 | Remote Radio Audio Level Performance Check Setup | 6-23 |
| 6-5 | Remote Radio Processor Performance Check Worksheet | 6-28 |
| 6-6 | Remote Radio Processor VOX Detection Performance Check Worksheet | 6-29 |
| 6-7 | PBX Interface (4-Wire) Audio Level Performance Check Setup | 6-31 |
| 6-8 | PBX Interface (4-Wire) Performance Check Worksheet | 6-35 |
| 6-9 | PBX Interface (4-Wire) VOX Detection Performance Check Worksheet | 6-36 |
| 6-10 | PBX Interface (2-Wire) Audio Level Performance Check Setup | 6-37 |
| 6-11 | PBX Interface (2-Wire) Performance Check Worksheet | 6-42 |
| 6-12 | PBX Interface (2-Wire) VOX Detection Performance Check Worksheet | 6-43 |
| 6-13 | ASU Interface Audio Level Performance Check Setup | 6-45 |
| 6-14 | ASU Interface Performance Check Worksheet | 6-49 |
| 6-15 | E&M Audio Level Performance Check Setup | 6-50 |
| 6-16a | E&M Performance Check Worksheet | 6-55 |
| 6-16b | E&M Tone Generation/Detection Performance Check Worksheet | 6-56 |
| 6-17 | SS-1/SS-4 Audio Level Performance Check Setup | 6-58 |
| 6-18 | SS-1/SS-4 Performance Check Worksheet | 6-64 |
| 6-19 | SS-1/SS-4 VOX Detection Performance Check Worksheet | 6-65 |
| 6-20 | SS-1/SS-4 Tone Generation/Detection Performance Check Worksheet | 6-66 |
| 6-21 | Error Messages | 6-101 |
| 6-22 | TMU/CMU Cards Troubleshooting Indicators | 6-118 |
| 6-23 | Phone Conferencer Card Troubleshooting Indicators | 6-118 |
| 6-24 | Telephone Interface Cards Troubleshooting Indicators | 6-119 |

# LIST OF TABLES (Continued)

| Table | Title | Page |
|---|---|---|
| 6-25 | Radio Processor Card Troubleshooting Indicators | 6-119 |
| 6-26 | Operator Processor Card Troubleshooting Indicators | 6-120 |
| 6-27 | Alarm Unit Troubleshooting Indicators | 6-120 |
| 6-28 | Gateway Interface Troubleshooting Indicators | 6-121 |
| 6-29 | Remote Radio Processor Troubleshooting Indicators | 6-121 |
| 6-30 | Maintenance Access Unit Troubleshooting Indicators | 6-122 |
| 6-31 | High-Speed Data Link Troubleshooting Indicators | 6-122 |
| 6-32 | Ring Generator Troubleshooting Indicators | 6-122 |
| 6-33 | Parallel Control Processor Troubleshooting Indicators | 6-123 |
| 6-34 | Remote Position Interface Unit Troubleshooting Indicators | 6-123 |
| 6-35 | System Alarm Panel Troubleshooting Indicators | 6-124 |
| 6-36 | Troubleshooting Flowchart Locator Index | 6-126 |
| 6-37 | List of Replacement Fuses | 6-169 |
| 6-38 | Power Distribution Panel #1 | 6-199 |
| 6-39 | Power Distribution Panel #2 | 6-200 |
| 6-40 | Power Distribution Panel #3 | 6-202 |
| 6-41 | $I^2C$ Addresses (of Devices with Hex Switch) | 6-216 |
| 6-42 | PBX Interface (4-Wire) Audio Alignment Setup | 6-220 |
| 6-43 | PBX Interface (4-Wire) Alignment Worksheet | 6-225 |
| 6-44 | PBX Interface (2-Wire) Audio Alignment Setup | 6-227 |
| 6-45 | PBX Interface (2-Wire) Alignment Worksheet | 6-234 |
| 6-46 | Radio Processor Audio Alignment Setup | 6-236 |
| 6-47 | ETVS Default Jumper Settings (Radio Processor) | 6-236 |
| 6-48 | Radio Processor Site-Specific Jumper Settings | 6-237 |
| 6-49 | Radio Processor Alignment Worksheet | 6-242 |
| 6-50 | ASU Audio Alignment Setup | 6-244 |
| 6-51 | ASU Interface Alignment Worksheet | 6-251 |
| 6-52 | E&M Audio Alignment Setup | 6-252 |
| 6-53 | E&M Alignment Worksheet | 6-257 |
| 6-54 | SS-1/SS-4 Audio Alignment Setup | 6-259 |
| 6-55 | SS-1/SS-4 Alignment Worksheet | 6-263 |
| 6-56 | ETVS Default Jumper Settings (CMU) | 6-264 |
| 6-57 | CMU Site-Specific Jumper Settings | 6-265 |
| 6-58 | ETVS Default Jumper Settings (Maintenance Access Unit) | 6-267 |
| 6-59 | ETVS Default Jumper Settings (TMU) | 6-268 |
| 6-60 | TMU Site-Specific Jumper Settings | 6-269 |

# LIST OF TABLES (Continued)

| Table | Title | Page |
|---|---|---|
| 6-61 | Remote Radio Processor Audio Alignment Setup | 6-270 |
| 6-62 | Remote Radio Processor Alignment Worksheet | 6-274 |
| 6-63 | Lookup Chart: dBm0 to dBm | 6-293 |
| 6-64 | Transmit Path as Affected by AGC | 6-294 |
| 7-1 | PARTS LIST | 7-3 |
| C-1 | System Standards and Tolerances | C-2 |

# SECTION 1.

# GENERAL INFORMATION

## 1.1 INTRODUCTION

This manual provides descriptive data, installation instructions, and maintenance procedures for the DENRO Enhanced Terminal Voice Switch (identified as the ETVS, or system, throughout this manual). The ETVS is a software configurable modular voice switching system; adaptable to the requirements of most Air Traffic Control, Voice Control, and Integrated Communication Switching environments.

DENRO supplies five basic rack configurations, each designed to accommodate a certain maximum number of ports based on the size of the system. They are identified as basic systems (BS) 1 through 4. Paragraph 4.2 defines BS port capacities and paragraph 4.2.6 defines power requirements.

Each BS configuration provides the racks and cabling necessary to support the maximum anticipated installation. The customer can install the equipment required to support current needs with the assurance that the BS chosen for the site will support expansion to the maximum anticipated level simply by adding the desired voice circuit interfaces and associated external cabling. Each BS comes with power supply capacity to support full implementation of the delivered configuration.

## 1.2 SYSTEM DESCRIPTION

The ETVS is a non-blocking, fully-integrated, digital voice communications system. System design allows operators to communicate with each other and establish communications between the radio, telephone and interphone voice paths served by the system. Microprocessor-controlled interfaces connect the radio, telephone, and interphone voice circuits to the system. Each voice interface processor manages access to a maximum of 480 audio channels in BS 1-4 on a Time Division Multiplexed (TDM) digital voice data bus (VDB) network. A redundant Carrier Sense Multiple Access with Collision Detection (CSMA/CD) control data bus (CDB), based on IEEE 802.3 topology and protocol, interconnects all processors.

The system consists of position (console) equipment, rack-mounted interface and control equipment, system configuration and control equipment, and maintenance equipment. **Figure 1-1** defines the family tree for the ETVS.

The following equipment families listed in **Figure 1-1** are installed in the central rack:

Interface

- Voice/Data Switching
- DC Power
- Reserve Power
- Operator Processors (under operator position equipment in **Figure 1-1**)
- Operator Distribution Panels (under operator position equipment in **Figure 1-1**)
- Maintenance and Diagnostics
- Central Rack to Terminal Interface

The following equipment families listed in **Figure 1-1** are peripheral to the central rack:

- Operator Position Equipment
- Remote Terminal [Supervisor Configuration Terminal (SCT) or Maintenance Configuration Terminal (MCT)]
- Supervisory Configuration/Maintenance Control (except Operator Processor and Operator Distribution Panel)
- Remote Position Power Rack

**Figure 1-2** illustrates the relationship of units in the ETVS. The number of racks, positions, legal recorders, and configuration terminals depends on the size of the system.

The central rack contains all the signal processing, interface, and distribution equipment necessary to switch the radio channels and telephone circuits connected to the system. The racks also contain the system power supplies and reserve power batteries.

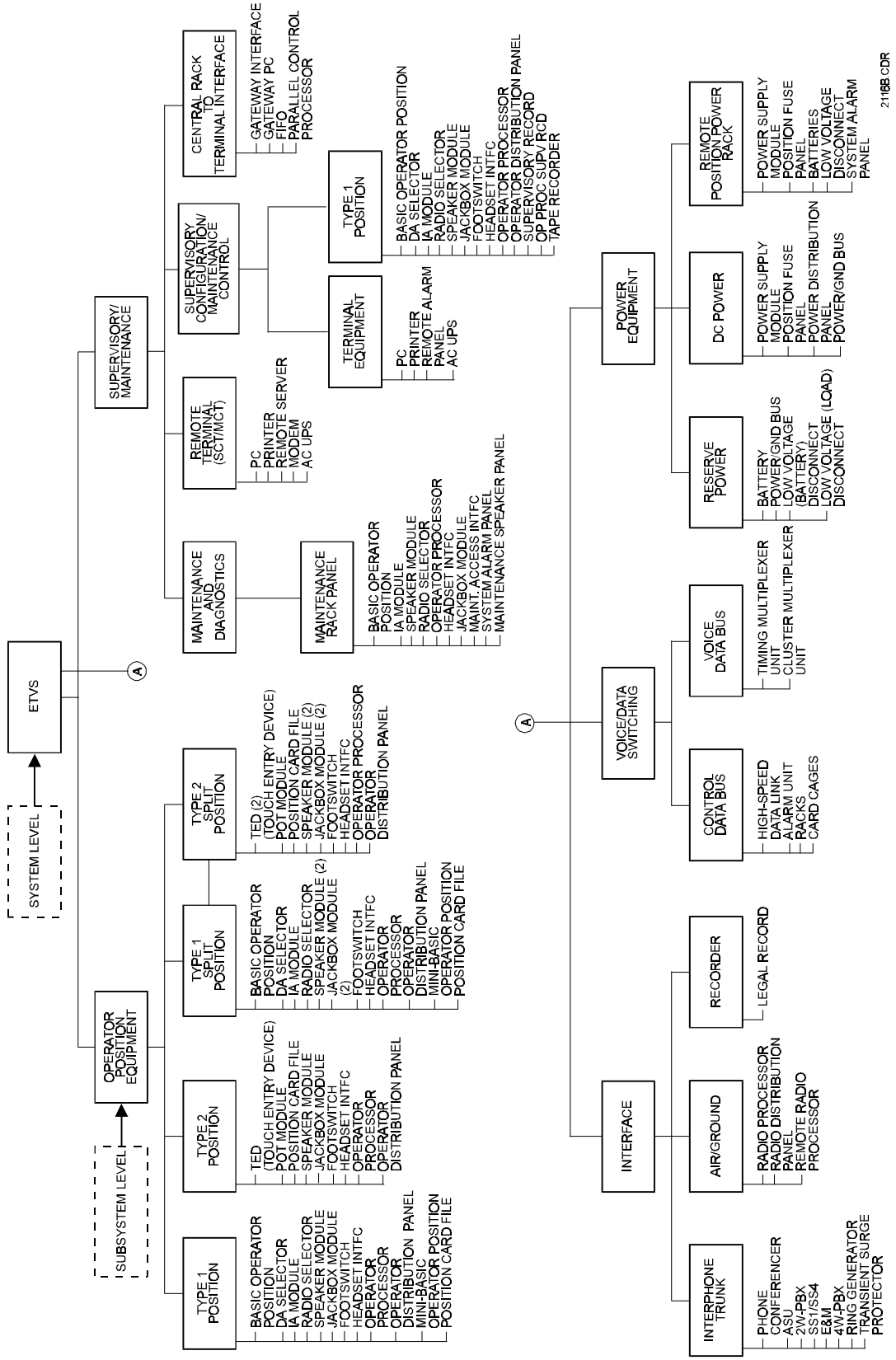


*Figure 1-1. ETVS Family Tree*

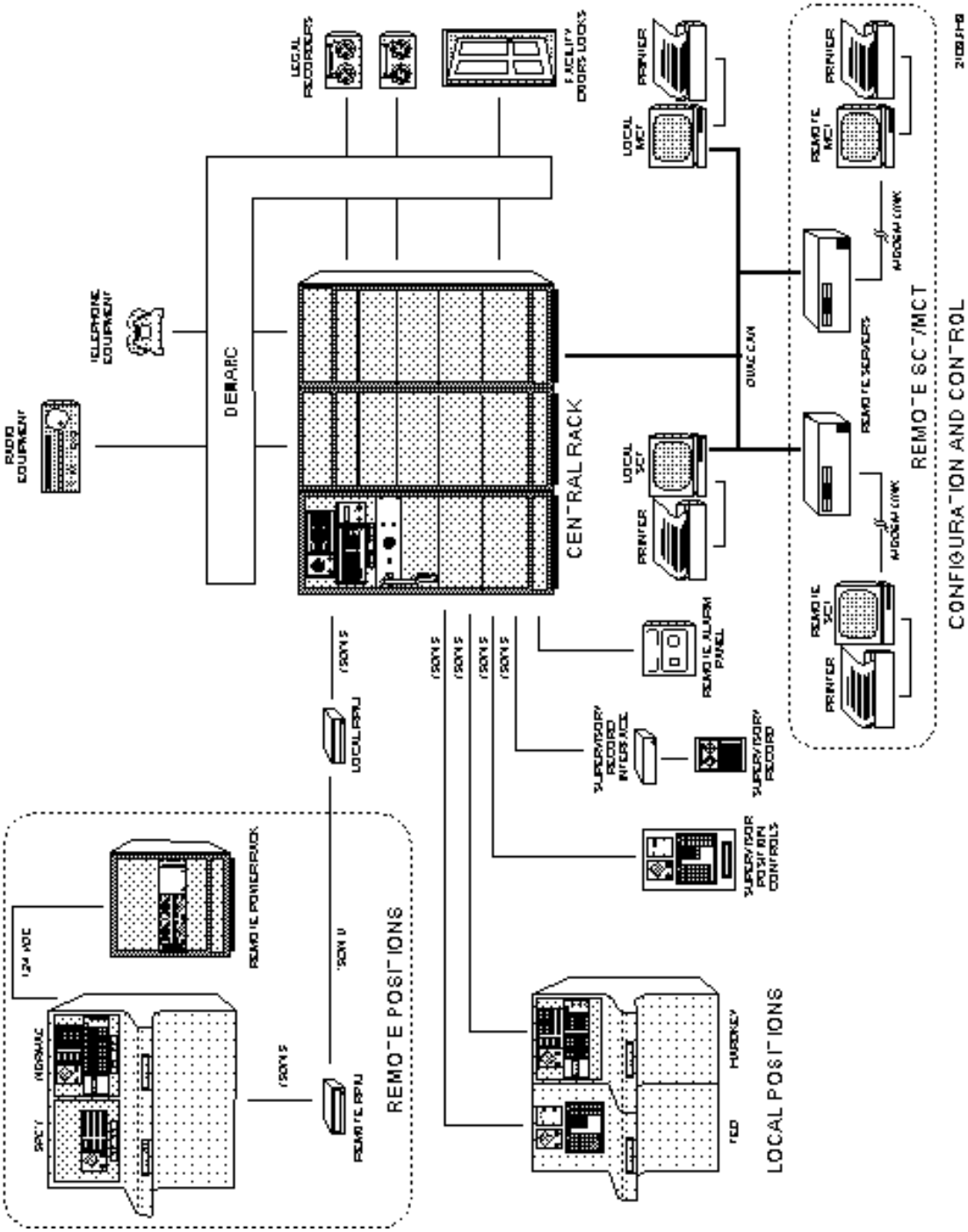


*Figure 1-2. ETVS Relationship of Units*

The configuration and control equipment includes the SCTs, MCTs, and associated printers and uninterruptable power supplies (UPS). It also includes the Remote Servers that extend the subsystem to remote configuration terminals via telephone modems. The SCTs, MCTs and Remote Servers are computers running Windows software. The number of configuration terminals depends on the size of the system and the site requirements. The configuration terminals and Remote Servers sit on a dual LAN that connects to the central rack equipment at a Gateway Computer located in the central rack.

Position equipment may consist of hardkey modules or touch entry devices (TED). A hardkey position has membrane hardkey (referred to in this manual as hardkey) switch modules for radio/telephone/intercom access and special functions, speaker modules, indirect access (IA) and caller ID display capabilities, and a telephone DTMF keypad.

A TED position has a touch screen with selectable displays for radio/telephone/intercom access and special functions in place of the hardkeys. The operational requirements of the site determine the type and quantity of equipment installed at a particular position and the total number of positions.

Local and remote positions provide operator control of the system. At sites with operator positions located remote to the central rack, a remote position power rack, co-located with the positions, provides remote position power. The rack houses redundant power supplies and reserve power battery backup. Remote Position Interface Units (RPIU) connect the remote positions with the central rack.

A card file contains the electronics that support a TED position. Hardkey positions either have a mini-basic operator panel (MBOP) and a card file similar to that at a TED position, or an integrated basic operator panel (IBOP) that contains the position electronics. An Inter-integrated Circuit ($I^2C$) bus interconnects the IBOP with the other modules at the position. An $I^2C$ bus also connects the card file with the other position modules at MBOP positions.

Each system has a TRACON TED (or IBOP hardkey) position located in the central rack for maintenance purposes. The maintenance position is a standard operator position with telephone and radio selection. This position also has a Maintenance Speaker Panel to which audio signals may be patched from the front panels jacks of central rack interface and processor cards for monitoring purposes.

In addition to an SCT, the supervisor position has a complete operator position, supervisory record facilities, and a Remote Alarm Panel. Facility door access can be controlled and monitored from the positions.

## 1.3 FEATURES AND FUNCTIONS

The major features of the ETVS include:

a) **Modular Architecture.** All the ETVS building blocks (operator, telephone, and radio processors; intercom, radio and telephone selectors; and power supplies) are modular. Additionally, the software is modular. The ETVS software is composed of unique microprocessor programs. All unique programs run simultaneously in the system. This feature supports the ETVS basic system build philosophy.

b) **Total Non-Blocking.** The ETVS architecture provides sufficient bus capacity and bandwidth to permit access to any circuit during maximum system loading by an operator.

c) **Fully Distributed Processing.** The ETVS architecture provides a dedicated microprocessor at each operator position, at each operator voice link, for each radio and telephone control circuit, for alarm reporting, for tone generation, for cluster and system timing and multiplexing, and configuration control. Redundant (main/standby) microprocessors are provided at all system critical processing points.

d) **Central Rack Reserve Power.** The ETVS provides uninterruptable power via maintenance free batteries. Each BS is configured with the number of batteries required for twenty minutes of battery backup. Power supplies are configured to provide redundancy; if any one power supply fails, the remaining power supply module(s) has sufficient output to power the system. Battery maintenance and handling requirements appear in Section 6.

e) **Multi-Channel Voice Recording.** All audio interfaces (operator, radio and telephone) have a legal record circuit that is ported to a legal recorder.

f) **Local and Remote Configuration Terminals.** Both local and remote configuration terminals can be used to configure and monitor the system. A Remote Server provides connectivity to the system Local Area Network (LAN) for each remote terminal. The configuration terminals are part of the configuration and control equipment.

   All SCTs, MCTs, and remote servers receive their power from stand-alone UPSs that are independent of the system power supply. Each UPS reports its operating status to the terminal it powers.

g) **Electronic Reconfiguration**. Software installed in the configuration and control equipment enables supervisory and maintenance personnel to reconfigure the system when required. Reconfiguration ranges from the reprogramming of a single selector at a position to the reprogramming of the entire system.

h) **Automatic Fault Detection and Display.** The configuration and control equipment automatically detects and reports failures at the LRU level, including central rack units, data bus, fuse, power supply, and reserve power levels. Additionally, self diagnostics are provided at each operator position. System faults are recorded in a maintenance log and initiate an alarm indication (visual and audible) at a System Alarm Panel and a Remote Alarm Panel.

i) **Remote Radio Interface.** The remote radio interface permits operator access to customer-furnished radio equipment remote to the system site. The system ports the radio communication, along with E&M or SF signaling, via a 4-wire trunk that serves as the link to the remote radios.

j) **Position Types.** Three position types can be used to control the system. For consoles with limited space, the MBOP arrangement can be used. For larger consoles, the IBOP can be used. Liquid Crystal Display (LCD) touch screen-type positions are also available.

k) **Local and Remote Positions.** Both local and remote position interface is available for all types of positions. Remote positions can be located up to 15,000 feet from the central rack. Remote positions require a remote power rack for the UPS to the position equipment. Local positions can be up to 500 feet from the central rack.

l) **Position Monitoring.** Supervisors can use this feature to monitor audio activity at selected positions and record this activity. It also permits operators to monitor one other selected position or a supervisor position. However the supervisor can activate a privacy feature to prevent being monitored.

m) **Maintenance Position.** A maintenance position, installed in the central rack, assists the technician in troubleshooting the system. The position consists of TED TRACON position equipment and a Maintenance Speaker Panel that can be patched to central rack units with front panel audio jacks for monitoring purposes. (Note: Some systems may have IBOP hardkey (vice TED) position equipment.)

n) **Diagnostics.** The system supports two diagnostics modes:

Position confidence test that an operator performs on the position when required. Position indicators, keys, and signal paths are tested.

Maintenance loop back that is set up at the SCT and enables a technician to test the transmit and receive signal paths between the maintenance position headset and the position configured for loopback.

o) **Maintenance Patching.** By configuring the desired channel to be ported to the front panel jacks of the Maintenance Access unit at the SCT, the technician can monitor the channel by patching it to the Maintenance Speaker Panel.

## 1.4 FUNCTIONAL DESCRIPTION

Although the system capabilities vary from site to site, the basic system functional operation is the same. A simplified functional block diagram is shown in **Figure 1-3**.

Customer radio, telephone, and legal record circuits terminate at demarc blocks from which they are connected to the central rack equipment. Operator positions connect directly to the central rack equipment; a demarc tie point is not used. Maintenance personnel can operate the system from a maintenance position located in the central rack.

Operator and radio lines connect to the central rack equipment at distribution panels. Radio and radio record lines connect at Radio Distribution Panels. Operator and operator record lines connect at Operator Distribution panels. Each Operator Distribution Panel connects up to 16 operator positions and the associated legal record. Telephone and telephone record lines connect directly to the Telephone Interfaces.

Radio and telephone I/O is analog as are the legal record signals. Operator I/O is digital over ISDN links. Position legal record is analog.

Radio Processor cards provide the central rack interface for radio voice, Operator Processor cards for operator voice, and Telephone Interface cards for telephone voice. Each Telephone Interface handles one telephone line and communicates over a serial telecommunications (ST) bus with a Phone Conferencer that processes up to 30 telephone lines. The processors, including the Phone Conferencer, are represented in the illustration by the box labeled Operator, Radio, Telephone Processors.

The Radio Processors, Operator Processors, and Phone Conferencers communicate multiplexed digital voice signals of the intelligence they process as serial data streams over up-links to the Timer/MUX units. The Timer/MUX units further multiplex the streams and port them to the 8-bit parallel voice data bus down-link.

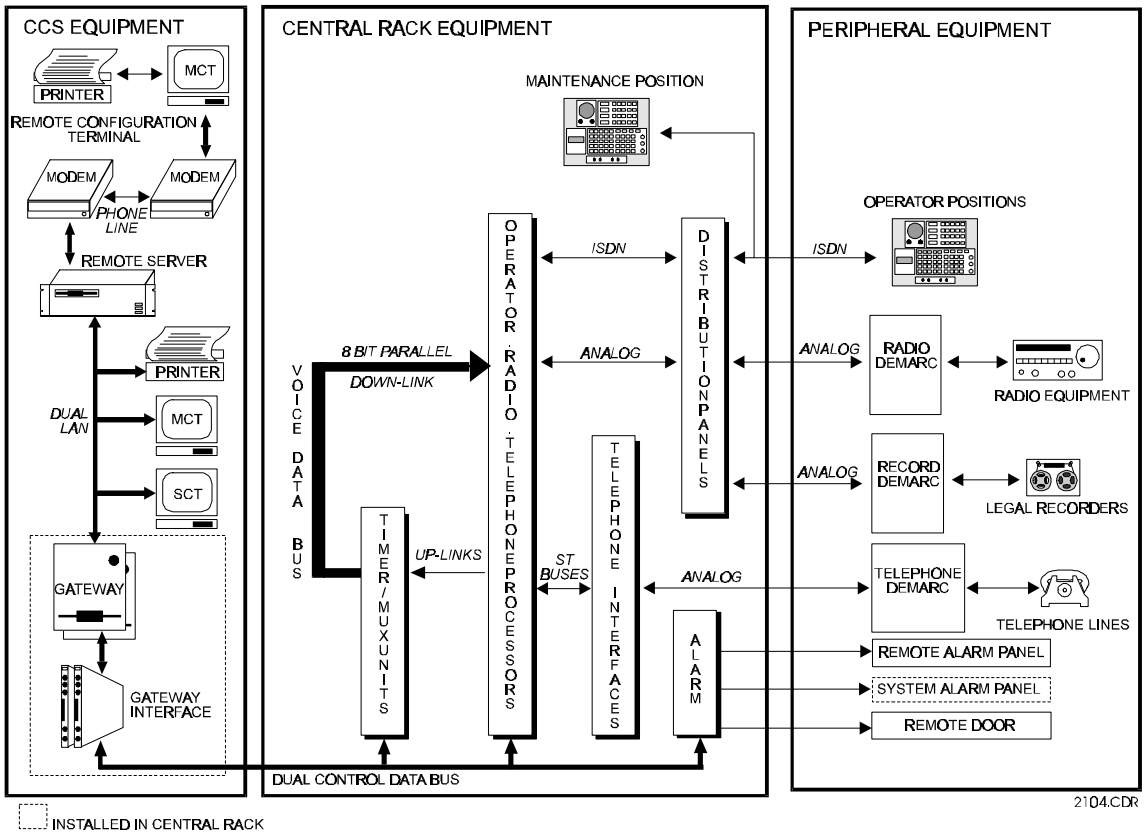


***Figure 1-3. ETVS Simplified Block Diagram***

The positions are configured with direct access (DA) and indirect access (IA) controls for establishing telephone communications, plus special function keys that support features such as call conferencing and call forwarding. DA and IA keys may also be configured for selecting interphone circuits and intra-facility intercom channels that provide position-to-position communications with override capabilities for emergencies or critical communications. Telephone interfaces are available to port PBX (2-wire and 4-wire), ASU, E&M, and SS-1/SS-4 type telephone lines to the system.

The operator uses radio controls for frequency selection, push-to-talk (PTT) keying, frequency monitoring, and main/standby transmitter/receiver selection. The emergency frequency feature provides a direct interface to a select number of transmitter and receiver frequencies. By pressing a single key, the operator can seize a particular radio frequency (channel) or group of frequencies for emergency communications.

The system ports all radio, telephone, and operator audio activity to customer-furnished legal recorders. In addition, recorders located at the Supervisor positions record the audio

activity of selected positions. Maintenance personnel may also monitor the audio activity of selected positions at the maintenance position speaker.

A key press at the position initiates communication with the operator. The system recognizes the resultant switch closure and establishes a connection between the operator and the selected radio or telephone device. Mic audio from the position is converted into a digital form for transmission to the central rack. An integrated services digital network (ISDN) links the positions to the central rack equipment. At the central rack the operator processor for the selecting position processes the signal and the TMU (or CMU) places it in the appropriate channel on the voice data bus. The selected device processor picks it off the voice data bus and transmits it via the associated device port.

The radio or telephone receive audio signal is routed through the associated device processor. The device processor digitizes the signal and places it into time slots on the up-link to the CMU. The CMU places the cluster on to the voice data bus. The operator processor picks off the associated signal from the audio bus and routes it to the position. At the position, the digitized signal is converted back to analog and applied to the receive audio circuits.

The legal recorders record all audio activity at the positions. Legal record audio is sent to the central rack as an analog signal and is distributed to the recorders through the operator distribution panels.

The Configuration and Control Subsystem (CCS) equipment designates the operator position functions and the system configuration through system software programs installed in the SCTs and MCTs. The SCT, serving as a supervisor workstation, provides a means to reallocate the system assets through menu-driven modes of configuration. The CCS also constantly monitors the status of the system, sounding an alarm should a failure be noted. The MCT displays the type of failure and its location. An optional traffic data collection program provides data on calls entering, leaving, and circulating within the system, allowing assessment of the system configuration and performance.

The configuration terminals (SCT and MCT) are computers that run the system configuration programs. These terminals function as supervisor and maintenance workstations. The computer terminals provide user interface to establish system configuration, monitor operational status, and perform maintenance functions. They

can be located local to the central rack or remotely via Remote Servers and a telephone line. A Remote Server and a telephone line is required for each remote terminal.

The local SCTs and MCTs, and the Remote Servers, reside on a dual LAN that is interfaced with the dual control data bus in the central rack. Each LAN connects to an Ethernet port at a Gateway Computer in the central rack. The Gateway Computers are connected to Gateway Interface cards that interface the Gateway I/O with the dual control data bus. The control data bus enables all cards in the central rack with microprocessors to communicate with each other and with the CCS equipment via the Gateway Interfaces and Gateway Computers.

The Gateway Computer contains the system operating software and current configuration map. SCTs are not required once a map is down-loaded to the Gateway Computer; once configured all control resides within the central rack in response to commands from the positions.

An alarm subsystem reports alarms received from the System Alarm Panel to the CCS over the control data buses and the LANs. The same alarms are indicated at the System Alarm Panel and the Remote Alarm Panels. This subsystem also monitors the facility doors and provides control interface to the door locks.

## 1.5 CONFIGURATION

The system provides a flexible capacity of multiple-operator consoles and communication channels for fixed installations. The system flexibility is achieved through the use of a modular concept. Each major circuit is contained on a separate module. Therefore, the system capacity, as well as the operating configuration, depends on the particular site requirements.

Card cages are used in the central equipment racks to house the signal processing equipment. Circuit cards installed in the card cages provide the circuitry for channel switching, signal processing, and system control. The backplanes of the card cages form the interconnection between the processors, telephone interfaces, and in/out cabling. The audio bus forms part of each card cage backplane.

## 1.6 EQUIPMENT DESCRIPTION

The following paragraphs provide a functional description of the major equipment employed in the system. This equipment is further described and illustrated in Sections 3 and 5.

### 1.6.1 Central Rack Equipment

a) **Multiplexer Units.** The multiplexers comprise the timer-multiplexer units (TMU) and the cluster multiplexer units (CMU). The TMU functions as a master system clock and a cluster multiplexer. It is the source for all clock signals required for voice-data multiplexing. The CMU is identical to the TMU except it is slaved to the TMU for its timing requirements.

b) **Telephone Conferencer.** The telephone conferencer multiplexes incoming calls received over the telephone lines it serves (up to 30) into time slots on the cluster stream to the TMU/CMU. It also demultiplexes outgoing calls by accessing data from the specific time slots reserved for the telephone lines on the 480-channel audio bus. It also monitors the status of the Telephone Interfaces it serves and reports the status of each to the SCT. With AGC adapter installed, the telephone conferencer provides received audio automatic gain control (AGC) for the 30 phone channels interfacing with the conferencer. AGC can also be turned on and off individually on a “per channel” basis..

c) **Telephone Interfaces.** The telephone interfaces adapt the receive analog voice and call processing signals of one telephone line to the digital ST input/output requirements of the phone conferencer. The interfaces also translate the transmit digital audio signal to analog and condition it to the associate telephone line. The following are telephone interfaces: PBX 2-wire, PBX 4-wire, ASU, E&M, and SS-1/SS-4.

d) **Radio Processor.** The radio processor interfaces the analog signal line of a transmitter and receiver with the digital signal processing requirements of the system. The Radio Processors provide radio main/standby switching capability and, when installed in pairs, radio audio processor redundancy.

e) **Remote Radio Processor.** The remote radio processor interfaces the analog signal line of a 4-wire E&M-like telephone trunk with the digital signal processing requirements of the system. The trunk links the radio processor in the local system with a similar card in a remote system with access to radio equipment.

f) **Operator Processor.** The operator processor interfaces the voice data, tone data, and control data of one operator position with the central equipment. It communicates with the position over one or two ISDN links for normal and split positions respectively.

g) **Supervisory Record.** The system hardware includes an operator processor that provides an ISDN output, via the Supervisory Record Interface, to tape recorders located at the supervisory positions. Firmware on the card dedicates the card to processing audio activity from selected positions.

h) **High-Speed Data Link.** For large systems using more than 80 processors, an HSDL card is used to reduce bus loading caused by multiple processors sharing the same control data bus.

i) **System Alarm Panel.** In the central rack, the system alarm panel provides visual and audible indication of system alarms received by the SCT and Alarm card. It also indicates the operating status of the reserve power batteries. At remote power racks, it provides alarm indications of the power supply and emergency battery power supply status.

j) **Remote Alarm Panels.** Each remote position can be equipped with a Remote Alarm Panel. The panel displays the same alarm indications as the System Alarm Panel. It receives alarm information directly from the System Alarm Panel.

k) **Low-Voltage Connect/Disconnect Panels.** Depending on system requirements, the low-voltage disconnect panel is used to automatically disconnect the power supplies from the load until the input DC voltage reaches a preset level and/or automatically disconnects the battery from the load when the battery voltage drops below a preset level. The latter is to protect the battery from a complete discharge.

l) **Remote Power Racks.** If the system has remote positions, they receive their power from +27.5 VDC, 125-amp power supply modules in this rack. The rack also provides emergency power backup for up to 20 minutes from a pair of batteries.

m) **Central Rack Power.** The modular power supplies in the central rack provide +27.5 VDC at 125 amps. Each BS contains sufficient power supply modules to provide redundancy to the particular BS hardware configuration. Batteries installed at the base of each central rack support the system for 20 minutes in the event of a power failure.

n) **Ring Generator.** The ring generator provides the 20-Hz ringing voltage for the applicable telephone circuits. The ring generator is installed on a circuit card that fits into a telephone card cage slot.

### 1.6.2 Configuration and Control Subsystem

The Gateway Computers, Gateway Interfaces, and the Alarm Unit, reside in the central rack but are functionally part of the CCS.

**a) Gateway Computer.** The Gateway Computer stores and implements the system configuration database and interfaces the CCS LAN with the Gateway Interface. An Ethernet card in the Gateway Computer provides a port connection for the CCS LAN. The Gateway Interface card provides interface

with the control data bus. Windows 3.11 for WorkGroups is the Gateway Computer's operating system software. The central rack contains two Gateway Computers and two Gateway Interface cards to support the redundant CCS LANs and control data buses.

b) **Alarm Unit.** The alarm unit monitors the integrity of the control data buses and the operating status of all interfaces in the system and reports this information to the SCT.

c) **Gateway Interfaces.** The gateway interfaces interconnect the system-wide control data buses with the Gateway Computers.

d) **Configuration Terminals.** The configuration terminals (SCTs and MCTs) are computers that provide the user interface for system configuration and maintenance support. They can be installed local to, or remote from, the central rack. Local terminals run Windows 3.11 for WorkGroups and remote terminals run Windows 95. Remote Servers extend the LAN communications to the remote terminals via telephone modems. Each terminal has a printer that prints out system status messages. The configuration terminal and printer receive power from a dedicated uninterruptable power supply (UPS).

e) **Remote Servers.** A Remote Server, and a telephone line, provide the LAN extension to each remote SCT and MCT. The Remote Servers run Windows NT.

f) **Uninterruptable Power Supplies.** All CCS SCTs, MCTs, and Remote Servers receive power from dedicated uninterruptable power supplies (UPS). The UPS can power a configuration terminal from its internal battery for at least 20 minutes.

### 1.6.3 Position Equipment

a) **Integrated Basic Operator Position Panel (IBOP).** The IBOP contains the DA switch keys, DTMF keypad and the position audio controls. Both normal and split positions use the IBOP

b) **Mini-Basic Operator Position Panel (MBOP).** The MBOP is similar to the IBOP but has fewer programmable keys for DA switches. Both normal and split positions use the MBOP.

c) **Touch Entry Device.** The LCD touch entry device (TED) may be used in place of the conventional position hardkey switches. The TED emulates pushbutton-type line selection, special function, and dial pad keys. For operator facilities with high ambient light, the LCD is available in a higher intensity backlighted version.

d) **Position Card File.** TED and MBOP positions require position card files to house the position electronics. They are located at the position console and receive their power from the central rack, or remote power rack at remote positions. The card file contains the position audio circuitry and a single board computer that manages all position control. The TED card file also contains a video control board for the LCD display.

e) **Radio Selectors.** The radio selectors provide for individual selection of radio channels; an LCD display provides a readout of the channel (frequency) selected. The supervisor programs the frequency keys at the SCT. The operator can control radio main/standby selection from this selector.

f) **DA Selectors.** The DA selectors permit the operator to select telephone or intercom lines by pressing a single button. The supervisor programs the DA keys at the SCT. These keys can also be programmed to execute system functions such as initiating a conference.

g) **Programmable DA Selector.** Standard DA selectors require identification labels on each key. This selector has LCD display windows next to each key that can be configured to display the key name. The panel has only 4 selectors.

h) **Pot Module.** TED positions require a pot module to control volume at the position headsets. A split module performs this task at split positions for both the normal and split-operator jackboxes.

i) **IA Module.** Hardkey positions use IA modules to display the current IA call in progress and the ID of incoming calls if the line supports caller ID. The previous 20 calls can be viewed. The arrow keys scroll the displays. IA and caller ID information appears in an IA/caller ID display within the TED screen.

j) **Speaker Modules.** The speaker assemblies allow selected audio signals to be monitored at the speaker. Front panel controls permit volume adjustment.

k) **Split-Speaker Module.** The split-speaker is an additional speaker installed at a split position to provide loudspeaker audio of telephone communications.

l) **Jackbox.** The jackbox functions as an interface between the headsets/handsets and the position audio circuits.

m) **Footswitch.** This switch provides the radio push-to-talk (PTT) function at the position.

n) **Remote Position Interface Unit (RPIU).** A remote operator position requires an RPIU at each end of an ISDN U link so that it can be located up to 15,000 feet from the central rack. The units match the normal ISDN S porting at the Operator Processor in the central rack and position with the ISDN U format of the link.

o) **Supervisory Record Interface.** Converts the ISDN record signal from the Operator Processor (Supervisory Record) to an analog signal that is fed to the supervisory position tape recorders.

p) **Supervisor Recorder.** Records the position audio activity monitored at any selected position. The Operator Processor (Supervisory Record) processes the selected position's audio and outputs it on an ISDN link to the Supervisory Record Interface unit at the supervisory position.

### 1.6.4 Remote Power Rack

a) **Remote Rack Power.** Each of the modular supplies in the remote power rack provide +27.5 VDC. The rack contains two power supply modules if it powers 4 positions or less. With a third module installed, the rack can power up to 16 positions. Two batteries provide reserve power for up to 20 minutes.

b) **System Alarm Panel.** In the remote power rack, the system alarm panel provides alarm indications of the power supply and emergency battery power supply status and rack overheat.

c) **Low Voltage Disconnect Panel.** Automatically disconnects the batteries from the load, when the battery voltage drops below a preset level, to prevent the batteries from completely discharging.

## 1.7 EQUIPMENT SPECIFICATION DATA

**Table 1-1** lists the operational characteristics and requirements of the system.

## *Table 1-1. Reference Data*

| GENERAL DATA | |
|---|---|
| Capabilities | 480 channels in any combination of landline, intercom and radio |
| Landline (telephone) | 480 channels in any combination of landline, intercom and radio; any one or combination of PBX/(C.O.), 4-wire/2-wire, E&M signaling, ringdown, ASU (LDL), SS-1/SS-4 |
| Intercom | Position-to-Position |
| Radio | Transmit, receive, monitor, PTT, main/standby transmitter/receiver switching, remote radio lockout/override |
| Record | Position Telephone and Radio Audio |

| FUNCTIONAL CHARACTERISTICS | | | |
|---|---|---|---|
| Configuration and Control | Single or multiple workstations (terminals); report generation to screen | | |
| | a) Reconfiguration: | individual position or entire system | |
| | b) System monitoring: | automatically detects and reports failures | |
| Interfaces | (Receive values based on -10dBm at the RCD output 0TL points. Transmit values based on -10dBm at the jackbox 0TL point. Specific levels are based on the TLs in parentheses. Refer to TL Tutorial in paragraph 6.9.) | | |
| | PBX | Interfaces with common carrier services, 2-wire or 4-wire hybrid termination | |
| | | 2-wire | 4-wire |
| | Receive: | (-6 TL) -16 dBm +1 | (-16 TL) -26 dBm +1 |
| | Transmit: | (-3 TL) -13 dBm +1 | (0 TL) -10 dBm +1 |
| | (Public address) | | -10 dBm +1 |
| | VOX | -22 dBm0 (on) | -22 dBm0 (on) |
| | | -28 dBm0 (off) | -28 dBm0 (off) |
| | 20 Hz signaling in, DTMF or dial pulse out | | |
| | ASU | Interfaces with (telephone set) | |
| | 2-wire telephone lines | | |
| | Receive: | (0 TL) | -10 dBm +1 |
| | Transmit: | (-12 TL) | -22 dBm +1 |
| | Output signals: | | manual/auto ring |
| | Input signals: | | Talk battery -48V |
| | SS-1 | Interfaces with tone signaling | |
| | 4-wire telephone lines (SS-1/SS-4) | | |
| | Receive: | (-16 TL) | -26 dBm +1 |

## *Table 1-1. Reference Data (Continued)*

| | | | | |
|---|---|---|---|---|
| Interfaces (Continued) | | | | |
| | | Transmit: (0 TL) | | -10 dBm +1 |
| | | VOX | -22 dBm0 (on) | -28 dBm0 (off) |
| | | Output signals: 2400/2600 Hz | | -8 dBm0±2 |
| | E&M (4/6/8 W) | Interfaces with dedicated services 4-wire voice call or SF E&M signaling | | |
| | | Receive: (-16 TL) | (Interphone) | -26 dBm +1 |
| | | | (Interphone LINCS) | -10 dBm +1 |
| | | Transmit: (0 TL) | (Interphone LINCS) | -10 dBm +1 |
| | | Input signals: | VOX detect, E-Lead detect | |
| | | Device signaling: | voice in/voice out, signal in/signal out | |
| | | SF Frequencies 2400/2600 Hz | | |
| | Radio | Interfaces with separate radios and transmitters, 4-wire | | |
| | | Receive: | Remote (-9 TL)<br>Local (0 TL) | -19 dBm +1<br>-10 dBm +1 |
| | | Transmit: | Remote (0 TL)<br>Local (0 TL) | -10 dBm +1<br>-10 dBm +1 |
| | VOX | Remote | -25 dBm0 (on) | -31 dBm0 (off) |
| | | Local | -28 dBm0 (on) | -34 dBm0 (off) |
| | | PTT output signals: | | closure, 24V |
| | | AGC | Constant transmit level of 0 dBm0 over the audio level range of -25 dBm0 to +3 dBm0 | |
| | AGC | (Automatic Voice Level Regulation) Maintain level within ±1.5 dB of –10 dBm0 @voice frequencies (1004 Hz); nominal threshold –18 dB, adjustable in 3-dB steps to –21 dB or -15 dB | | |
| | Legal Record | Transmit Level (0 TL) | | -10 dBm +1 |
| The above input and transmit TL levels are adjustable within the following ranges: | | | | |
| | | Receive: -16 TL to +12 TL<br>Transmit: +12 TL to -16 TL | | |
| Voice Channel Characteristics | | Frequency Response: 300 -3000 Hz, +1.0 to -0.5 dB | | |
| | | Crosstalk Isolation: | greater than 66 dB | |
| | | Noise: | less than 20 dBrnC | |
| | | Impulse Noise: | no more than 1 hit above 47 dBrnC in 30 minutes | |

## *Table 1-1. Reference Data (Continued)*

| | | | | |
|---|---|---|---|---|
| Voice Channel Characteristics (Continued) | | | | |
| | | Return loss: | | |
| | | 2-wire: | echo >28 dB | |
| | | | single frequency >14 dB | |
| | | 4-wire: | 200 – 500 Hz <20 dB | |
| | | | 500 – 3400 Hz <26 dB | |
| Power Requirements | | | | |
| | Version 1: | Central Rack/Remote Power Rack: | | |
| | | 30 A at 240 VAC (±15%), 60 Hz ±6%, single phase | | |
| | | DC output: 125 A at +27.5 VDC | | |
| | Version 2: | Central Rack/Remote Power Rack: | | |
| | | 25A at 240 VAC (±15%), 60 Hz ± 6%, single phase | | |
| | | DC output: 125A at 27.5 VDC | | |
| Environmental Characteristics | | | | |
| | | Operating Temperature: | | 10 – 40-degrees C |
| | | Humidity: | | 10 to 80% (non-condensing) |
| | | Altitude: | | up to 10,000 feet above sea level |
| | | Non-Operating Temperature | | -20 to +70-degrees C |
| | | Humidity: | | 0 to 100% (with condensation) |
| | | Altitude: | | up to 50,000 feet above sea level |
| Limitations | | | | |
| | | Cable Lengths: | | |
| | | a) Configuration terminals: | | 500 feet |
| | | b) Positions: | Local: | 500 feet |
| | | | Remote: | 15,000 feet |
| | | c) Power: (source & load) | | 500 feet |

## 1.8 EQUIPMENT AND ACCESSORIES SUPPLIED

The type and quantity of the equipment supplied is dependent on the system configuration. Refer to the site documentation for your site and the basic system rack elevations in Appendix A. This equipment includes extender cards and the Maintenance Speaker patch cord as identified in **Table 1-2**.

## 1.9 EQUIPMENT REQUIRED BUT NOT SUPPLIED

All required operational equipment is supplied with the system. Test equipment is the only equipment required that is not supplied with the system. Refer to **Table 1-2** for a listing of the recommended test equipment.

***Table 1-2. Test Equipment***

| Qty | Model* | Manufacturer | Nomenclature |
|---|---|---|---|
| 2 | 4934A | Hewlett Packard | Transmission Test Set** |
| 1 | 8840A or 77 | Fluke | Digital VOM |
| 1 | 120933-001*** | DENRO | 4U Extender Card |
| 1 | 110311-001 | DENRO | Impedance Matching Test Adapter |
| 1 | N/A | N/A | Stopwatch or wrist watch |
| 2 | 610394-001 | DENRO | Test Cable no. 1 |
| 2 | 610394-002 | DENRO | Test Cable no. 2 |
| 1 | 610400-201 | DENRO | 600-ohm load |
| 1 | 540018-001 | DENRO | ESD-Protective Wrist Strap |
| 1 | 540018-003 | DENRO | Wrist strap, ESD protection, w/6-ft. cord |
| 1 | 611049-060 | DENRO | Cable Assembly |
| 1 | TCMB | Xcelite | Technician's Tool Kit |
| 1 | WE-310 to Bantom Plug, Two Conductor Cable | Pomona | Patch cord (Maint. Speaker) |
| 1 | 8275 | GL Electronics | Alignment Tool |

* Or equivalent

** TIMS = Transmission Impairment Measuring Set

*** Supplied

## 1.10 ETVS DOCUMENTATION

This manual supplies all information necessary to support the operation and maintenance of the ETVS, to the LRU level.

Section 1 is an executive overview of the ETVS and supporting documentation.

Section 2 provides general installation information.

Section 3 describes the position equipment (including the maintenance position), its controls and indicators, and operational procedures. Maintenance operational procedures that use system status and alarm equipment appear in Section 6.

Section 4 introduces the basic concepts of the DENRO switch and the subsystems of the ETVS.

Section 5 contains brief functional descriptions of the DENRO designed units supported by controls and indicators information, pinout and strapping data, and functional block diagrams. A brief description of each vendor unit is also included.

Section 6 introduces the maintenance philosophy and provides scheduled maintenance procedures, troubleshooting guides, and corrective maintenance instructions to support it.

Section 7, the parts list, includes all line replaceable items. Hardware units that require firmware installation to configure the unit to perform its function in the system are identified by a 325xxx kit number. The kit includes the basic circuit card assembly plus the necessary firmware installed in the appropriate locations on the assembly card.

Appendix A includes component location drawings, board strapping, and rack elevations of the basic systems.

A glossary of terms is listed in Appendix B.

Standards and Tolerances are provided in Appendix C.

Appendix D (System Expansion) provides procedures for adding operator, telephone, and radio interfaces after the system has been installed.

Table 1-3 includes a common usage to parts list (Table 7-1) nomenclature cross reference. The common usage names used throughout the text of this manual are those found on the front panel of the equipment. In some instances the term unit, processor, interface, phone or radio has been added to the front panel name to make it more descriptive. The cross reference also includes firmware nomenclature where relevant.

## *Table 1-3. Common Name Equipment List (including firmware)*

| Item | Common Usage/ Front Panel Name | P/L Name | Part Number | Assembly/ Firmware Part Number |
|---|---|---|---|---|
| ***Rack-Mounted Equipment*** | | | | |
| 1. | Timer Multiplexer Unit/TMU | Kit, CCA, TMU, Black | 325962-001 | Unit, 120962-001<br>F/W U55, 312923-001<br>F/W U68, 312923-002 |
| 2. | Cluster Multiplexer Unit/CMU | Kit, CCA, CMU, Black | 325960-001 | Unit, 120960-001<br>F/W U27, 312923-003 |
| 3. | Phone Conferencer/Conferencer | Kit, CCA, Tel Conf | 325935-001 | Unit, 120935-001<br>F/W U56, 312923-019<br>F/W U75, 312923-020<br>F/W U76, 312923-006<br>F/W U88, 312923-005 |
| | Phone Conferencer with AGC/Conferencer | Kit, CCA, Tel Conf | 325935-008 | Unit, 120935-004<br>F/W U56, 312923-019<br>F/W U75, 312923-020<br>F/W U76, 312923-006<br>F/W U88, 312923-005 |
| 4. | PBX Interface (2-wire)/2 Wire PBX | Kit, CCA, PBX Line Intfc | 325928-001 | Unit, 120928-001<br>F/W U6, 312923-022 |
| 5. | PBX Interface (4-wire)/4 Wire PBX | Kit, CCA, 4-Wire PBX Line Intf | 325944-001 | Unit, 120944-001<br>F/W U6, 312923-023 |
| 6. | ASU Interface/ASU | Kit, CCA, ASU Line Intfc | 325930-001 | Unit, 120930-001<br>F/W U4, 312923-024 |
| 7. | Phone E&M Interface/E&M | Kit, CCA, E&M Line Intfc | 325931-001 | Unit, 120931-001<br>F/W U2, 312923-026 |
| 8. | SS-1/4 Interface/SS-1/SS-4 | Kit, CCA, SS-1/SS-4 Line Intfc | 325929-001 | Unit, 120929-001<br>F/W U2, 312923-025 |
| 9. | Maintenance Access Unit/ Maintenance Access | CCA, Maintenance Access | 120975-001 | N/A |

## *Table 1-3. Common Name Equipment List (including firmware) (Continued)*

| Item | Common Usage/ Front Panel Name | P/L Name | Part Number | Assembly/ Firmware Part Number |
|---|---|---|---|---|
| 10. | Radio Processor/Radio | Kit , CCA, Rad M/S Intfc | 325936-001 | Unit, 120936-001<br>F/W U13, 312923-007 |
| 11. | Remote Radio Processor/ Remote Radio | Kit, CCA, Remote, Interlocking<br><br>Kit, CCA, Remote, Interlock | 325937-001<br><br>325937-002 | Unit, 120937-001<br>F/W U13, 312923-011<br>Unit, 120937-002<br>F/W U13, 312923-027 |
| 12. | Parallel Control Processor/ Parallel Control | Kit, CCA, Parallel I/O w/Fmwr | 325663-001 | Unit, 120663-004<br>F/W U52, 312923-014<br>F/W U53, 312923-015 |
| 13. | Operator Processor/Operator | Kit, CCA, Opr Prcsr w/Diff 25 Mhz<br><br>Kit, CCA, Opr Prcsr, Split, w/Diff 25 Mhz | 325996-003<br><br>325996-004 | Unit, 120996-003<br>F/W U40, 312923-043<br>F/W U5, 313015-046<br>Unit, 120996-004<br>F/W U40, 312923-040<br>F/W U5, 313015-046 |
| 14. | Operator Processor (Supervisor Record)/ Operator | Kit, CCA, Opr, Spt w/Diff 25 Mhz ,Sup Rec | 325938-006 | Unit, 120938-003<br>F/W U40, 312923-041<br>F/W U5, 313015-046 |
| 15. | Gateway Interface/Gateway Interface | Kit, CCA, Gateway Intfc w/Fmwr | 325671-005 | Unit, 120671-005<br>F/W U31, 312923-017<br>F/W U32, 312923-018 |
| 16. | Alarm Unit/Alarm | Kit, CCA, Alarm Processor | 325674-005 | Unit, 120674-006<br>F/W U31, 312923-013<br>F/W U32, 312923-012 |
| 17. | High-speed Data Link | Kit, CCA, HSDL | 325964-001 | Unit, 120964-001<br>F/W U34, 312394-320 |
| 18. | Ring Generator Unit/Ring Generator | CCA, Ring Generator Card | 120932-001 | N/A |
| 19. | Position Fuse Panel/--- | Fuse Pnl Assy, Integ, Black * | 110942-001 | N/A |
| 20. | Gateway Computer/--- | PC Assy, Gateway | 110934-001 | N/A |
| 21. | Power Supply Module (Version 1) | PS, MDL, AC/DC Conv 28V @ 125A | 400052-003 | N/A |
| 22. | Power Supply Module (Version 2) | PS, MDL, AC/DC Conv w/OVV Prot | 400052-003 (same as item 21) | N/A |
| 23. | System Alarm Panel/--- | System Alarm Assy | 110933-003 | Unit, 120994-001<br>F/W U8, 162004-001<br>F/W U9, 162004-002 |

## *Table 1-3. Common Name Equipment List (including firmware) (Continued)*

| Item | Common Usage/ Front Panel Name | P/L Name | Part Number | Assembly/ Firmware Part Number |
|---|---|---|---|---|
| 24. | Low Voltage Disconnect (Battery Connect) | Assy, LVD, SAP Intfc, 200A *<br>Assy, Dlyd Strt Load LVD, 200A * | 110081-003<br>110081-008 | N/A |
| 25. | Maintenance Speaker Panel/--- | Spkr Pnl Assy, 28 VDC w/Vol, Black * | 110703-002 | N/A |
| 26. | Telephone Line Surge Protector/--- | CCA, Transient Surge Protector (NOTE: -001 = 50 lines or 25 pair; -002 = 32 lines or 16 pair) | 120611-001<br>120611-002 | N/A |
| 27. | Radio Distribution Panel/--- | CCA, Radio Distr w/Champs * | 120939-001 | |
| 28. | Operator Distribution Panel/--- | CCA, Operator Distr * | 120715-001 | |
| 29. | Operator Power Distribution Panel | CCA, Power Distr Panel * | 120941-001 | |

* Non-recommended LORA item (Non-LRU item)

| | | | | |
|---|---|---|---|---|
| ***Position Equipment Common*** | | | | |
| 30. | Speaker Module/---<br>Speaker Module/--- | Spkr Mdl Assy, Digital, Tower<br>Spkr Mdl Assy, DGTL, EMI shld | 110580-003<br>110580-004 | N/A |
| 31. | Jackbox<br>Jackbox | Jackbox Assembly<br>Jackbox Assembly, EMI | 110948-001<br>110948-002 | N/A |
| ***Position Equipment TED (Type 2)*** | | | | |
| 32. | Pot Module/--- | Pots Module Assy, Non-split<br>Pots Module Assy, Split<br>Pots Module Assy, Non-split, EMI<br>Pots Module Assy, Split, EMI | 110945-001<br>110945-002<br>110945-003<br>110945-004 | N/A |
| 33. (Note) | Position Card File/--- | 5 Slot CD File Assy, LCD, TED<br>5 Slot CD File Assy, LCD, Split, TED | 110949-001<br>110949-002 | N/A |
| 34. | Touch Entry Device (TED)/--- | TED, LCD, TRACON<br>TED, LCD, Tower<br>TED, LCD, Tower, EMI | 259252-001<br>259253-001<br>259331-001 | N/A |

## *Table 1-3. Common Name Equipment List (including firmware) (Continued)*

| Item | Common Usage/ Front Panel Name | P/L Name | Part Number | Assembly/ Firmware Part Number |
|---|---|---|---|---|
| ***Position Equipment Mini Basic*** | | | | |
| 35. | Mini-Basic Operator Panel (MBOP)/--- | Assy, Bsc Opr Posn, 30 Btn, Bg | 110951-001 | N/A |
| 36. (Note) | Position Card File/--- | 5 Slot Card File Assy, MBOP<br>5 Slot CD File Assy, SPT MBOP | 110949-003<br>110949-004 | N/A |
| ***Position Equipment IBOP (Type 1)*** | | | | |
| 37. | IA Module/--- | IA Module Assembly<br>IA Module Assembly, EMI<br>IA Module Assembly<br>IA Module Assembly, Split | 110541-001<br>110541-003<br>110541-002<br>110541-004 | N/A |
| 38. | Integrated Basic Operator Panel (IBOP)/--- | Integrated BOP Assy, w/Pots<br>Integrated BOP Assy, w/Pots, Split | 110946-005<br>110946-006 | N/A |
| 39. | Radio Selector/--- | Sw, Rad Mdl w/LCD, 20 Btn, Bg<br>Sw, Rad Mdl w/LCD, 20 Btn, EMI, Bg | 110717-001<br>110955-001 | N/A |
| 40. | DA Selector (20 key)/--- | Sw, D/A Mdl, 20 Btn, Bg<br>Sw, D/A Mdl, 20 Btn, EMI, Bg | 110718-001<br>110958-001 | N/A |
| 41. | DA Selector (35 key)/--- | Sw, D/A Mdl, 35 Btn, Bg | 110967-001 | N/A |
| 42. | Programmable DA Selector/--- | Sw, Prgm D/A Mdl, 4 Btn w/LCD, Bg<br>Sw, Prgm D/A Mdl, 4 Btn w/LCD, EMI, Bg | 110719-001<br>110957-001 | N/A |
| 43. | Foot Switch Assembly | Foot SW Assy, Linemaster 23-A | 110023-023 | N/A |

NOTE 1: The ETVS system also has the following versions of the card file assembly:

| P/N | NAME |
|---|---|
| 110391-001 (New) | Card File Assy, EMI |
| 110391-002 (New) | Card File Assy, Split, EMI |

***Table 1-3. Common Name Equipment List (including firmware) (Continued)***

| Item | Common Usage/ Front Panel Name | P/L Name | Part Number | Assembly/ Firmware Part Number |
|---|---|---|---|---|
| ***Position Equipment*** | | | | |
| 44. | Supervisor Config. Terminal (SCT) & Maint. Config. Terminal (MCT) | Kit, Local SCT/MCT w/o Printer<br>Kit, Local SCT/MCT w/Printer<br>Kit, Remote SCT/MCT<br>Kit, Remote SCT/MCT w/RMT PWR | 320931-001<br>320931-002<br>320932-001<br>320932-002 | N/A |
| 45. | Remote Server | Computer, SCT/MCT Rmt Server | Part of Kit 320932-001 | N/A |
| 46. | SCT/MCT Printer | Printer, Dot Matrix, Mlt SP | 259018-001 | N/A |
| 47. | Supervisor Recorder/--- | Tape Recorder, Rmt, VO Actvtd | 259134-001 | N/A |
| 48. | Supervisor Record Interface | Rcdr Assy, ISDN Supervisory | 110735-001 | N/A |
| 49. | Remote Alarm Panel | Remote Alarm Assembly | 110838-002 | N/A |
| 50. | Uninterruptable Power Supply | UPS, Floor Mount, 1400 VA | 259245-001 | N/A |
| 51. | Remote Position Interface Unit | RPIU Assy, Split, Local | 110956-001 | N/A |
| 52. | Remote Position Interface Unit | RPIU Assy, Split, Remote | 110956-002 | N/A |
| 53. | Remote Position Interface Unit | RPIU Assy, Non-split, Local | 110956-003 | N/A |
| 54. | Remote Position Interface Unit | RPIU Assy, Non-split, Remote | 110956-004 | N/A |

The system documentation is not complete without this manual and the other support documentation listed in **Table 1-4**.

***Table 1-4. List of Support Documentation***

Technical Instruction Book—Volume 1, CDRL F13
Enhanced Terminal Voice Switch (ETVS) NSN 0056-00-480-0436
TI #6650.53 (P/N 092923-101)

- Operator's Manual, CDRL F06
  Enhanced Terminal Voice Switch (ETVS) NSN 0056-00-480-0440

- Supervisor Configuration Terminal (SCT) User's Manual, CDRL F06
  Enhanced Terminal Voice Switch (ETVS) NSN 0056-00-480-0439
  6650.54 (P/N 092923-020)

- Site Installation Integration and Acceptance Test Document (SIIATD)
  Enhanced Terminal Voice Switch (ETVS)

- Vendor documentation for the SCT, MCT, and Remote Server Computers
  Motherboard User's Manual, 486F55 (The Computer Place)
  Optiquest 1000S User's Manual (ViewSonics)

- Vendor documentation for the SCT/MCT Printer
  Operating Instructions for Impact Dot Matrix Printer KX-P1150, Panasonic, PJQX6614ZA S0693C1073M (Printed in Malaysia)

- Vendor documentation for the portable Uniterruptable Power Supplies
  APC Smart-UPS Manual
  APC Power Shute Plus Manual (Windows Version)
  APC Power Shute Plus Manual (Windows NT Version)
  (American Power Converters)

- Vendor documentation for the supervisor position recorders
  Radio Shack Model 141151 Owner's Manual, CTR-66
  (Radio Shack)

*This page is intentionally blank.*

# SECTION 2.

# INSTALLATION

## 2.1 INTRODUCTION

### 2.1.1 General Background Information

This section contains general, generic information on the installation and checkout of the ETVS system. The system consists of equipment racks, position equipment, computer equipment (minicomputers, terminals, printers), and the required interface cables.

The ETVS central rack equipment will be installed in an equipment room located within the tracon/tower; position equipment will be installed in existing operator consoles in the tracon/tower cab. The ETVS manufacturer will provide and install all interconnecting cables between the equipment room and the equipment located in the tracon/tower cab. The Government will be responsible for supplying the cabling for the remote positions from the Facility Demarc to the Remote Site Demarc.

Detailed cabling, equipment, installation, and test information for a particular ETVS system configuration (BS 1 through BS 4) is site specific; this information is provided in the Site Installation and Acceptance Test Document SIIATD E02a, the SIIATD for the specific site.

### 2.1.2 Equipment Description

Detailed descriptions of hardware elements that make up the four basic ETVS configurations are provided in Sections 4 and 5 of this ETVS Technical Instruction Book. The site installation, integration, and acceptance test document E02 SIIATD provides generic drawings and parts lists for the maximum (wired for) configuration of the four BSs available on the ETVS contract. This includes wiring diagrams for these configurations.

#### 2.1.2.1 Basic System Configuration

There are four basic ETVS system configurations available: BS 1 through BS 4. All hardware to support the ETVS requirements, specified in Section 3.0 of FAA-E-2894, is provided for each configuration.

BS 1: 9 positions; 12 Ground-to-Ground (G/G) and 12 Air-to-Ground (A/G) interfaces

BS 2: 16 positions; 20 G/G and 20 A/G interfaces

BS 3: 40 positions; 50 G/G and 50 A/G interfaces

BS 4: 80 positions; 100 G/G and 100 A/G interfaces

Each configuration has PC work station equipment provided with all necessary hardware, including a 486 computer, a monitor, and a printer. These basic configurations are described in greater detail in the SIIATD E02a site survey document.

#### 2.1.2.2 Common Equipment Configurations

The same generic operator position equipment configuration applies to each ETVS basic system configuration (BS1 through BS4). This equipment includes: Membrane Hardkey position equipment; Touch-Entry Display (TED) equipment; speakers; jacks; SCTs (local and remote); remote servers, etc. The location and quantities of each of these groups varies with the particular site and the size of the basic ETVS system configuration being used there. The quantity and arrangement of these elements is identified during the site survey and specified at the time of the order.

## 2.2 PRE-INSTALLATION PREPARATION

### 2.2.1 Pre-Installation Requirements Survey

The pre-installation requirements are determined during a facility/site survey. The survey verifies the composition/configuration of the system, the space requirements, the cable trenches/raceways, and all other site-unique installation requirements.

Prior to installation of the system:

a) The installation area should be clean and free of debris or any equipment not required for air safety and any obstacles that could seriously impede the installation of the equipment. Space should be provided in the installation area for unpacking the equipment.

b) The passageways should be clear in order to permit delivery of the equipment to the installation areas.

c) Cable trenches, raceways, and ladders should be accessible and have sufficient capacity to accept the required cables.

d) Spaces for empty crates, packing material, and other refuse should be identified.

e) The floor space requirements should be rechecked. Space should be allowed to permit maintenance. A minimum clearance of 3 feet rear and 4 feet front is recommended for the equipment racks. Requirements (bolt size, number, pattern/spacing, etc.) for securing equipment (both central and remote) racks and cutting access holes for floor tiles.

f) The dimensions for the cutouts in the consoles for the position equipment should be checked and validated; see panel cutout dimensions given in the site-specific documentation for the following equipment:

- BOP
- MBOP
- Speaker
- 20-Key DA Module
- 35-Key DA Module
- Radio Frequency Selector Module
- EL/LCD TED
- POTS Module/IA Display
- Electronic Programmable DA Module
- Jackbox

g) If the incoming lines are not protected, lightning arrestors should be installed. The manufacturer/installer has provided ETVS with secondary lightning protection; transient surge protectors have been installed in the central equipment rack of the ETVS to ground any transients on the phone lines to earth ground. In order for the manufacturer of ETVS to successfully complete the installation and Site Acceptance Test of the ETVS at each site, certain items must be completed by the Government prior to beginning the installation. This includes lightning protection for all incoming circuits. The site requirements for primary lightning protection (including such devices such as lightning arrestors) are delineated by the Government at the time of the site survey.

### 2.2.2 Computer Software Installation

#### 2.2.2.1 Typical Computer Software Inventory

**Table 2-1** briefly summarizes a typical ETVS computer software components (CSC) inventory. This software is installed and tested at the manufacturer's facility prior to delivery of the equipment to the installation site. At the site, the software is further checked as part of the installation checkout (e.g., string tests, etc.), integration tests, and acceptance tests. The site-specific survey document, E02a, provides software installation and checkout data needed for the site.

#### 2.2.2.2 Software Factory Installation/Checkout (General Background)

The following sub-paragraphs provide general background information only. No detailed installation instructions are provided here. System software is pre-loaded (installed) prior to delivery of the equipment. At the site, pre-installation checks of the software will be made as necessary to ensure all software has been installed. Software used includes MS Windows for Work Groups (Version 3.11) on the SCT/MCT PCs and gateway computers. Windows 95 is used for PCs associated with remote equipment located over 500 feet (via cable) from the central rack equipment, and Windows NT is used with the remote servers. (The manufacturer will be responsible for the proper installation of the LAN hardware).

After installation of the SCT/MCTs, gateway computers, and remote servers, and initial power-up is accomplished, the gateway icons on the SCT are checked. If the icons turn to blue connection icons, this means that the gateway computer and SCT connections are successful. If the icons do not turn to blue connection icons, the cables should be checked for proper installation/connections.

The ETVS site survey document provides the requisite procedures for on-site software/hardware checkout.

***Table 2-1. Typical Computer Software Components (CSC) Inventory***

| ASSOCIATED CSC HARDWARE | CSC FUNCTION |
|---|---|
| GATEWAY PC (VIA GATEWAY INTERFACE) | Two redundant Gateway computers each provide interface between one redundant control data bus and one redundant LAN in the Configuration and Control System. Includes Windows 3.11 for Workgroups, DENRO software, and Gateway utilities. Sends maps for system boot-up; maintains system configuration maps. |
| POSITION EQUIPMENT HARDKEY, TED | Controls light, key, and audio functions at the operator console (pushbutton and TED). |
| OPERATOR PROCESSOR | Performs communications between the operator and other participants in the network (operator, radio, and telephone); provides audio switching for operators. |
| TELEPHONE PROCESSOR (CONFERENCER)<br>• E&M<br>• 2-WIRE PBX<br>• 4-WIRE PBX<br>• ASU<br>• SS-1/4 | Functions include multiplexing of incoming and outgoing calls. Controls the telephone interfaces and communicates with other control bus participants. |
| RADIO PROCESSOR | Interfaces audio signal lines of two radio transmitters and two receivers with digital signal processors. Controls the radio device card and communicates with other central bus participants. |
| SCT/MCT (P/O CONFIGURATION CONTROL SUBSYSTEM) | Provide operator access to configuration software. Monitor ETVS and allow for reassignment and reconfiguration. Also provide system status. Operating system software is System Configuration Utility (SCU). |
| HIGH-SPEED DATA LINK (HSDL) | Transfers data between parallel buses and reduces the bus electrical loading. Used as a repeater for the redundant Carrier Multiple Access with Collision Detection. |
| ALARM PROCESSOR | Polls system units for current status (including state of the fuse alarm lines from each of the rack card cages); collects error messages; reports error conditions to the interactive terminals. |
| TIMER-MULTIPLEXER UNIT/CLUSTER-MULTIPLEXER UNIT (TMU/CMU) | TMU provides master system clock and source for clock signals. Both the TMU and CMU receive cluster assignments and control cluster information. CMU performs muxing functions only. |
| PARALLEL CONTROL PROCESSOR | Interfaces Central Rack control bus with dedicated control lines to and from peripheral equipment. Also provides control (release) and status for up to five (5) door-release circuits. |
| REMOTE TERMINAL (P/O CONFIGURATION CONTROL SUBSYSTEM) | Interfaces via modem with remote server to act as a remote SCT/MCT (Remote Configuration Terminal/Maintenance Configuration Terminal). (Supervisor Position). |

*Table 2-1. Typical Computer Software Components (CSC) Inventory (Continued)*

| ASSOCIATED CSC HARDWARE | CSC FUNCTION |
|---|---|
| REMOTE SERVER | Provides access for remote terminals and gateway computers through modem interface. |
| RADIO INTERLOCKING PROCESSOR | Controls remote radio interface for interlocking operation. |
| SUPERVISOR RECORD INTERFACE | Processes two position record channels on ISDN link from the Supervisory Record and outputs the record audio signals to recorders at the Supervisory position. Monitors and sums operator channel as directed by SCT. Sends information over ISDN lines to recorder. |
| RADIO INTERLOCKED PROCESSOR (REMOTE RADIO INTERFACE) | Controls Interlocked Radio Processor for remote operation (6-wire interlock). |
| 1400 VA UNINTERRUPTABLE POWER SOURCE (UPS) | Power Chute Program Plus software used with SMART-UPS warns of power problems (at SCT), then automatically shuts down the system with all vital data intact. Provides "graceful" unattended shutdown and management of servers. |

### 2.2.2.3 $I^2C$ Addresses (of Devices with Hex Switch)

The Inter-Integrated Circuit ($I^2C$) is a 2-wire closed-loop bus that interfaces the position equipment. Each position switch module is tied to this bus and has a unique address on the bus. **Table 2-2** provides a listing of these addresses. These must be established by the setting of S1 Hex Switches (per the table) prior to installation of the equipment (initial settings of address switches are done at the manufacturer's facility).

*Table 2-2. $I^2C$ Addresses (of Devices with Hex Switch)*

| MODULE | *S1 HEX SWITCH* |
|---|---|
| 20-key DA #1<br>35-key DA #1 (IBOP only) | F |
| 20-key DA #2<br>35-key DA #1 (IBOP only) | E |
| RADIO Module #1 | D |
| RADIO Module #2 | C |
| RADIO Module #3 | B |
| RADIO Module #4 | A |
| RADIO Module #5 | 9 |
| RADIO Module #6 | 8 |
| RADIO Module #7 | 7 |
| RADIO Module #8 | 6 |
| Programmable DA #1 | D |

***Table 2-2. $I^2C$ Addresses (of Devices with Hex Switch) (Continued)***

| MODULE | *S1 HEX SWITCH* |
|---|---|
| Programmable DA #2 | C |
| Programmable DA #3 | B |
| Programmable DA #4 | A |
| Programmable DA #5 | 9 |
| Programmable DA #6 | 8 |
| Programmable DA #7 | 7 |
| Programmable DA #8 | 6 |

*S1 accessible from rear of module.

NOTE

Module/DA numbers are basically driven by the size of the system configuration used (in this case, BS 3 is the system). These numbers are used as “key indicators” to separately identify each module/DA. See S1 Hex Switch Column.

## 2.3 INPUT REQUIREMENT SUMMARY

### 2.3.1 AC Input Power

The central rack equipment power supplies generate 27.5 VDC. These supplies require source power of 240 VAC (+15%), 50-60 Hz, single phase; a separate 30-amp circuit breaker is recommended for each power supply.

NOTE

Site-specific information concerning AC power circuit breakers, minimum amperage for the breakers, total number of breakers required, etc. can only be determined at the installation site; this depends upon the size ETVS installed at a particular site. The number of 30-amp and 20-amp (or 15-amp) motor-rated AC circuit breakers required varies with the size of the specific ETVS system installed; the quantity of racks, position equipment units, and SCT/MCTs used also depend on the size of the particular ETVS installed. Also, each circuit must use a different phase. The SIIATD (E02) indicates use of one 30-amp breaker per AC circuit for the central equipment rack, one 15-amp breaker per AC convenience outlet, and two 15-amp breakers per AC circuit for SCT/MCT power.

Remote Power Rack—125-amps at 27.5 VDC. Source power of 115 VAC (+15%), 50-60 Hz, single phase, is required. A 15-amp circuit breaker is recommended for each power supply.

Remote Power Supply—15-amp breaker; 115 VAC; 2 sizes: 1 to 4 positions require two power supplies; 5 to 16 positions, 3 power supplies.

Each configuration terminal (SCT/MCT) requires a duplex receptacle providing 115 VAC, 60 Hz, using a separate 20-amp circuit breaker. If the optional Uninterruptable Power Supplies (UPS) are used, the SCTs/MCTs plug into the UPS, with the UPS, in turn, plugging into duplex AC receptacles.

Power Supply DC Operating Voltage—See Power Requirements, **Table 1-1**, Section 1.

Battery Voltage—See Power Requirements, **Table 1-1**, Section 1.

### 2.3.2 Ambient Temperature Limits

Ambient temperature of any room housing the equipment should stay between 10- degrees C and 40-degrees C during operation. Humidity should be between 0 to 80% (non-condensing). Exceeding these limits may cause interruption of service.

## 2.4 UNPACKING (AT INSTALLATION SITE)

CAUTION

Use care in the off-loading and handling of the equipment to prevent damage to the equipment and injury to the off-loading personnel.

a) The equipment should be off-loaded near the entrance to the facility. Inspect each carton for shipping damage, and note any damage on the Bill of Lading. Remove the packing material from the equipment racks.

b) Shipping Contractor will move the racks to the equipment room to the location where they are to be installed. See the floor plans for details.

c) Shipping Contractor will move remaining equipment to the equipment storage room or space provided by the local facility.

d) Inventory the material and equipment against the packing lists. Take appropriate action to correct all deviations.

e) Collect and remove all excess packing materials from the premises.

CAUTION

Batteries weigh approximately 40 pounds each. Use of carrying straps is recommended if they are being carried individually to the installation area after being removed from their packing cartons; if moving several batteries (in their cartons) at the same time, use of a hand truck is recommended. Handle batteries with care when installing within the close confines of the equipment rack.

f) Batteries will be shipped separately from the equipment racks. These batteries are classified as non-hazardous material as related to DOT-CFR Title 49 parts 171-189, and are not restricted for surface transport. For safety purposes, the batteries are equipped with a flame arresting one-way relief vent. The batteries will be installed in the appropriate racks when the installation of the racks is complete and the system is ready to begin its testing phase.

NOTE

If the equipment is delivered to temporary storage, the government will be responsible for transporting the equipment to the site.

## 2.5 ON-SITE INSTALLATION

### 2.5.1 Central Equipment Racks

Refer to the typical floor plan layout shown in **Figure 2-1**. This layout is provided for information/reference purposes only; it is for a 3-rack configuration, and the number of racks per basic system varies. For example, for the BS 3, the maximum floor space allotted may be limited to a floor space of 8 feet by 12 feet; including aisle space and room for equipment access. See E02a for site-specific floor space requirements for the system being installed.

NOTE

See Section 6.2 of the ETVS Technical Instruction Book for ESD precautions to be observed when handling or working with printed circuit cards.

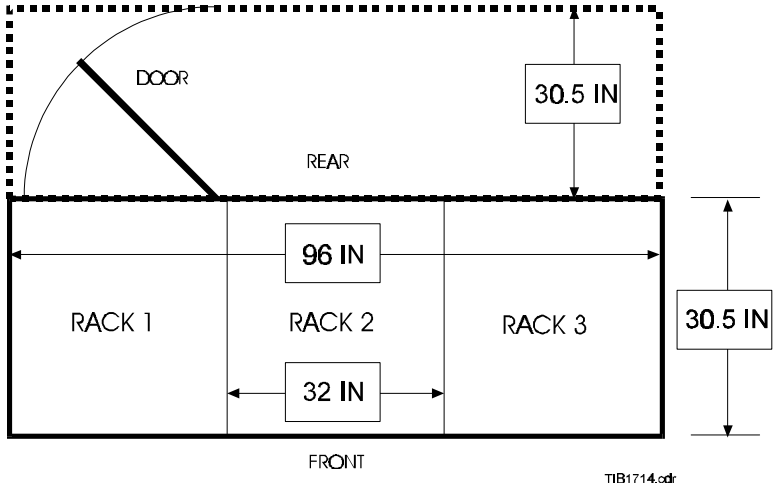


***Figure 2-1. Typical Floor Plan with Recommended Clearances***

1. As applicable, verify that all necessary access holes have been cut in the rack assemblies for the cables.

NOTE

Location of these holes may be dependent upon special installation requirements of the site; see the site specific survey document, E02a).

2. Position the racks in place.
3. Connect the racks together using four bolts per rack.
4. Ensure that the plug-in modules are in the correct position and are secure.

### 2.5.2 Position Equipment

The procedures depend on the type of position equipment supplied with the system. Panel cut-out dimensions for position equipment are contained in Section 6.1.1 of the E02-SIIATD.

a) **TED Position.** Hardware will have a position card file associated with each position, which will contain Position Audio and Processor Cards. Mount the

equipment in the consoles; appropriate size cutouts should already have been made.

b) **IBOP.** Mount the equipment in the consoles; appropriate size cutouts should already have been made.

c) **MBOP**. Hardware will have a position card file associated with each position, which will contain Position Audio and Processor Cards. Mount the equipment in the consoles; appropriate size cutouts should already have been made.

### 2.5.3 Intra-Position Cabling

Refer to the SIIATD-provided cabling diagrams. The connectors on the position equipment are clearly labeled/identified. The cabling requirements depend on the equipment supplied at the position; see the installation section and applicable attachment (ETVS interconnecting cable list) in the SIIATD. Site survey, done prior to system installation, provides the necessary site-specific information.

### 2.5.4 Position-to-Central Rack Cabling

NOTE

Site survey, done prior to system installation, provides the necessary site-specific information.

Consult the SIIATD wiring diagrams for cabling details.

a) Attachment B of the E02-SIIATD provides an interconnection cable list for the ETVS. This list will be modified/updated as necessary to reflect site-specific requirements. This includes:

- Intercom/Interphone
- Radio Main Receive Audio
- Radio RCV (Main Receive Audio)
- Radio RCV (Standby Receive Audio)
- Radio TX (Main Transmit Audio)
- Radio TX (Standby Transmit Audio)
- Radio Main PTT
- Radio Standby PTT
- M/S RCV Ant Switch

- M/S TX Ant Switch
- Radio Squelch (Squelch Break Main)
- Radio Squelch (Squelch Break Standby)
- Radio Recorders
- Operator Recorders
- Telephone Recorders

b) Route the cables to the position.

NOTE

The site survey will determine the cable routing and connectors for power distribution; i.e., from the control rack operator and power distribution panels to the individual operator position equipment and remote equipment (e.g., SCT/MCT, remote position power rack, etc.).

c) If open-ended, size the cables (leaving some slack), cut to desired length, and mount the connectors. Connect the cables to the equipment.

### 2.5.5 Intra-Rack Cabling

The intra-rack cables are labeled with an identifying label. See the intra-rack cabling diagram in the SIIATD (E02a) to determine where a particular cable mates. Site survey, done prior to system installation, provides the necessary site-specific information.

### 2.5.6 Demarcation Cabling

Demarcation cabling lists/wiring diagrams are provided in the SIIATD. The list provides the color coding of the wires, signal identification, and connector pin numbers. Site survey, done prior to system installation, provides the necessary site-specific information.

### 2.5.7 SCT/MCT Cabling

The SCT is connected to the LAN connector on the Gateway computers. When more than one terminal is used, they are daisy chained using an Ethernet type 'BNC' connector. Cables for the SCT/MCT and printer, including connection to the optional Uninterruptable Power Supply (UPS), 120 VAC power source, and RS-232 serial interface cable, are installed as indicated in the SIIATD documents for each specific site. Also, the site survey identifies precise cabling requirements for the remote server, RCTs (SCTs remotely located), and supervisor recorder/supervisor recorder interface.

The SCT/MCT CPUs have a voltage selector switch, mounted on their back panels, which must be checked prior to the units being plugged into AC power source, to ensure that the switch is set in the 115 VAC position for the units to operate on 120 VAC power.

### 2.5.8 Primary Power Cabling

The Government is responsible for connecting the #10 AWG and #12 AWG wiring to the equipment room AC distribution panel (which is connected to the ETVS Central Power Equipment Rack) and to the convenience outlets in the bottom front of each central rack. Each site survey document will identify the precise primary cabling requirements for a particular site. Government responsibilities vice installer responsibilities will be delineated.

## 2.6 INSPECTION

### 2.6.1 Equipment Placement

a) Verify that the central racks are located as per the site floor plan.

b) Check that all assemblies, cards, power supplies, etc., are installed in accordance with equipment drawings.

c) Verify that the system configuration units are located as per the site floor plan.

d) Verify that the position equipment is installed in the correct console. Refer to the site console layout drawings.

### 2.6.2 Cable Interconnections

Installation technicians will make up (fabricate) and mark only ISDN and position power cables in the field; these cables will be marked with the standard six-digit base number (without dash number since the cable is being cut to the exact length required). The data cables (unmarked) are provided in prefabricated sections to specific lengths; these are COTS cables and the installer will not re-mark. The ends of the ISDN and position power cables will not bear Px or Jx (e.g., P1/P2) reference designator at either end. A generic position cabling diagram will be provided for each generic type position; however, no cable running diagrams or customized diagrams will be furnished. Three basic types of cables are provided at the site:

- ISDN 613003
- Power 320965
- Data 613012, 613013

Cable assemblies fabricated at the installer's facility (DENRO) are marked in accordance with applicable standards and specifications. A standard blank cable marker, P/N 340006-001, is commonly used and located at both ends of particular cables, which may also have reference designators at each end (e.g., P1, P2).

Verification of cables/cable interconnections include the following:

a) Verify that all intra-rack cables are correctly labeled and installed on the equipment racks.

b) Verify that all position cables are correctly labeled and installed in the position consoles.

c) Verify that the cables from the central racks to the demarcation frame are installed correctly.

d) Verify that the cables between the central rack and the system configuration terminals are connected.

### 2.6.3 Equipment Access

Verify that the central rack doors open without interference and that there is sufficient clearance for maintenance of the equipment.

### 2.6.4 Environmental Requirements

Verify that the environmental requirements (ambient temperature) listed in paragraph 2.3.2 have been met.

## 2.7 INSTALLATION CHECKLIST

An installation checklist (see format used in the SIIATD) is used to verify that all items have been installed properly. These items include:

- ETVS Central Equipment Rack in correct location (see Equipment Room Layout provided by the customer)
- Central Equipment Rack Door (no interference/sufficient clearance)
- SCT located in proper areas
- All SCT cables connected and secured
- MCT located in proper areas
- All MCT cables connected and secured
- Position Equipment cables all properly routed, connected, and secured (see cable routing drawing)
- All Position Equipment properly installed
- All power and grounding connections installed correctly
- All Central Rack boards are seated properly
- All Demarcation Cables are routed, connected, and secured as identified by Government-approved Installation Demarcation Wire List.
- Optional UPS units, as used in the system, are properly connected to SCT/MCTs and connected to AC power receptacles.

## 2.8 CONTINUITY CHECKS

These checks are used to isolate cable problems detected during the system audio tests; such tests are only needed when a cable is suspected of being defective. Connector test adapters are used to test specified cable types. The manufacturer’s installation technicians will carry a connector adapter.

### 2.8.1 Demarc Cable Continuity Checks

| Step | Procedure |
|---|---|
| 1. | Using connector test adapter for a 90-degree, 50-pin, demarc cable, connect this adapter to the GFE IDF side of the demarc cable. |
| 2. | Using a VOM (Fluke Model 75 or 77, or equivalent) ohm-out the adjoining pair (i.e., 1 and 26, 2 and 27 etc.) and verify continuity through each pair. |
| 3. | Correct any defects. |
| 4. | Re-connect cable and repeat as required. |

### 2.8.2 Position Data Cable Continuity Checks

| Step | Procedure |
|---|---|
| 1. | Using connector test adapter for a position data cable connector (14-pin, 180-degree connector), connect the test adapter to the position side of the cable. |
| 2. | Using a VOM (Fluke Model 75 or 77, or equivalent) ohm-out the adjoining pair (1 and 8, 2 and 9, 3 and 10, etc.) and verify continuity through each pair. |
| 3. | Correct any defects. |
| 4. | Re-connect cable to position console. Repeat as required. |

## 2.9 SYSTEM POWER-UP (START-UP) AND POWER TESTS

Perform the following procedure to power up the system at the installation site for the first time.

CAUTION

Be sure to follow the procedural steps in the order given. Performing steps out of sequence could cause incorrect initial power supply loading, which could result in a system failure.

NOTE

All batteries to be used for backup/reserve power should be checked for full charge prior to their installation in system. (A standard VOM, Fluke 75 or 77, or a commercial battery checker may be used). Section 6 provides scheduled maintenance procedures and procedures for removal/replacement of the batteries (central rack and remote rack-mounted) after system goes into regular service. Also, if used in the system, the optional Uninterruptable Power Supplies (UPS) should be checked by a factory representative before initial power-up of the system).

a) Verify that all power supply module power switches are set to OFF position.

b) Verify that all position equipment power switches are in the OFF position.

c) Verify that the SCTs and MCTs have been switched OFF.

d) Switch ON the power to the central rack equipment, SCTs/MCTs, and remote equipment (AC breakers).

e) Turn ON the SCT(s) and MCT(s). Verify there are no errors (error messages) present. If errors are indicated, determine the cause and correct as appropriate.

f) Turn ON all UPS units (if used).

g) Check low-voltage disconnect (LVD) and delayed load connect panels to verify that the Manual Override switch on each panel is in the NORMAL position.

h) Turn ON the power switches for all power supplies (central equipment and remote power rack-mounted).

NOTE

The Version 1 power supply module power-on switch is the AC ON front panel switch. On Version 2, the power-on switch (AC breaker) is labeled “PUSH ON POWER.” Verify that the DC output voltage of each unit is correct. Observe that the “AC ON” LED is lit green and the FAULT LED is out.

i) Turn ON the gateway computers (central rack-mounted) (Front Panel POWER Switch).

j) Verify that the main power, reserve power, system fault and overheat status LEDs at the maintenance rack, Remote Power Supply Rack, and Remote Alarm panels are green.

k) Verify all position equipment perform their power ON Reset routine (LEDs cycle and position chimes tones are heard).

## 2.10 TURN-ON AND CHECKOUT

### 2.10.1 Introduction

The ETVS is turned on following installation and remains on.

The initial tests involve both the TED Positions (Local/Remote) and the Membrane Hardkey Positions (Local/Remote). Included are automated loopback tests, “AUTO LAMP” test, and touch tests.

Whenever the system is returned to operation following a power loss, or when desired, perform a position confidence test. If the test indicates that the position is not functioning normally, notify the Supervisor.

NOTE

A PASS/FAIL Indicator is provided on the IA display when the test is automatic; the IA display should report PASS (if the test is successful). The PASS/FAIL indicator does not flutter or wink. No such PASS/FAIL indicator is provided for the touch tests.

NOTE

If either of the 3-second or 10-second time limits are exceeded for selecting another test or test mode, the position automatically exits from these diagnostics.

NOTE

Pressing the * key will also cause the position to exit from the diagnostics.

### 2.10.2 Position Confidence Test

NOTE

The following procedures cause the position to go off-line. Do not proceed while position is operational or without the Supervisor's permission.

#### 2.10.2.1 Set-up Procedure

NOTE

When powering up for the first time after system installation, install fuse.

1. Turn ON the power switch for any position (install the fuse).
2. You will hear two (2) chimes once the position has initialized. If the positions have radios, a radio frequency will be displayed.

NOTE

Upon completion of each test, the indicator will show either PASS or FAIL. Following are basic checks to be made in the event of a FAIL:

- Position Loopback - Check audio path within position

- Subsystem Loopback - Check cable, Distribution Panel, and Operator Processor
- System Loopback - Check cables, Distribution Panel, Operator Processor, Timer Multiplexer Unit, Voice Data bus, and Operator Processor
- Secondary System Loopback - Repeats System Loopback for Split Channel

### 2.10.2.2 TED Position, Local/Remote (Touch Screen Position)

Perform diagnostics to confirm proper hardware and ISDN link performance.

1. Press **KEYPAD** key and enter **#0000** into the keypad to initiate diagnostics.

   [NOTE: **#0000** is a system command; it is not necessary to press the **IA** key to initiate diagnostics.]

2. The position will run four Loopback tests. The IA display should report the following indications, respectively:

   POS LPBK-PASS

   SUBSYS LPBK-PASS

   SYS LPBK-PASS

   SECONDARY SUBSYS LPBK-PASS (Split Positions only)

   IA Display

| | |
|---|---|
| DIAG MODE | |
| TOUCH TEST | 08 |

3. After the Loopback tests, three (3) seconds are allowed to select another test. Proceed as follows:

   a. Enter 2 into the keypad to initiate “TOUCH TEST.” Lightly press your finger on the screen edge and drag about complete periphery of screen. The screen should turn red where touched.

   NOTE

   Be careful not to touch the keypad and/or the IA Display. If there are no breaks in the red square drawn, then the touch screen controller and all associated IR drivers are functioning normally.

   b. Ten (10) seconds are allowed for selecting another test mode. Proceed to step c.

c. Enter into the following modes to test the eight (8) potentiometers on the "SPLIT POT" module. The bar in the IA display will move with knob turning [bar decreases in length for counterclockwise (CCW) knob turns and increases in length for clockwise (CW) turns].

NOTE

PR = Primary; SE = Secondary (functional at split positions only)

Enter **31** to test primary instructor sidetone "PR INST SID" (PR Instructor Side) pot

Enter **32** to test primary trainee sidetone "PR TRNE SID" (PR Trainee Side) pot

Enter **33** to test secondary instructor sidetone "SE INST SID" (SE Instructor Side) pot

Enter **34** to test secondary trainee sidetone "SE TRNE SID" (SE Trainee Side) pot

Enter **41** to test primary instructor headset "PR INST HS" (PR Instructor Headset) pot

Enter **42** to test primary trainee headset "PR TRNE HS" (PR Trainee Headset) pot

Enter **43** to test secondary instructor headset "SE INST HS" (SE Instructor Headset) pot

Enter **44** to test secondary trainee headset "SE TRNE HS" (SE Trainee Headset) pot

Enter **51** to test the A/G speaker. Produce a steady tone through the speaker and allow the volume to be adjusted by the speaker knob.

Enter **52** to test the G/G speaker (functional at split positions only). Produce a steady tone through the speaker and allow the volume to be adjusted by the speaker knob.

Enter ***** to exit diagnostics.

NOTE

Characters that are bold are keyed commands and those not bold only are displayed entities on the IA Display.

For remote positions, power up Remote Rack Power Supply and repeat this procedure.

### 2.10.2.3 Membrane Hardkey Position, Local/Remote

1. Perform diagnostics to confirm proper hardware and ISDN link performance. Enter **#0000** into the keypad to initiate diagnostics.
2. The position will run four Loopback tests. The IA display should report the following indications, respectively:

   POS LPBK-PASS

   SUBSYS LPBK-PASS

   SYS LPBK-PASS

   SECONDARY SUBSYS LPBK-PASS (Split Positions only)
3. Enter **1** to initiate “AUTO LAMP” (diagnostics mode 1, all modules should cycle all LED indicators green, then all amber, then all off).
4. Enter **2** to initiate “LAMP TOUCH” (diagnostics mode 2, see Figure below).
5. Press each button three (3) times on the DA module, the Radio module, and all of the DA keys on the BOP (be careful not to touch any buttons on the keypad). The LED for that button should initially be off, then turn green with the first press, amber on the second press, and then turn off on the third press.

IA Display

| | |
|---|---|
| DIAG MODE | |
| TOUCH TEST | 08 |

6. Enter into the following modes to test the eight (8) potentiometers on the “SPLIT POT” module. The bar in the IA display will move with knob turning (bar decreases in length for CCW knob turns and increases in length for CW turns).

   (SE tests functional at split positions only.)

   Enter **31** to test primary instructor sidetone “PR INST SID” pot

   Enter **32** to test primary trainee sidetone “PR TRNE SID” pot

   Enter **33** to test secondary instructor sidetone “SE INST SID” pot

   Enter **34** to test secondary trainee sidetone “SE TRNE SID” pot

   Enter **41** to test primary instructor headset “PR INST HS” pot

   Enter **42** to test primary trainee headset “PR TRNE HS” pot

Enter **43** to test secondary instructor headset “SE INST HS” pot

Enter **44** to test secondary trainee headset “SE TRNE HS” pot

7. Enter **51** to test the speaker (a steady tone should sound until the next step is initiated).
8. Enter **52** to test the G/G speaker (functional at split positions only). Produce a steady tone through the speaker and allow the volume to be adjusted by the speaker knob.
9. Enter ***** to exit diagnostics.

NOTE

Characters that are bold are keyed commands and those not bold only are displayed entities on the IA Display.

For remote positions, power up Remote Rack Power Supply and repeat this procedure.”

## 2.11 SCT/MCT POWER-UP AND INITIAL TESTING

Proceed as follows:

1. Power up SCT.
2. Login and enter password.
3. On the top of screen, the screen will indicate system alarms. Move the mouse to Status and click.
4. Verify that no alarms are present.
5. Repeat steps for MCT.

## 2.12 SYSTEM CHECKOUT PROCEDURES

Using the system checkout procedures provided in the SIIATD (E02a), perform the prescribed installation acceptance tests. These are verification tests used to demonstrate that the system meets the required functional and performance requirements. Further, these are the same tests that will be performed for the Site (User) Acceptance Test (SAT); these procedures will be performed in their entirety to ensure that the ETVS system will be fully tested and operational prior to starting the SAT.

The SAT contains the details necessary to install and functionally test the installed ETVS. The SAT procedures will be included as an attachment to the E02a SIIATD for each site. All performance parameters will be within the standards and tolerances set forth in these Test Procedures. The manufacturer's installation team will conduct verification of the system.

## 2.13 SITE INTEGRATION—INTERFACING

As may be directed by the Government, functional Integration Testing will be performed on actual circuits to ensure that all on-site communications circuits (including ETVS) are fully functional. In short, all facility circuits must be functional.

*This page intentionally blank.*

# SECTION 3.

# OPERATION

## 3.1 SCOPE

This manual provides the Enhanced Terminal Voice Switch (ETVS) user with a guide to the console position equipment and its operation as follows:

Paragraph 3.1 contains a general description of the position equipment and its capabilities.

Paragraph 3.2 contains a description of the position equipment controls available to the operator and the indicators presented during operation.

Paragraph 3.3 contains position turn-on and checkout information.

Paragraph 3.4 contains operational procedures for radio, telephone, and intercom communications control.

Paragraph 3.5 contains a brief description of the central rack-mounted maintenance position. The position consists of a normal hardkey position plus a maintenance speaker panel.

Paragraph 3.6 contains Supervisor Recorder/Supervisor Recorder Interface background information and operational procedures. For other details concerning operation of the recorder, consult the vendor commercial documentation listed in **Table 1-4**.

The procedures given in this manual are specific to the operation of the ETVS positions. This manual does not provide operating instructions for customer-furnished equipment (CFE) supplied with the system. Request CFE operation information from the site Supervisor. Obtain site operational procedures and duty assignments from the facility supervisor.

This manual is a guide to ETVS operation. To operate the ETVS, the operator must be familiar with radio, telephone and intercom communications practices and have received formal training in ETVS system operation.

Supervisory and maintenance personnel shall be familiar with the operating procedures for the Supervisor Configuration Terminal (SCT) and Maintenance Configuration Terminal (MCT). The SCT and MCT are devices that interface with the system to monitor its status and to provide a means of performing system reassignment (changing of key/switch functions), reconfiguration (changing of system units), maintenance status, and diagnostic reporting. Refer to the SCT Users Manual for detailed information on using the SCT and MCT.

### 3.1.1 ETVS System Description

The ETVS consists of a central switch (equipment racks containing the communications switching equipment) that is software configured via SCTs and MCTs interfaced with the central switch via a gateway computer. Operator position equipment, linked to the central switch by ISDN lines, provide the operator interface for channel selection and switching using Touch Entry Devices (TEDs) and hardkey controls. The system also supports remotely located configuration terminals and operator positions.

The SCT and MCT are identical terminals running the same software. They both perform the same system functions, however, the user must log on at the correct level for the function to be performed.

Supervisors/system administration personnel log on to perform system configuration activities and maintenance personnel log on to perform maintenance activities. Personnel may use either terminal by logging on and using their assigned password level for access to their assigned screens. Consult the SCT user manual for logon procedures and the functions available at each level.

In addition to the SCT, the Supervisor position has a complete set of operator equipment that functions identically to a standard operator position.

The central rack and operator positions are software configurable. System configuration is the responsibility of the Supervisor who has configuration control of the ETVS via the SCT. At initial system power-up, the ETVS boots up on its default map. The SCT can alter the default map. This map, and all subsequent maps, must reflect current hardware installation. Electrically Erasable Programmable Read Only Memory (EEPROM) components, installed on the system circuit cards, store their relevant portions of the map. The most recently downloaded map becomes the system default map.

As required, the Supervisor can, at the SCT, reconfigure radio frequencies, landline connections, and operator functions available at each position. This information is downloaded to the central switch and the positions as new maps during reconfiguration.

An indicator at the position informs the operator that a new map is pending, allowing the operator to accept the new map or choose to implement it later.

Installing additional cards, or changing the location of cards in the central rack, requires a new map that reflects the hardware changes.

Two jacks at each jackbox accommodate a Trainee and an Instructor headset or handset. Either user can monitor the activities of the other user at the jackbox. During radio communications, only one mic can be active during a transmission. Either user may activate PTT but the Instructor's PTT has priority and will preempt the Trainee's PTT. Although preempted, the Trainee will hear the Instructor's communication. During telephone and intercom communications, both mics can be active and both users may participate in the call.

### 3.1.2 Position Equipment General Description

Two types of position equipment provide operator interface with the ETVS central rack. Positions located at the TRACON have TEDs, at which the operator makes selections using touch-sensitive soft-keys identified by the name programmed for each key. Positions located in the control tower have either TEDs or membrane hardkey panels; both types perform the same operational functions. Membrane Hardkey positions are of two types: an (Integrated Basic Operator Position (IBOP) designed for consoles with ample panel space, and a Mini-Basic Operator Position (MBOP) designed for consoles where panel space is limited.

Both TED and Membrane Hardkey positions enable the operator to initiate and respond to all radio, telephone, and intercom communications configured for the specific position. Channel access and operational functions are configured at the SCT for each type of position.

#### 3.1.2.1 Touch Entry Positions

**Figure 3-1** illustrates an example of a TED position. The TED is an interface device with a resistive touch-sensitive membrane mounted on a liquid crystal display (LCD) panel. It is programmed in software to display screens, referred to in this manual as pages, that support different user functions. The user selects pages by touch and each page displays a matrix of selector keys pre-programmed for specific functions. One set of pages is used for radio communications control and another for telephone and intercom communications control. The touch keys display icons and color indicator bars to provide a key status indication. In addition, the color bars flash at different cadences to indicate the operational status of the communications circuit.

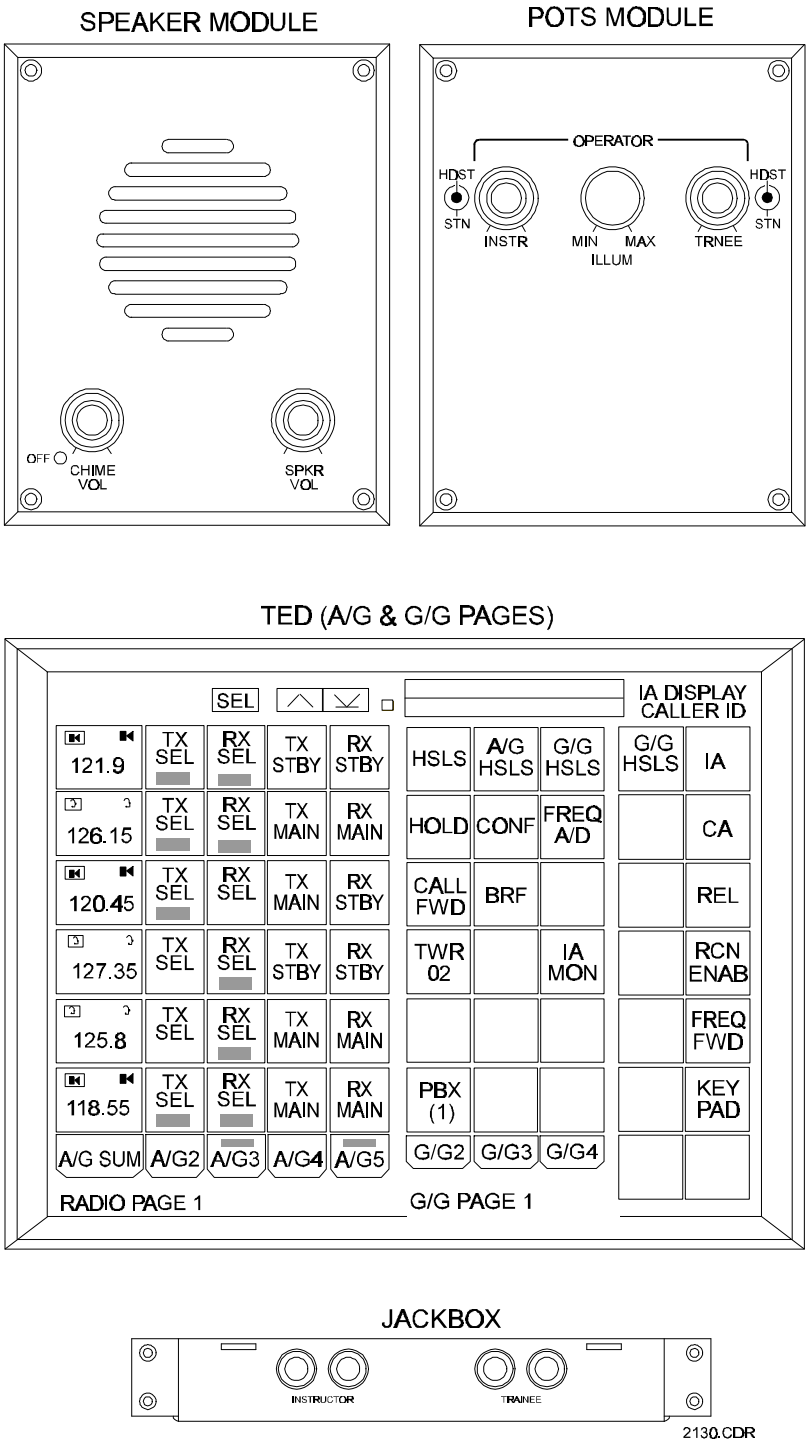


NOTE: Pots Module is the manufacturer's name for this unit

***Figure 3-1. Example of TED Position Equipment***

An IA Display, at the top of the TED screen, presents IA code digits as they are entered at the Dual Tone Multi-Frequency (DTMF) keypad. Below the Indirect Access (IA) Display,

a Caller ID displays incoming calls waiting to be answered. The current call, as well as the previous 19 calls, are stored. The arrow keys to the left of the display scroll the queue and the adjacent select key highlights entries. A card file, located within the position console, houses the TED position electronics.

#### 3.1.2.2 Hardkey Positions

The hardkey positions in the ETVS are of the membrane type. This type of key is mechanically more reliable and provides a sealed panel surface. Throughout this manual the term “hardkey” refers to the *membrane hardkey* positions. The IBOP and MBOP position types differ in the amount of console panel area they occupy. IBOP positions require more area because the IBOP panel houses the position electronics and is larger. MBOP positions require less console panel area because a card file, located within the position console, houses the electronics. Thus, the MBOP panel is smaller. The MBOP interfaces with 20-button programmable DA selector modules; the IBOP interfaces with 35-button DA selector modules. Both the MBOP and IBOP interface with the Radio Selector Modules (refer to paragraph 2.2.2.3).

Both the IBOP and the MBOP come in normal and split versions as described in paragraph 3.2.1. **Figure 3-2** illustrates an example of an IBOP position and **Figure 3-3,** an example of an MBOP position.

At hardkey positions, the operator uses the IBOP and MBOP to place indirect access telephone and intercom calls, select special functions, route audio to the headset or speaker, and perform other position functions such as headset volume adjustment and panel illumination control. In addition, the operator has, as required, Direct Access (DA) selectors to place direct access telephone and intercom calls and Radio Selectors to control air-to-ground radio communications.

Hardkey positions also have IA and caller ID displays. At IBOP positions, they are located on an IA Module, and at MBOP positions, they are located directly on the MBOP.

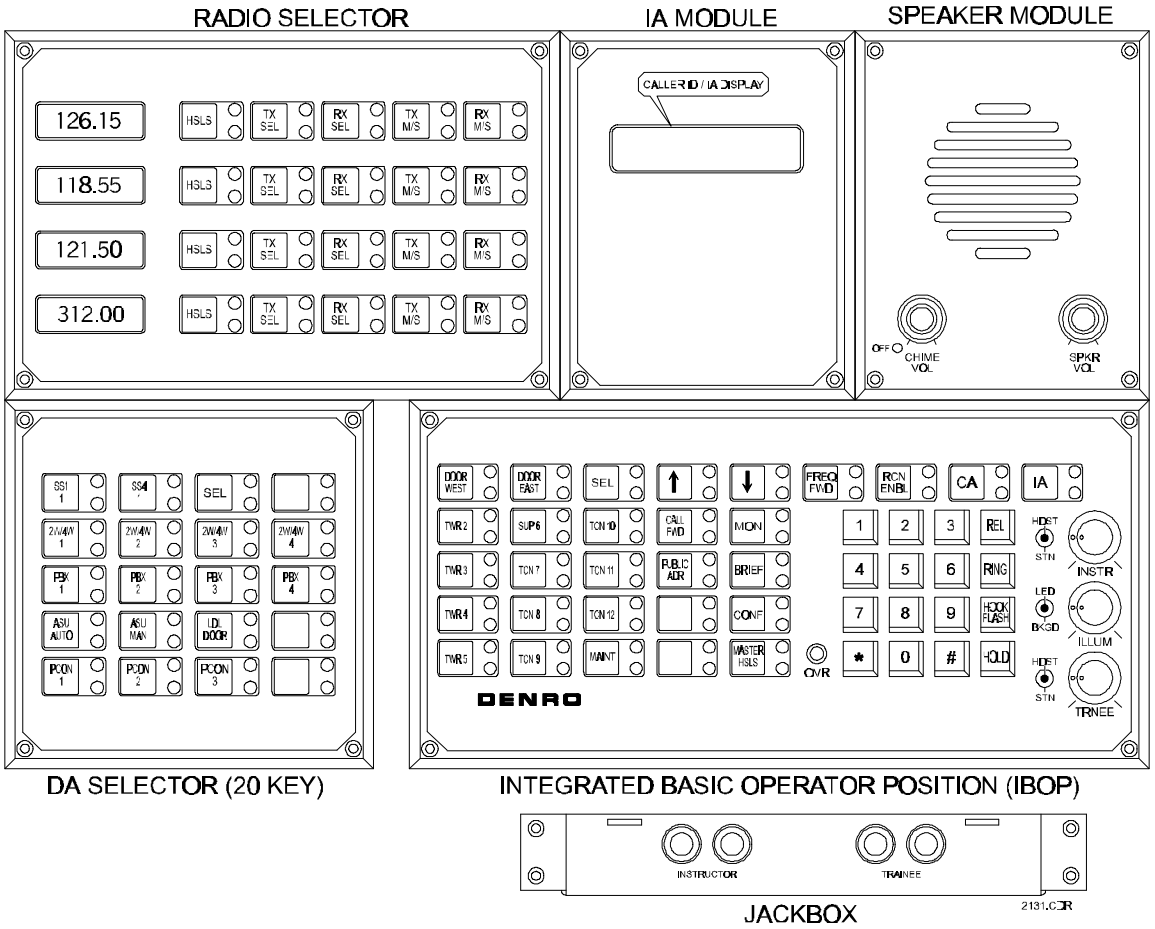


*Figure 3-2. Example of Hardkey IBOP Position Equipment*

### 3.1.2.3 Additional Position Equipment

All positions have the following additional equipment: a handset, a hand microphone, a headset with both a microphone and earphone, a loudspeaker, and a PTT footswitch (if required.) Front panel controls are provided at all positions for speaker volume, trainee headset volume, instructor headset volume, and display illumination.

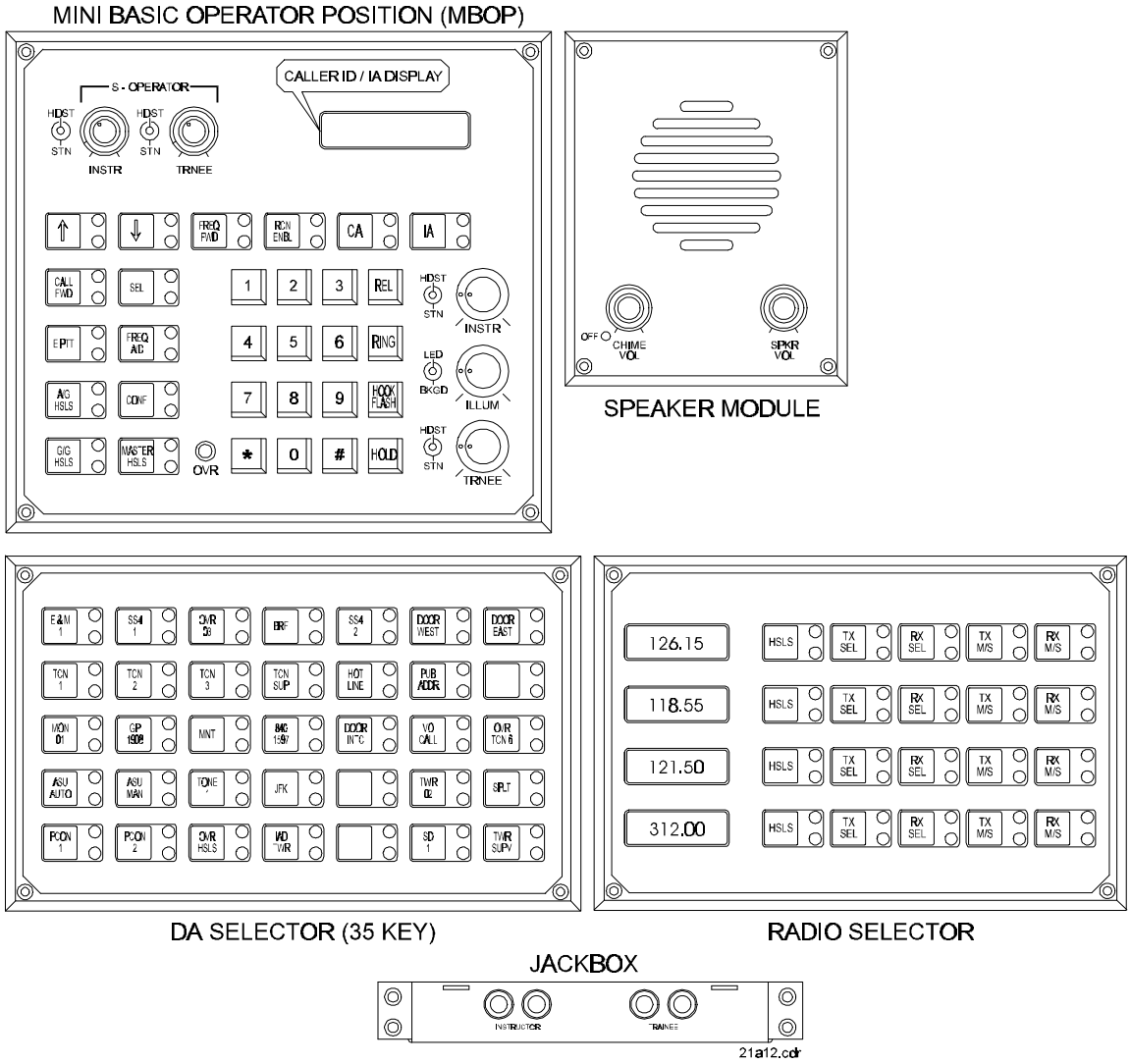


*Figure 3-3. Example of Hardkey MBOP Position Equipment*

### 3.1.2.4 Operator Keys

**DA Keys.** All positions configured with DA keys have DAs that enable the operator to directly call a particular position or telephone line assigned to the selected DA key. These keys are identified at the position by their destination, line, or party name, such as TWR 3, TCN 7, etc., as shown in the position illustrations. Once configured, these keys select the telephone or intercom line identified by the key name. They assume certain specific functions as selected at the SCT, such as locking or non-locking, ring/voice, etc., based on the requirements for the line. Refer to the SCT Users Manual for DA configuration.

**IA Keys.** If the operator must call another position or a phone for which there is no direct access, the position's indirect access (IA) numeric keypad may be used to dial a code number for the position.

**Special Function Keys.** Special function keys are provided to enable the operator to control telephone call status such as call hold and call forward.

**Radio Keys.** Radio keys are provided for radio communications and main/standby radio selection.

Visual and audible signals alert the operator when an incoming call is present and of the operational status of all active communications.

To operate the position, the user selects a feature by touching the desired key on the appropriate page on the TED or presses a hard key. Indicators associated with each key indicate the selection and the function is performed.

### 3.1.2.5 Key Allocations

This manual illustrates example key assignments for TED pages and hardkey panels. Because key assignments are configured from the SCT, the key arrangements for TED pages and hardkey panels may not look the same on your system as shown in the manual illustrations. However, the procedures for using the keys do not change. Certain keys, identified later in **Tables 3-1** and **3-2**, are fixed in the configuration software and cannot be reconfigured at the SCT/MCT.

### 3.1.3 Operational Features

The positions provide the following operational features:

1. Radio transmit
2. Radio receive
3. Radio Main/Standby (M/S) switching
4. Radio assignment
5. Radio preemption
6. DA phone/intercom call
7. IA phone/intercom call
8. Call forwarding
9. Call conferencing
10. Position confidence test
11. Frequency forwarding
12. Speed dialing
13. Relief Briefing
14. Position-to-position monitoring/monitor on hold (MOH)

There are three basic sets of communication control functions available at the position: radio, telephone, and intercom control, as described below.

a. The radio function provides a direct interface to a select number of radio transmitter and receiver frequencies. Selection of a particular radio for transmission is accomplished directly from the operator's position by pressing a single key. Individual radios can be selected or deselected for transmission from the positions. Additionally, the operator may monitor any frequency programmed at that position. Preemption priorities may be configured for up to five positions to allow priority access to certain selected frequencies for emergency or other uses. An emergency PTT feature enables the operator to make a priority transmission on a predefined group of emergency frequencies simultaneously.

b. The telephone interfaces provide for both direct and indirect access to selected telephone circuits, as determined by the site requirements. All telephone circuits are multiple access unless classmarked as private. This permits more than one operator voice access to the same circuit at the same time.

c. Intrafacility intercoms provide position-to-position communications with direct and indirect intercom access capability at each position and override capabilities for emergency or critical communications.

The system provides rapid communications by the use of 3-digit codes for selection of certain intercom lines. Dial codes are entered using the indirect access (IA) key and the standard number keys of the Dual Tone Multi-Frequency (DTMF) keypad. An IA display indicates the called party at the calling position and the calling party at the called position.

## 3.2 CONTROLS AND INDICATORS

### 3.2.1 Normal and Split-Position Equipment

The ETVS may be equipped with normal and, for high traffic situations, split positions. A normal position enables a single operator to control air-to-ground (A/G) and ground-to-ground (G/G) [interphone (IP), and intercom (IC)] communications using a single jackbox. **Figures 3-1, 3-2,** and **3-3** illustrate examples of TED, IBOP, and MBOP normal positions.

Split positions have two jackboxes and function in two modes; split and combined. In split mode, two operators use the position. One operator controls A/G traffic from one jackbox and the other operator controls G/G traffic from the other jackbox. In combined mode the position functions as a normal position except that the two jackboxes are functional. **Figures 3-4, 3-5,** and **3-6** illustrate examples of TED, IBOP, and MBOP split positions.

At split TED positions, the console has two TED displays. One display supports control of A/G traffic and the other G/G traffic. When the position is functioning in combined mode, the G/G TED is blank and its G/G keys appear on the A/G TED. At hardkey positions both operators use the appropriate keys available at the position for the traffic each operator controls.

Split positions have two speakers, each with chime and speaker volume controls. Split mode routes A/G audio to one speaker and G/G audio to the other. Combined mode routes G/G speaker audio to the A/G speaker. There are also independent headset volume controls for each jackbox that function in both split and combined modes. The G/G operator can monitor A/G traffic at the G/G jackbox and speaker by using the SPLIT MONITOR feature.

The jackboxes at normal and split positions accommodate a Trainee and an Instructor headset or handset. Normal, split and combined positions have relief briefing functions that allow the Instructor and Trainee at the associated jackbox to communicate with each other. Their conversation remains at the position but is recorded by the system legal recorder.

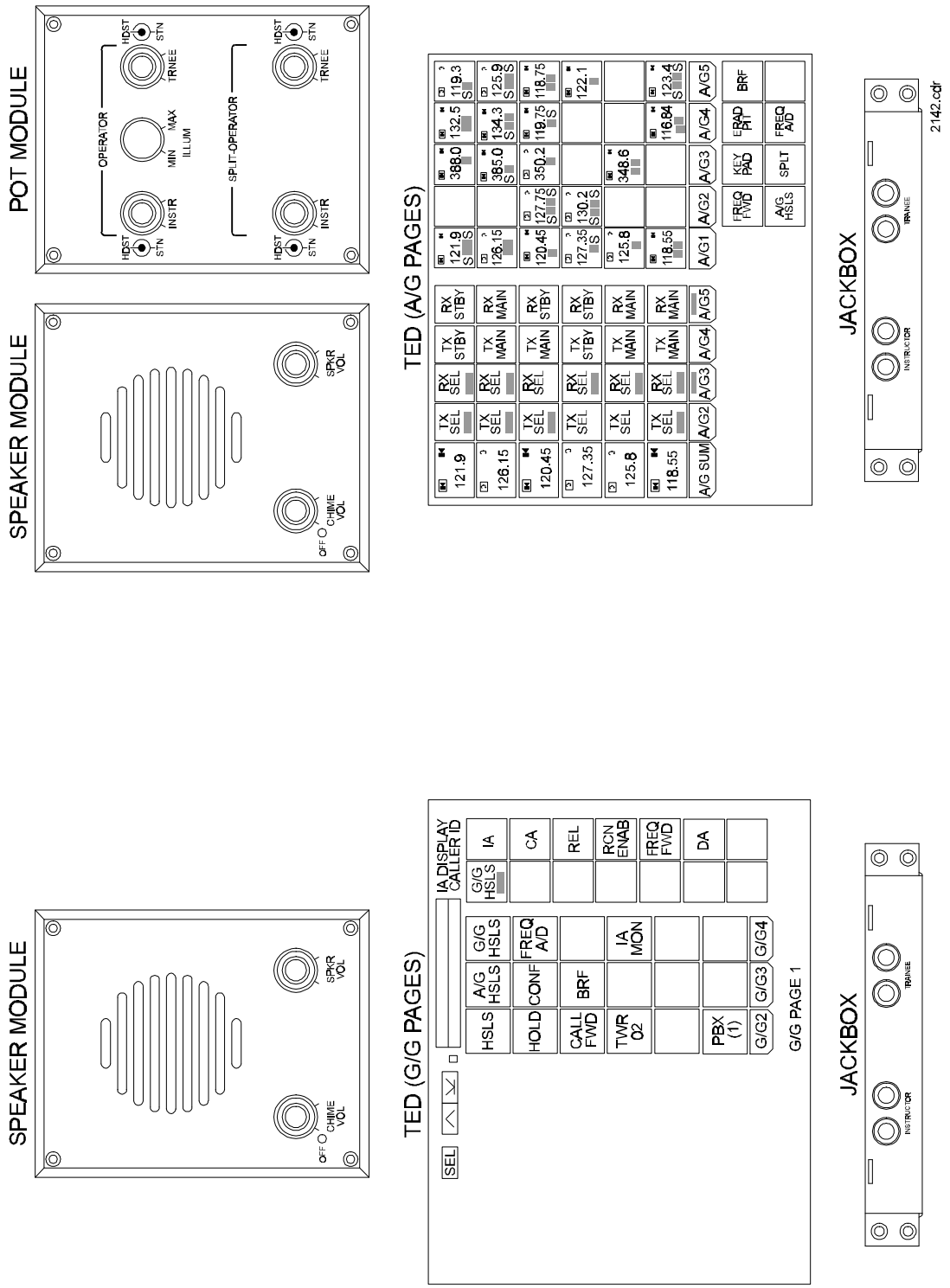


*Figure 3-4. Example of TED Split Position Equipment*

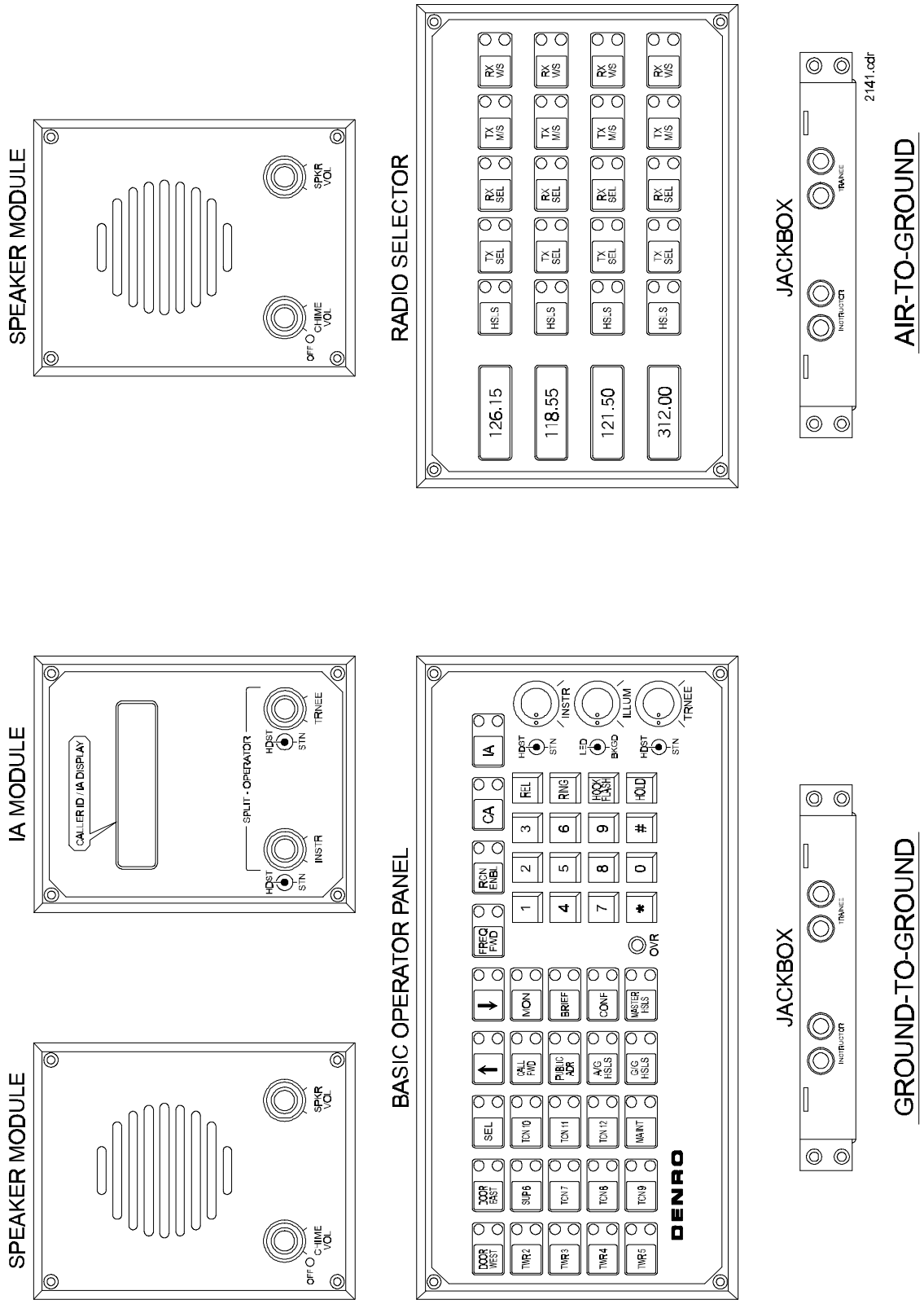


*Figure 3-5. Example of IBOP Hardkey Split Position Equipment*

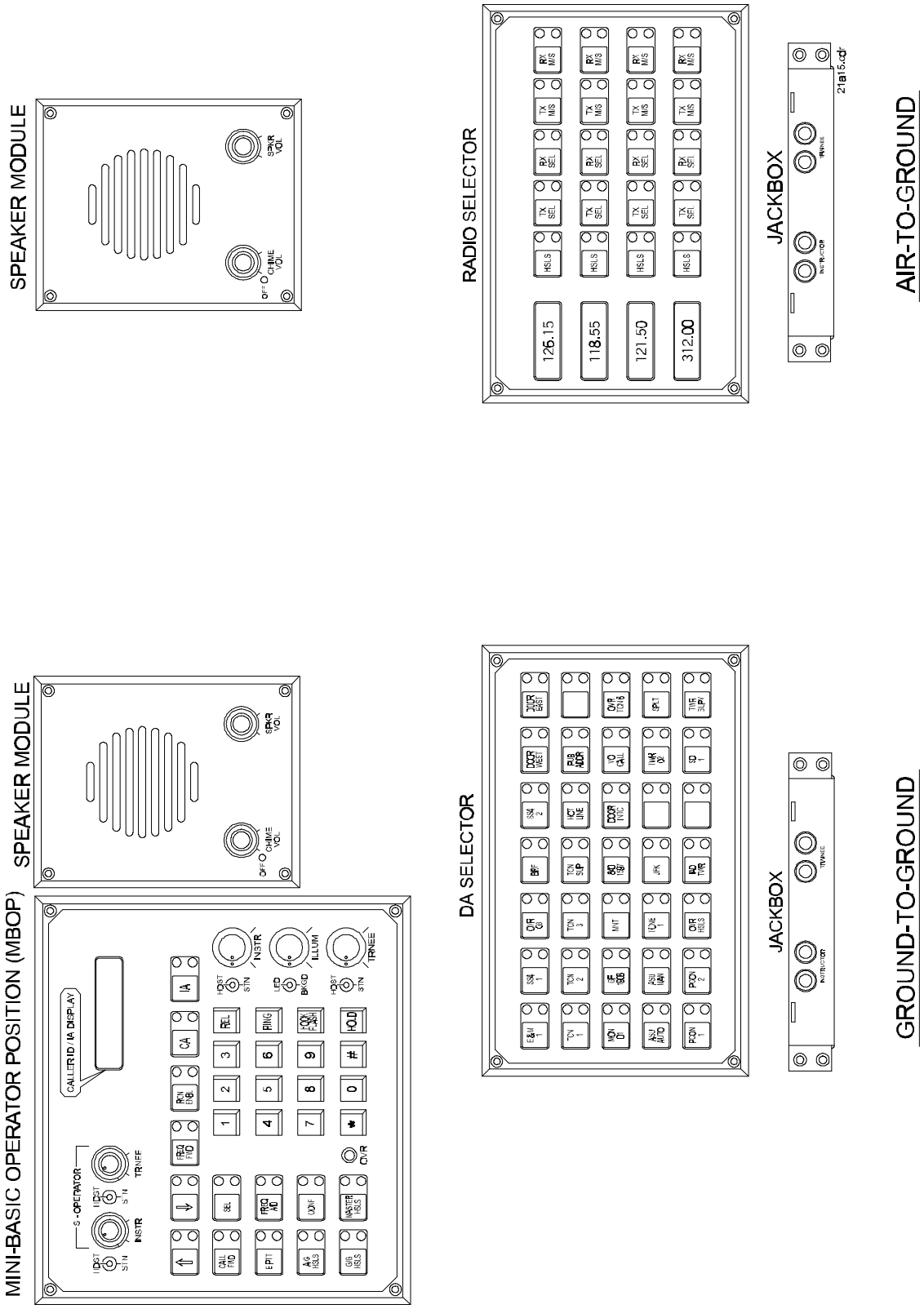


*Figure 3-6. Example of MBOP Split Position Equipment*

### 3.2.2 TED Position Controls and Indicators

The following position equipment is installed at a normal TED position ("Pot Module" is the manufacturer's name for the unit):

- Speaker module (**Figure 3-7**)
- Normal POT Module (**Figure 3-8**) with only normal operator controls
- Touch Entry Device (TED), (**Figures 3-9** and **3-10**)
- Jackbox

A split-TED position has the following additional equipment

- Speaker module
- Split POT Module (**Figure 3-8**) with both normal and split operator controls
- Touch Entry Device (TED)
- Second Jackbox

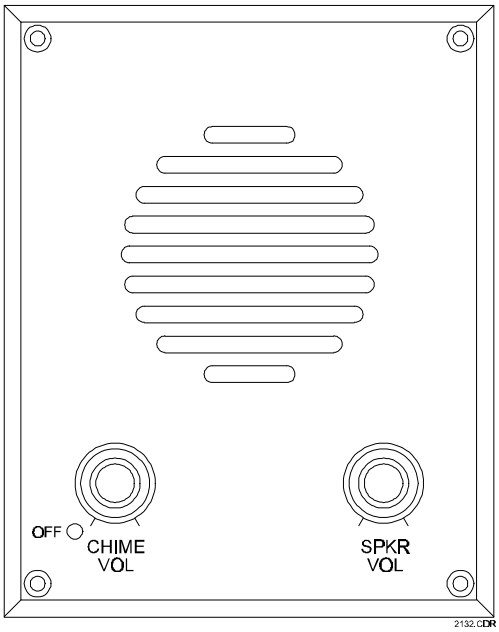


| Control or Indicator | Function |
|---|---|
| *Speaker module* | *Broadcasts receive audio and position chimes when the loudspeaker is selected by the operator.* |
| OFF | Illuminates to indicate position chime is OFF. |
| CHIME VOL | (Chime Volume) Adjusts chime level at the speaker. Turns chime OFF in fully counter clockwise position. |
| SPKR VOL | (Speaker Volume) Adjust audio level of radio, telephone, and intercom communications at the speaker. |

***Figure 3-7. TED Position Speaker Module***

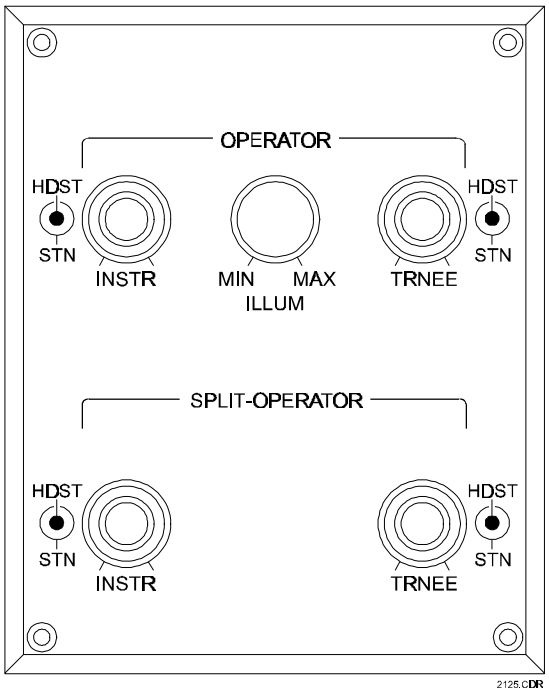


| *Control or Indicator* | *Function* |
|---|---|
| *POT Module* | *Controls TED position normal and split operator headset receive audio and sidetone volume and TED screen illumination.* |
| HDST/STN | (Headset/Sidetone) The INSTR and TRNEE controls are of dual concentric type. |
| | HDST identifies the function of the headset audio level control (center) and STN identifies the function of the headset sidetone level control (outer). |
| INSTR | (Instructor) Adjusts communications audio level at the instructor's headset/handset (see HDST/STN definition). |
| | TRNEE (Trainee) Adjusts communications audio level at the trainee's headset/handset (see HDST/STN definition). |
| TRNEE | (Trainee) Adjusts communications audio level at the trainee's headset/handset (see HDST/STN definition). |
| ILLUM | (Illumination) Adjusts the brightness of the TED screen. |
| NOTE: Normal positions do not have the split-operator INSTR and TRNEE volume controls | |

***Figure 3-8. TED Split Pot Module***

**Figure 3-9** illustrates typical TED radio, direct access telephone and intercom, and special function pages. **Figure 3-10** shows the same TED with the radio summary page and G/G Page 1 visible.

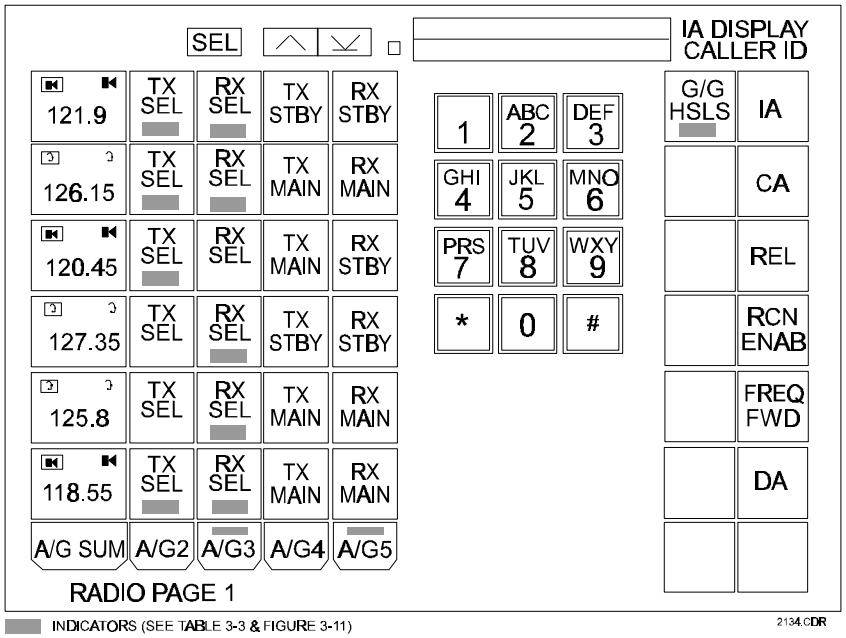


*Figure 3-9. TED Radio, DTMF Keyset, and Special Function Pages*

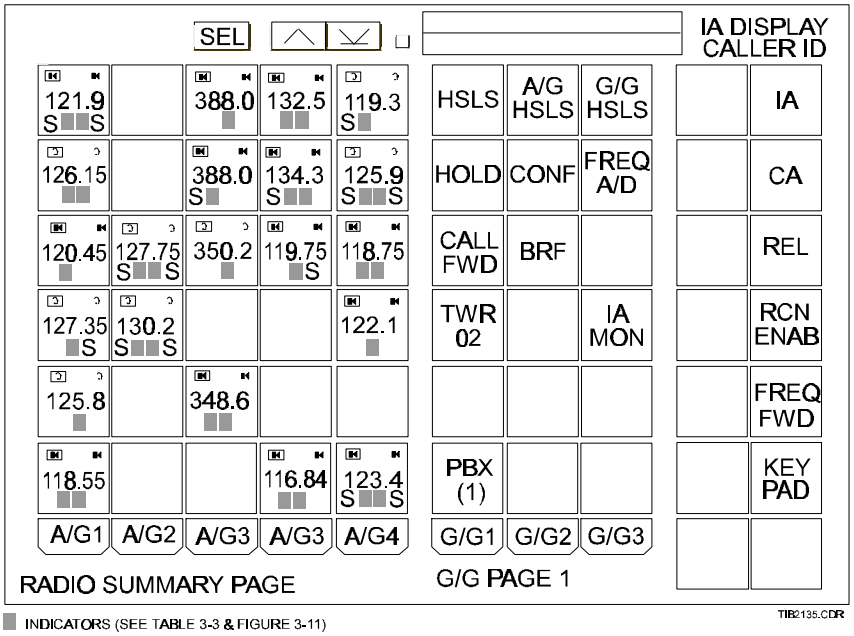


*Figure 3-10. TED Radio Summary, Direct Access, and Special Function Pages*

**Table 3-1** defines the key functions available on the TED pages. Touch keys are of two different types, locking and non-locking. Locking keys have a toggle on/off format and non-locking keys a touch-on/release-off format. Non-locking keys are identified by an asterisk in **Table 3-1**. (Refer to paragraphs 3.1.2.4 and 3.1.2.5.)

***Table 3-1. TED Key Functions***

| ***Control or Indicator*** | ***Function (*=non-locking key)*** |
|---|---|
| *A/G Pages* | |
| | Pages 1–5 contain keys to control transmit and receive radio signal paths for the frequencies assigned to the position. The Summary Page provides a status view of all frequencies assigned to the position. |
| A/G SUM, A/G 1 etc. | (A/G Summary Page, A/G 1 Page etc.) Select desired radio control page. Current page title is displayed at the base of the key display area. |
| Frequency Key | On pages 1–5, identifies the radio frequency that is controlled by the 4 keys to its right. Press this key to route radio receive audio to the headset or speaker for this frequency. Refer to **Figure 3-9**. |
| Summary Page | The Summary Page displays the Frequency keys for all the frequencies assigned to the position. Selecting a Frequency key on this page displays the complete key set associated with the Frequency key at the base of the page. |
| TX SEL | (Transmit Select) Selects the transmit audio path to the radio associated with the Frequency Key. |
| RX SEL | (Receive Select) Selects the receive audio path from the receiver associated with the Frequency key. |
| TX MAIN/STNBY | (Transmitter Main/Standby) Selects the main or standby transmitter associated with the frequency key. |
| RX MAIN/STNBY | (Receiver Main/Standby) Selects the main or standby receiver associated with the frequency key. |
| *G/G Pages 1-3* | |
| | Page 1 of the G/G pages contains keys that control special functions applicable to radio, telephone, and intercom communications. Pages 2 and 3 contain direct access keys to telephone lines and intercom circuits (identified by destination, line, or party name; for example, PBX1 and TWR2) and some special function keys. |
| | (G/G 1 Page, etc.) Select desired telephone intercom and special function control pages. Current page title is displayed at the base of the key display area. |
| HSLS | (Headset/Loudspeaker) Master switch that routes all audio to the speaker or headset regardless of its routing set for individual radio frequencies at the Frequency Keys. (Refer to **Table 3-5.)** |

### *Table 3-1. TED Key Functions (Continued)*

| *Control or Indicator* | *Function (*=non-locking key)* |
|---|---|
| A/G HSLS | (Air-to-ground Headset/Loudspeaker) Toggle switch that routes all A/G audio to the speaker or headset regardless of the routing set at the Frequency Keys.<br>If the HSLS key has been used to route audio to the speaker, this key has no effect. (Refer to **Table 3-5**.) |
| G/G HSLS | (Ground-to-ground Headset/Loudspeaker) Toggle switch that routes all G/G audio to the speaker or headset.<br>If the HSLS key has been used to route audio to the speaker, this key has no effect. (Refer to **Table 3-5**.) |
| OVR HSLS | (Override Headset/Loudspeaker) Toggle switch that routes override audio to the speaker or headset.<br>If the HSLS key has been used to route audio to the speaker, this key has no effect. (Refer to **Table 3-5**.) |
| CONF | (Conference) Initiates a conference call setup using direct access (DA) keys or indirect access (IA) codes.<br>Numbered or labeled CONF keys establish a call to a predefined conference group and rings all group parties. (See PRE CON)<br>This key initiates call setups, reconnects conference calls that are on hold, and permits called parties to drop from conferences. You can only put conference calls on hold if your position configuration includes a CONF key. |
| FREQ A/D | (Frequency Add/Delete) Displays the add/delete radio frequency dialogue box. |
| CALL FWD | (Call Forward) Initiates forwarding of all calls from one position to another position selected to accept the calls. |
| HOLD | Places an existing telephone call (PBX, ASU, or 2/4-Wire) on hold. |
| IA MON | (Indirect Access Monitor) Initiates an audio monitor setup using IA codes that enables the operator to monitor audio at up to five positions. |
| PRE CON | (Preset Conference) Initiates a conference of predefined parties. The called positions chime until the conference call is answered by each party.<br>You can only put a preset conference on hold if your position configuration includes a CONF key. (Conference call answer, hold, override, and released operations apply to this function. |
| SPLT | (Split) Selects split-position mode. G/G control is handed off to the G/G operator's TED. |

### *Table 3-1. TED Key Functions (Continued)*

| *Control or Indicator* | *Function (*=non-locking key)* |
|---|---|
| BRF | Available in both normal and split modes. Enables the instructor and trainee at a single position to communicate with each other. If a radio transmission is made while BRF is selected, the operator that activates PTT is unable to hear the second operator during the transmission; however, the second operator is able to monitor the first operator's radio communication. |
| SPLIT BRF | (Split Brief) Available in split mode only. Enables the instructor and trainee at a single position to communicate with each other. |
| XFER OVR | (Transfer Override) Overrides the automatic transfer of radio audio to the speaker when a G/G call is initiated. |
| * ERAD PTT * | (Emergency Radio PTT) Transmits a PTT signal to key a group of preassigned radio frequencies. |
| A/G CPL | (Air-to-ground Couple) Enables a G/G party to hear A/G traffic over both sides (XMIT and RCV) of an A/G circuit when the selected frequency is coupled to the active G/G line. |
| *RING* | Non-locking switch that provides ring voltage to ASU 4-wire PBX telephone circuits requiring manual ring. |
| FLASH | (Hook Flash) Transmits a hook flash signal over the G/G circuit connection. |
| SPLT MON | (Split Monitor) Allows the split position's G/G operator to monitor the communications at the A/G operator's headset and speaker. |
| * DOOR * | Non-locking key that releases the facility door lock. |
| | There may be more than one facility door key (e.g., Door East, Door West, etc.). |
| *G/G Pages 1-3* | |
| *Special Functions (all are fixed keys)* | |
| | Some special function keys are included on the G/G pages. Refer to G/G Pages 1-3. |
| IA | (Indirect Access) Initiates an indirect access call using IA codes entered on the DTMF keypad (see KEY PAD). |
| CA | (Common Answer) Connects operator to incoming calls for which there is no DA key on the G/G pages. Indications are the same as the DA key. |
| REL | (Release) Terminates telephone and intercom calls, except calls on HOLD. |

***Table 3-1. TED Key Functions (Continued)***

| *Control or Indicator* | *Function (*=non-locking key)* |
|---|---|
| RCN ENBL | (Reconfigure Enable) Accepts a new position configuration map (local map) in response to a download command from the Supervisor. The old map is retained in memory and the position assumes the new configuration. It is not necessary to deselect any active function or circuits to accept a new map.<br>CAUTION<br>Reconfiguration can interrupt existing communications and must not be enabled until after the communications are completed. |
| FREQ FWD | (Frequency Forward) Initiates forwarding of all frequencies assigned to one position to another position. This command does not forward frequency assignments common to both positions. |
| Up/Down Arrow | Scrolls through the information currently displayed in the Caller ID or IA displays. |
| KEY PAD/DA | (Keypad) Toggle switch that exchanges the G/G pages with a standard DTMF keyset on the TED display. |
| SEL | (Select) Selects between the Caller ID and IA displays. |

### 3.2.2.1 TED Radio Key Set

A set of five keys controls the operator functions available for each radio frequency as illustrated in **Figure 3-11**. The figure includes summary page and radio page key indicators. Refer to **Table 3-1** for a functional definition of each key.

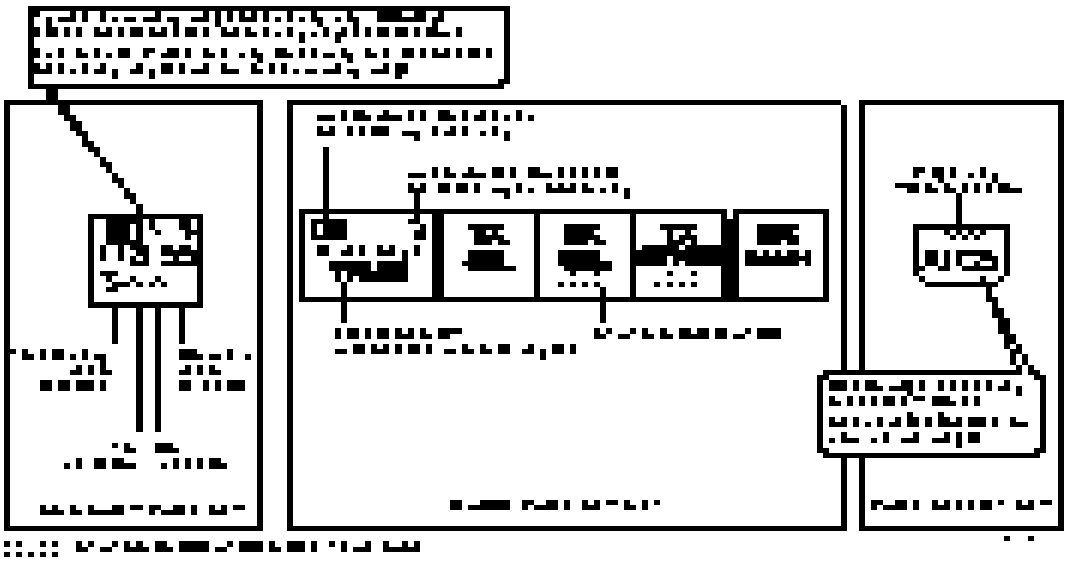

***Figure 3-11. Radio Frequency Key Set with Indicators***

### 3.2.3 Hardkey Position Controls and Indicators

The following position equipment is installed at a normal IBOP position:

- Speaker module (**Figure 3-12**)
- Radio Selector (**Figure 3-17**)
- Direct Access Selector (20-key or 35-key **Figure 3-16**)
- Integrated Basic Operator Position (IBOP) Panel (**Figure 3-14**)
- Normal IA Module (same as **Figure 3-13**, but no volume controls)
- Jackbox

A split IBOP position has the following additional equipment:

- Second Speaker module
- Split IA Module w/Pots (**Figure 3-13**)
- Second Jackbox

The following position equipment is installed at a normal MBOP position:

- Speaker module (**Figure 3-12**)
- Radio Selector (similar to **Figure 3-17**)
- Direct Access Selector (35-key **Figure 3-16**)
- Normal Mini-basic Operator Position (MBOP) Panel (**Figure 3-15**)
- Jackbox

A split MBOP position has the following equipment:

- Two Speaker modules
- Radio Selector (similar to **Figure 3-17**)
- Direct Access Selector (**Figure 3-16**)
- Split Mini-basic Operator Position (MBOP) Panel **(Figure 3-15**)
- Two Jackboxes

IBOP and MBOP positions can also utilize:

- Programmable DA Selectors (**Figure 3-18**)

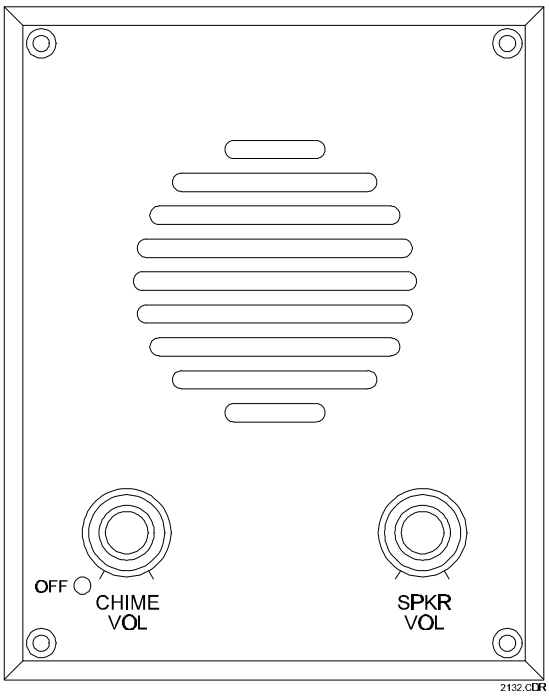


| Control or Indicator | Function |
|---|---|
| *Speaker module* | *Broadcasts receive audio and position chimes when the loudspeaker is selected by the operator.* |
| OFF | Illuminates to indicate position chime is OFF. |
| CHIME VOL | (Chime Volume) Adjusts chime level at the speaker. Turns chime OFF in fully counter clockwise position. |
| SPKR VOL | (Speaker Volume) Adjust audio level of radio, telephone, and intercom communications at the speaker. |

***Figure 3-12. Hardkey Position Speaker Module***

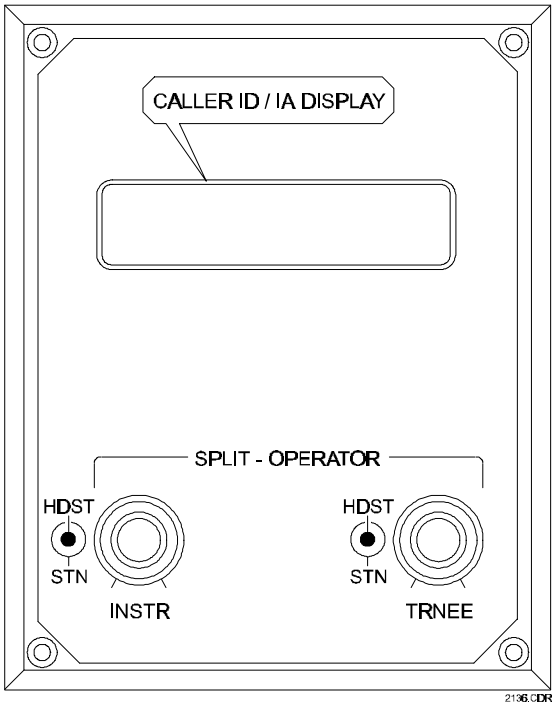


| *Control or Indicator* | *Function* |
|---|---|
| *IA Module Display w/Pots* | *Controls split hardkey position INSTR and TRNEE operator headset receive audio and sidetone volume and displays IA codes and caller IDs.* |
| LCD | Two-line display showing outgoing calls and incoming caller activity. |
| HDST/STN | (Headset/Sidetone) The INSTR and TRNEE controls are of dual concentric type |
| INSTR | (Instructor) Adjusts communications audio level at the instructor's headset/handset (see HDST/STN definition). |
| TRNEE | (Trainee) Adjusts communications audio level at the trainee's headset/handset (see HDST/STN definition). |
| NOTE: A normal position IA Module Display is identical to the split assembly but without the INSTR and TRNEE volume controls. | |

***Figure 3-13. Hardkey IA Module Display w/Pots***

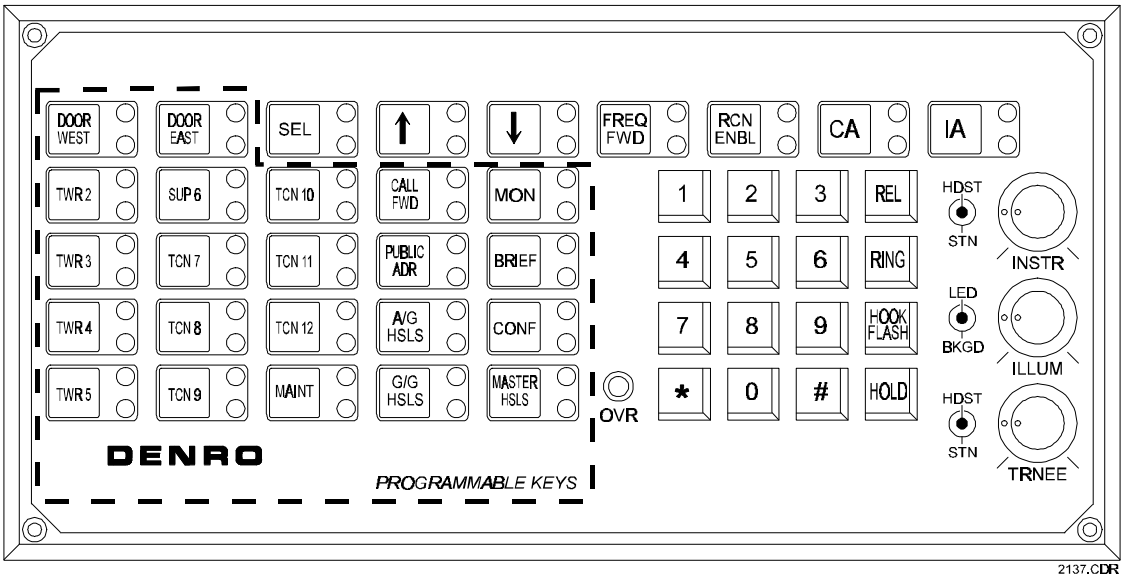


| Control or Indicator | Function |
|---|---|
| *Integrated Basic Operator Position (IBOP) Panel* | |
| | *Basic position control panel with receive audio and sidetone volume controls and key illumination control.* |
| HDST/STN | (Headset/Sidetone) The INSTR and TRNEE controls are of dual concentric type.<br>HDST identifies the function of the headset audio level control (center) and STN identifies the function of the headset sidetone level control (outer). |
| INSTR | (Instructor) Adjusts communications audio level at the instructor's headset/handset (see HDST/STN definition). |
| TRNEE | (Trainee) Adjusts communications audio level at the trainee's headset/handset (see HDST/STN definition). |
| ILLUM | (Illumination) Adjusts the brightness of the LEDs and background illumination. |
| OVR | Indicates presence of an override call at the position. |
| NOTE: Refer to **Table 3-2** for all key names and their functions. | |

***Figure 3-14. Integrated Basic Operator Position (IBOP) Panel***

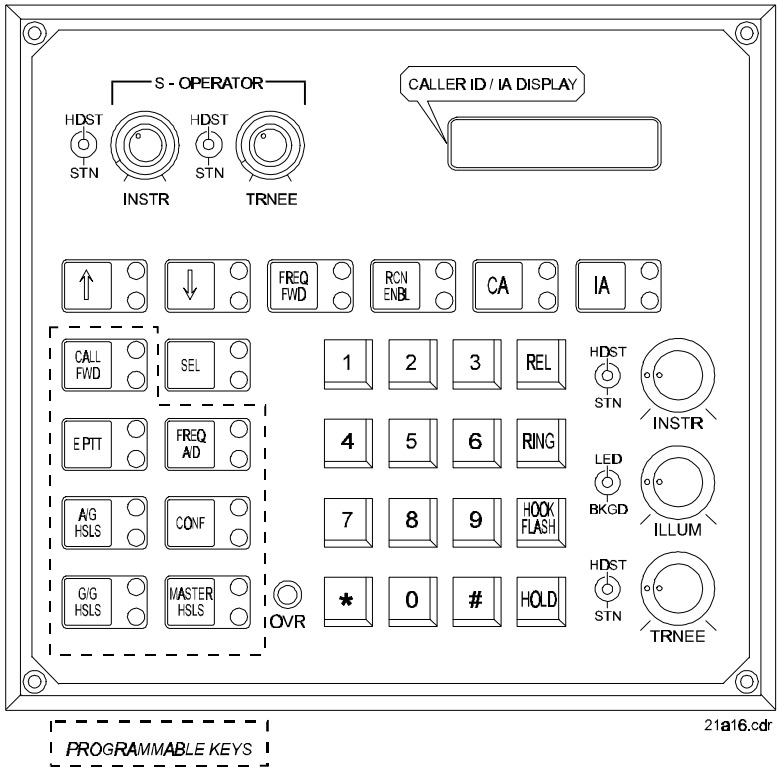


NOTE: The Mini-BOP controls and indicators are the same as the IBOP, except that only 7 keys are programmable as indicated in the figure.

The IA display and split-operator volume controls are identical to the IA Module (**Figure 3-13**). At normal positions, the split volume controls do not function.

***Figure 3-15. Mini-Basic Operator Position (MBOP) Panel***

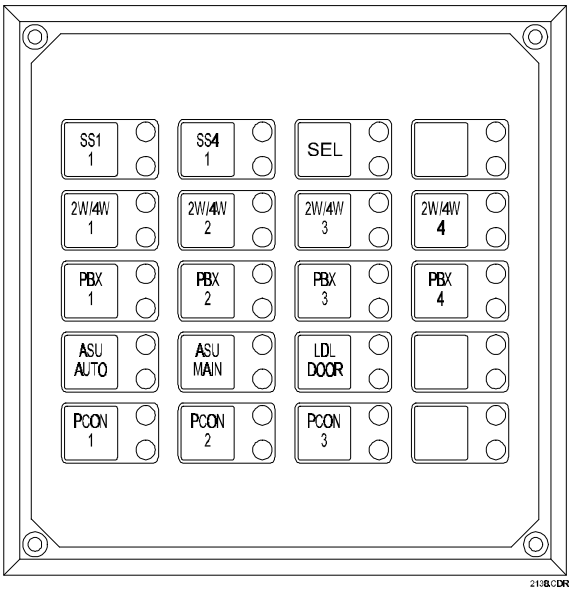


NOTE: Refer to **Table 3-2** for all key names and their functions.

***Figure 3-16. DA Selector, 20-Key or 35-Key (20-key shown)***

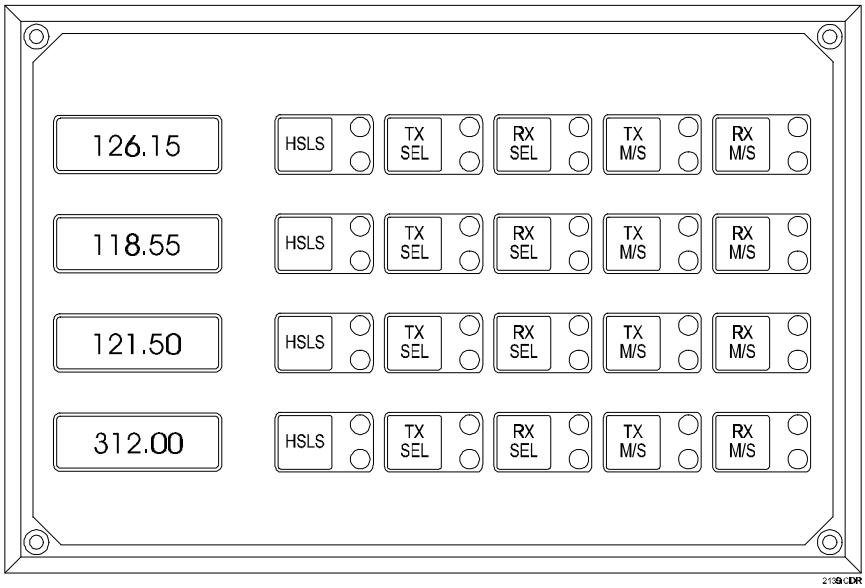


NOTE: Refer to **Table 3-2** for all key names and their functions.

Displays two pages of radio frequencies (see **Table 3-2**, PAGE key).

***Figure 3-17. Radio Selector***

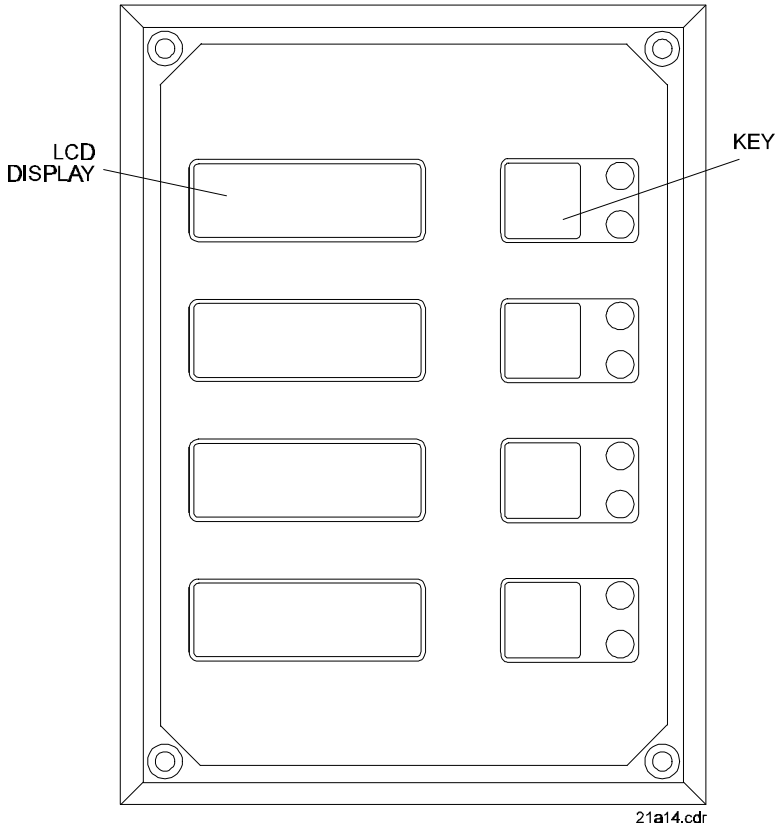


NOTE: The Programmable DA Selector keys function identically to the standard DA Selector. To enter key names in the LCD displays next to each key, the supervisor must use the SCT (refer to procedure in SCT manual).

***Figure 3-18. Programmable DA Selector***

**Table 3-2** defines the key functions available on the hardkey panels. Hard keys are of two different types, locking and non-locking. Locking keys have a toggle on/off format and non-locking keys a touch-on/release-off format. Non-locking keys are identified by an asterisk in **Table 3-2**.

***Table 3-2. Hardkey Position Key Functions***

| ***Control or Indicator*** | ***Function (*=non-locking key)*** |
|---|---|
| *Radio Selector* | |
| Frequency Window | Displays the current radio frequency controlled by the associated key set to the right of the window. |
| HSLS | Routes audio associated with the displayed frequency to the headset or speaker. |
| TX SEL | (Transmit Select) Selects the transmit audio path to the radio transmitter associated with the displayed frequency. |
| RX SEL | (Receive Select) Selects the receive audio path from the radio receiver associated with the displayed frequency. |
| TX M/S | (Transmitter Main/Standby) Selects the main or standby transmitter associated with the displayed frequency. |
| RX M/S | (Receiver Main/Standby) Selects the main or standby receiver associated with the displayed frequency. |
| *BOP and DA Selectors (the DA selector contains additional DA keys)* | |
| | Direct access keys to telephone lines and intercom circuits are identified by destination, line, or party name (for example, PBX1 and TWR2) |
| PAGE | Toggles radio selector displays and keys between two pages of radio frequencies. Does not affect key selections. Key indicator flashes if VOX occurs on a hidden page. |
| MASTER HSLS | (Headset/Loudspeaker) Toggle switch that routes all audio to the speaker or headset regardless of its routing set for individual radio frequencies at the HSLS key. (Refer to **Table 3-5**.) |
| A/G HSLS | (Air-to-ground Headset/Loudspeaker) Toggle switch that routes all A/G audio to the speaker or headset regardless of the routing set at the HSLS keys. |
| | If the MASTER HSLS key has been used to route audio to the speaker, this key has no effect (Refer to **Table 3-5**.) |
| G/G HSLS | (Ground-to-ground Headset/Loudspeaker) Toggle switch that routes all G/G audio to the speaker or headset. |
| | If the MASTER HSLS key has been used to route audio to the speaker, this key has no effect. (Refer to **Table 3-5**.) |
| OVR HSLS | (Override Headset/Loudspeaker) Toggle switch that routes override audio to the speaker or headset. |
| | If the MASTER HSLS key has been used to route audio to the speaker, this key has no effect. (Refer to **Table 3-5**.) |

***Table 3-2. Hardkey Position Key Functions (Continued)***

| ***Control or Indicator*** | ***Function (*=non-locking key)*** |
|---|---|
| CONF | (Conference) Initiates a conference call setup using direct access (DA) keys or indirect access (IA) codes.<br>Numbered or labeled CONF keys establish a call to a predefined conference group and rings all group parties.<br>This key initiates conference call setups, reconnects conference calls that are on hold, and permits called parties to drop from conferences. It cannot be used to answer conference calls. You can only put conference calls on hold if your position configuration includes a CONF key. |
| FREQ A/D | (Frequency Add/Delete) Displays the add/delete radio frequency menu in the Caller ID display. |
| CALL FWD | (Call Forward) Initiates forwarding of all calls from one position to another position selected to accept the calls.<br>(NOTE: CALL FWD also releases forwarded calls.) |
| HOLD | Places an existing telephone call (PBX, ASU, or 2/4-Wire) on hold. |
| IA MON | (Indirect Access Monitor) Initiates an audio monitor setup using IA codes that enables the operator to monitor audio at up to five positions. |
| PRECON | (Preset Conference) Initiates a conference of predefined parties as configured at the SCT. The called positions chime until the conference call is answered by each party.<br>(NOTE: PRECON is just a sample label. Normally, the site would label the preset conference with its actual name.)<br>You can only put a preset conference on hold if your position configuration includes a CONF key. (Conference call answer, hold, override, and release operations also apply to this function.) |
| SPLT | (Split) Selects split-position mode. G/G control is handed off to the G/G operator's hardkey suite. |
| BRF | (A/G Brief) Available in both normal and split modes. Enables the instructor and trainee at a single position to communicate with each other. If a radio transmission is made while BRF is selected, the operator that activates PTT is unable to hear the second operator during the transmission; however, the second operator is able to monitor the first operator's radio communication. |
| SPLIT BRF | (Split Brief) Available in split mode only. Enables the instructor and trainee at a single position to communicate with each other. |
| XFER OVR | (Transfer Override) Overrides the automatic transfer of radio audio to the speaker when a G/G call is initiated. |
| *ERAD PTT* | (Emergency Radio PTT) Transmits a PTT signal to key an exclusive group of preassigned radio frequencies. (Only for emergency transmissions.) Non-locking switch. |

### *Table 3-2. Hardkey Position Key Functions (Continued)*

| *Control or Indicator* | *Function (*=non-locking key)* |
|---|---|
| A/G CPL | (Air-to-ground Couple) Enables a G/G party to hear A/G traffic over an RX frequency (also TX) when the selected frequency is coupled to the active G/G line. |
| *RING* | Non-locking switch that provides ring voltage to ASU 4-wire PBX telephone circuits requiring manual ring. |
| SPLT MON | (Split Monitor) Allows the split position's G/G operator to monitor the communications at the A/G operator's headset and speaker. |
| *DOOR* | "Non-locking key" that releases the facility door lock. |
| | There may be more than one facility door key (e.g., Door East, Door West, etc.). |
| *BOP Panel Special Function Keys (all are fixed keys)* | |
| IA | (Indirect Access) Initiates an indirect access call using IA codes entered on the DTMF keypad (see KEYPAD). |
| CA | (Common Answer) Connects operator to incoming calls for which there is no DA key on the selector. Indications are the same as the DA key. |
| REL | (Release) Terminates telephone and intercom calls, except calls on HOLD. |
| RCN ENBL | (Reconfigure Enable) Accepts a new position configuration map (local map) in response to a download command from the Supervisor. The old map is retained in memory and the position assumes the new configuration. It is not necessary to deselect any active function or circuits to accept a new map. |
| FREQ FWD | (Frequency Forward) Initiates forwarding of all frequencies assigned to one position to another position. This command does not forward frequency assignments common to both positions. |
| FLASH | (Hook Flash) Transmits a hook flash signal over the G/G circuit connection. |
| Up/Down Arrow | Scrolls through the information currently displayed in the Caller ID or IA displays. |
| KEYPAD | Standard DTMF keyset including 0-9, *, and # keys. |
| | (Two function selector selects either the keypad or the DA selectors.) |
| SEL | (select) Selects between the Caller ID and IA displays. |

### 3.2.3.1 Hardkey Radio Key Set

A set of five keys controls the operator functions available for each radio frequency as illustrated in **Figure 3-19**. Refer to **Table 3-2** for a functional definition of each key.

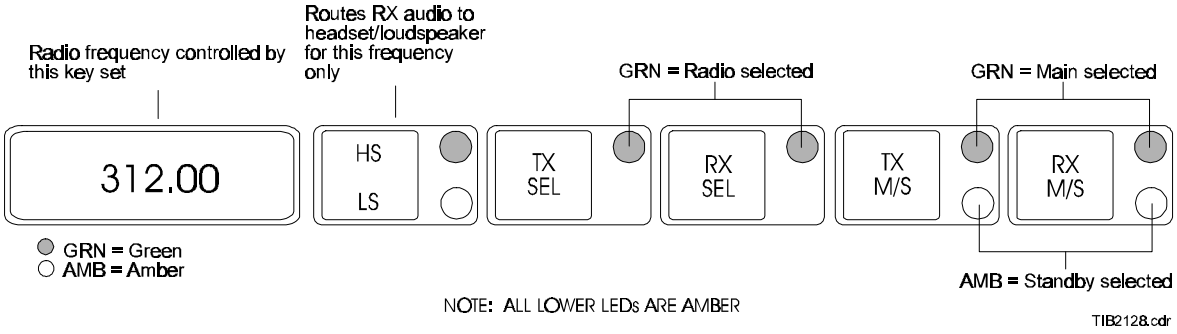


*Figure 3-19. Radio Frequency Key Set with Indicators*

### 3.2.4 Audio Routing

Audio routing functions at both the TED and hardkey positions are identical; however, the key names differ. **Figure 3-20** illustrates the keys used to control audio routing at each type of position. **Table 3-5** provides details about audio routing using both types of keys.

### 3.2.4.1 Software Managed Position Audio Routing

When the operator conducts A/G and G/G communications concurrently, the operator software determines audio routing within the position based on the PTT Alternative programmed at the SCT for the position (refer to *SCT User Manual*, paragraph 2.4.2.5).

If PTT Alternative 1 is programmed, A/G and G/G communications can occur concurrently. The G/G parties can hear the A/G communication. If the operator has routed incoming G/G audio to the headset, the operator software switches G/G audio to the loudspeaker during A/G PTT keying. When the operator releases PTT, incoming G/G audio returns to the headset.

If PTT Alternative 2 is programmed, the operator cannot activate A/G PTT with a G/G line selected. However, selecting a G/G line during an ongoing A/G transmission will not interrupt the A/G transmission until the operator releases PTT. During this time,

G/G incoming audio emits from the position speaker. After PTT release, A/G transmit communications cease.

In both PTT Alternatives, the operator software does not automatically transfer incoming override calls to the loudspeaker during A/G PTT. (Incoming override calls are not subject to PTT Alternative 2.)

### 3.2.5 Communications Status Indicators

**Table 3-3** provides the key status indications found at both TED and hardkey positions. They are identical except that RED at the TED positions is replaced by AMBER at the hardkey positions.

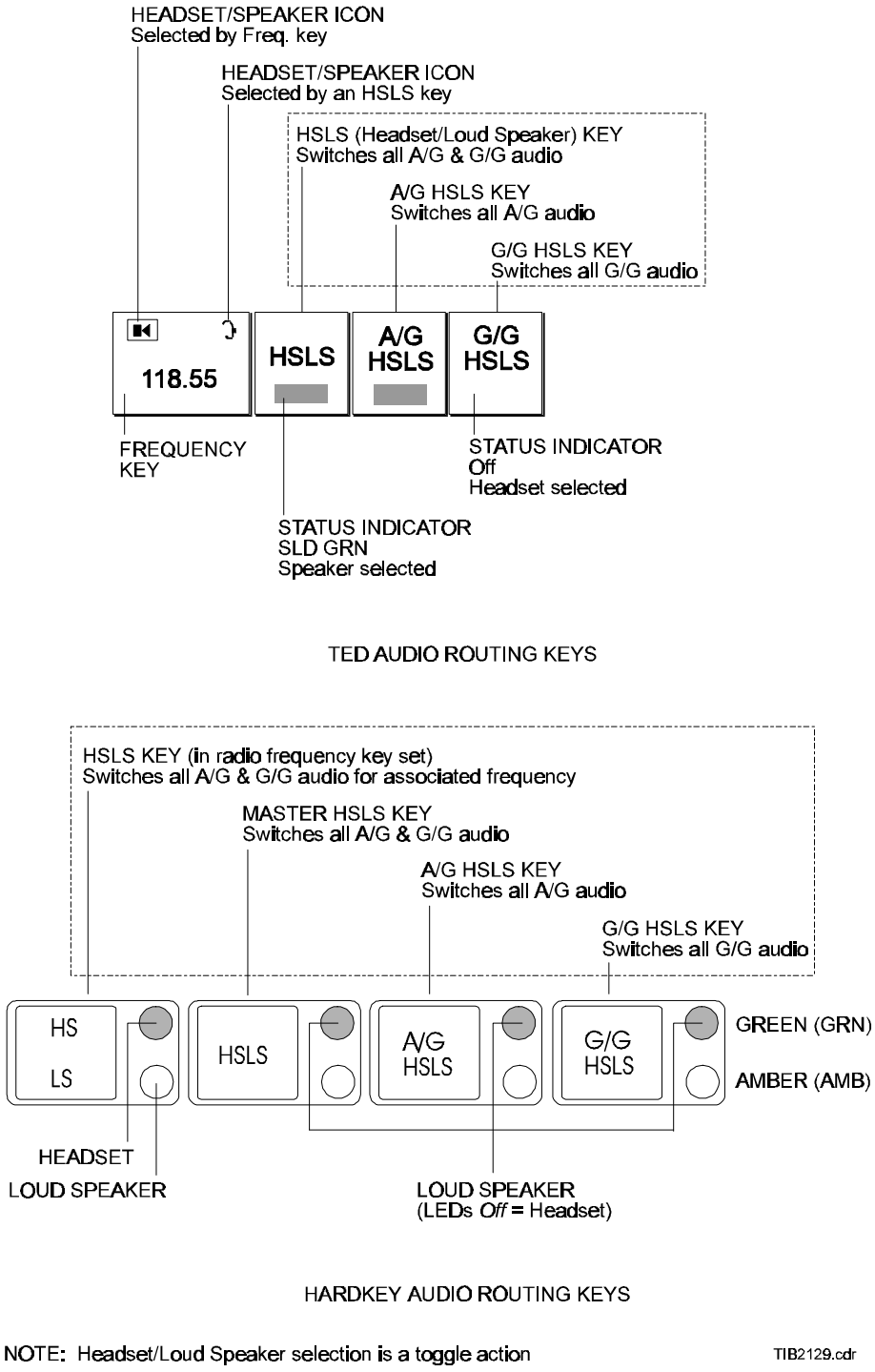


*Figure 3-20. Audio Routing Keys*

## *Table 3-3. Key Attributes*

*Legend:* Flash = 50% on/50% off, 60 times per minute
Flutter = 90% on/10% off, 72 times per minute
Wink = 10% on/90% off, 60 times per minute

| ***Indication*** | ***Function Status*** |
|---|---|
| *TX Radio Keys* | |
| Off | TX not selected |
| SOLID GREEN | SLD GRN TX selected but idle |
| FLUTTER GREEN | TX selected and keyed |
| SOLID RED (AMB) | TX keyed and locked out; keyed at another position |
| FLUTTER RED (AMB) | TX is selected and keyed from another position |
| FLASH RED | TX is keyed at another position |
| *RX Radio Keys* | |
| Off | RX not selected and idle |
| SOLID GREEN | RX selected but idle |
| FLUTTER RED (AMB) | RX not selected, VOX (RX audio) present |
| FLUTTER GREEN | RX selected, VOX present |
| *M/S Radio Keys* | |
| SOLID GREEN | Main unit selected |
| SOLID RED (AMB) | Standby unit selected |
| *Radio Page Select Keys* | |
| FLASH GREEN | VOX on non-visible pages |
| *Telephone, Intercom Keys* | |
| OFF | Not in use |
| SOLID GREEN | SLD GRN Selected |
| FLASH GREEN | Incoming call present |
| FLUTTER GREEN | Incoming call accepted |
| | Outgoing call connected |
| SOLID RED (AMB) | Line in use |
| WINK RED (AMB) | Call on hold |
| NOTE: Hardkey indicators are identified in parentheses if they differ from the TED indicator. | |

### 3.2.6 IA Codes

There are two types of IA codes: those used to place telephone calls and those used to control the system. System control codes are preceded by a # sign. **Table 3-4** lists the IA Codes. All codes must be preceded by selecting the IA key.

***Table 3-4. Indirect Access Codes***

| Function | State | IA Code |
|---|---|---|
| *System Control Codes* | | |
| Call Forward | Active<br>Cancel<br>Status | #501<br>#502<br>#503 |
| Frequency Forward | Status<br>Terminat<br>e | #530<br>#800 |
| A/G Coupling | Select<br>Deselect<br>Status | #551<br>#552<br>#553 |
| Override | Break | #599 |
| Chime Select (frequency) | 1<br>2<br>thru<br>8 | #701<br>#702<br>thru<br>#708 |
| Clean Screen<br>Position Confidence | | #888 (TED only)*<br>#0000 |
| *Telephone and Intercom IA Codes* | | |
| Prefix to OVR Codes | | 99 |
| Trunk Group Call | 01<br>02<br>thru<br>10 | IA650<br>IA651<br>thru<br>IA659 |
| Operators | | Three-digit code i.e. 006 for position 6. |

* use this code to enter and exit clean screen mode

### 3.2.7 Jackbox

Normal positions have a single jackbox mounted on the console table that handles both A/G and G/G communications. Split positions have two jackboxes. The left-hand jackbox handles G/G communications and the right-hand jackbox handles A/G communications. In combined mode, both jackboxes handle A/G and G/G communications.

## 3.3 TURN-ON AND CHECKOUT

### 3.3.1 Introduction

The ETVS is turned on following installation and remains on.

Whenever the system is returned to operation following a power loss, or when desired, perform a position confidence test. If the test diagnostics disclose that a position is not functioning normally, notify the Supervisor.

Tests involve both the TED Positions (Local/Remote) and the Membrane Hardkey Positions (Local/Remote). Included are automated loopback tests, “AUTO LAMP” test, and touch tests.

Whenever the system is returned to operation following a power loss, or when desired, perform a position confidence test. If the test indicates that the position is not functioning normally, notify the Supervisor.

NOTE

When Maintenance Busy loopback is enabled, do not expect to use the affected position. There is no indication of Maintenance Busy at this position and proper coordination between ATC and supervisory personnel must take place.

NOTE

During diagnostics, the position will read only its own channel from the voice data bus. This allows other positions to hear the audio from the tested position; however, the tested position does not receive audio

from the active position, radios, or telephones. Therefore, the operator should not expect to use the position during the confidence test and diagnostics. Any communications established prior to start of confidence test will be resumed at the completion of the test.

NOTE

A PASS/FAIL Indicator is provided on the IA display when the test is automatic; the IA display should report PASS (if the test is successful). The PASS/FAIL indicator does not flutter or wink. No such PASS/FAIL indicator is provided for the touch tests.

NOTE

If either of the 3-second or 10-second time limits are exceeded for selecting another test or test mode, the position automatically exits from these diagnostics.

NOTE

Pressing the * key will also cause the position to exit from the diagnostics.

### 3.3.2 Position Confidence Test

NOTE

The following procedures cause the position to go off-line. Do not proceed while position is operational or without the Supervisor's permission.

#### 3.3.2.1 Set-up Procedure

NOTE

When a position is in self-test mode and someone makes an IA call to the position under test, the chime will sound. The operator at the position being tested may exit the test and answer the call as normally done, depending on the type of call. Also, if a DA key LED indicator (hardkey only) is continuously fluttering, the operator may exit the test. Two-way communication is automatically established upon exit from the test. Similarly, a TED position will automatically establish two-way communication if it is being overridden (no indication will be present during self test).

NOTE

Upon completion of each test, the indicator will show either PASS or FAIL. Following are basic checks to be made in the event of a FAIL:

- ***Position Loopback*** - Check audio path within position
- ***Subsystem Loopback*** - Check cable, Distribution Panel, and Operator Processor
- ***System Loopback*** - Check cables, Distribution Panel, Operator Processor, Timer Multiplexer Unit, Voice Data bus, and Operator Processor
- ***Secondary System Loopback*** - Repeats System Loopback for Split Channel

#### 3.3.2.2 TED Position, Local/Remote (Touch Screen Position)

Perform diagnostics to confirm proper hardware and ISDN link performance.

1. Press KEYPAD key and enter #0000 into the keypad to initiate diagnostics.
2. [NOTE: #0000 is a system command; it is not necessary to press the IA key to initiate diagnostics.]
3. The position will run four Loopback tests. The IA display should report the following indications, respectively:

*POS LPBK-PASS*
*SUBSYS LPBK-PASS*
*SYS LPBK-PASS*
*SECONDARY SUBSYS LPBK-PASS* (Split Positions only)

IA Display

| | |
|---|---|
| DIAG MODE | |
| TOUCH TEST | 08 |

3. After the Loopback tests, three (3) seconds are allowed to select another test. Proceed as follows:

a) Enter **2** into the keypad to initiate "TOUCH TEST." Lightly press your finger on the screen edge and drag about complete periphery of screen. The screen should turn red where touched.

NOTE

Be careful not to touch the keypad and/or the IA Display. If there are no breaks in the red square drawn, then the touch screen controller and all associated IR drivers are functioning normally.

b) Ten (10) seconds are allowed for selecting another test mode. Proceed to step c.

c) Enter into the following modes to test the eight (8) potentiometers on the "SPLIT POT" module. The bar in the IA display will move with knob turning [bar decreases in length for counterclockwise (CCW) knob turns and increases in length for clockwise (CW) turns].

NOTE

PR = Primary; SE = Secondary (functional at split positions only)

Enter **31** to test primary instructor sidetone "PR INST SID" (PR Instructor Side) pot

Enter **32** to test primary trainee sidetone "PR TRNE SID" (PR Trainee Side) pot

Enter **33** to test secondary instructor sidetone "SE INST SID" (SE Instructor Side) pot

Enter **34** to test secondary trainee sidetone "SE TRNE SID" (SE Trainee Side) pot

Enter **41** to test primary instructor headset "PR INST HS" (PR Instructor Headset) pot

Enter **42** to test primary trainee headset "PR TRNE HS" (PR Trainee Headset) pot

Enter **43** to test secondary instructor headset "SE INST HS" (SE Instructor Headset) pot

Enter **44** to test secondary trainee headset "SE TRNE HS" (SE Trainee Headset) pot

d) Enter **51** to test the A/G speaker. Produce a steady tone through the speaker and allow the volume to be adjusted by the speaker knob.

e) Enter **52** to test the G/G speaker (functional at split positions only). Produce a steady tone through the speaker and allow the volume to be adjusted by the speaker knob.

f) Enter ***** to exit diagnostics.

NOTE

For split TED mode ONLY, the following must be done:

1. Immediately after exiting diagnostics for TED (procedures above), enter the TED split mode by pressing split (SPLT) key twice, after ensuring that a headset or handset is plugged into split position jackbox (INSTRUCTOR or TRAINEE jack, as desired).

2. Enter #0000 into keypad to initiate diagnostics.

3. Enter 2 and perform touch test as done for non-split positions. (Important: No other confidence tests can be performed in split TED mode.)

NOTE

Characters that are bold are keyed commands; those that are not bold are displayed entities on the IA Display.

4. To exit split TED mode, press SPLT key twice. After first press, RED indicator will flash. Second press will cause SPLT indicator to go out.

For remote positions, power up Remote Rack Power Supply and repeat this procedure.

### 3.3.2.3 Membrane Hardkey Position, Local/Remote

Perform diagnostics to confirm proper hardware and ISDN link performance.

1. Enter **#0000** into the keypad to initiate diagnostics.
2. The position will run four Loopback tests. The IA display should report the following indications, respectively:

   *POS LPBK-PASS*
   *SUBSYS LPBK-PASS*
   *SYS LPBK-PASS*
   *SECONDARY SUBSYS LPBK-PASS* (Split Positions only)
3. Enter **1** to initiate “AUTO LAMP” (diagnostics mode 1, all modules should cycle all LED indicators green, then all amber, then all off).
4. Enter **2** to initiate “LAMP TOUCH” (diagnostics mode 2, see IA display in step 5).
5. Press each button three (3) times on the DA module, the Radio module, and all of the DA keys on the BOP (be careful not to touch any buttons on the keypad). The LED for that button should initially be off, then turn green with the first press, amber on the second press, and then turn off on the third press.

IA Display

| | |
|---|---|
| DIAG MODE | |
| TOUCH TEST | 08 |

6. Enter into the following modes to test the eight (8) potentiometers on the “SPLIT POT” module. The bar in the IA display will move with knob turning (bar decreases in length for CCW knob turns and increases in length for CW turns).

(SE tests functional at split positions only.)

Enter **31** to test primary instructor sidetone “PR INST SID” pot

Enter **32** to test primary trainee sidetone “PR TRNE SID” pot

Enter **33** to test secondary instructor sidetone “SE INST SID” pot

Enter **34** to test secondary trainee sidetone “SE TRNE SID” pot

Enter **41** to test primary instructor headset “PR INST HS” pot

Enter **42** to test primary trainee headset “PR TRNE HS” pot

Enter **43** to test secondary instructor headset “SE INST HS” pot

Enter **44** to test secondary trainee headset “SE TRNE HS” pot

7. Enter **51** to test the speaker (a steady tone should sound until the next step is initiated).
8. Enter **52** to test the G/G speaker (functional at split positions only). Produce a steady tone through the speaker and allow the volume to be adjusted by the speaker knob.
9. Enter ***** to exit diagnostics.

NOTE

Characters that are bold are keyed commands; those that are not bold are displayed entities on the IA Display.

For remote positions, power up Remote Rack Power Supply and repeat this procedure.”

## 3.4 OPERATING PROCEDURES

### 3.4.1 Introduction To Procedures

**Tables 3-5** through **3-15** contain operating procedures for both hardkey and TED-equipped positions. The procedures are the same for both types. The procedures are the same in normal and split modes. Refer to paragraph 3.3, Turn-On and Checkout to perform a position confidence test at the beginning of the work shift before using the position.

Observe the following conventions used in the procedure **Tables 3-5** through **3-15**.

- Text enclosed in parentheses applies to hardkey positions only
- Indications shown in RED at the TEDs are equivalent to indications shown in AMBER at the hardkey panels
- Key names are those used on the TEDs; the names are the same on the hardkeys but may have different abbreviations

- The user configures all position keys in software; therefore, specific key locations are omitted from the procedures
- Use the CA key to answer or release phone lines for which there is no DA key
- To cancel the IA or Caller ID Displays, select the CANCEL/# key twice
- The term *remote* refers to the second operator throughout these procedures

**Before using the TEDs, note the following tips:**

- **To adjust audio to the desired level, use the volume controls provided at the position.** There are controls for the trainee and instructor headset/handset, speaker volume, and chime volume. See **Figures 3-1** and **3-2**.
- **Adjust the TED screen ILLUM control at the Pot Module for comfortable viewing.**
- **To display the RADIO SUMMARY PAGE, select the RAD SUM key at the base of the A/G page.** This page displays the current operating status of all the frequencies assigned to the position.
- **To access the DTMF keypad to enter special codes, select the KEY PAD key on the extreme right of the TED.**
- **To access the DTMF keypad for placing indirect access calls, select the IA key.**
- **To cancel G/G control errors, select the REL key.**
- **To place the position in split mode, select the SPLT key. Press key twice to effect entry into mode.** In split mode, the designated TED and jackbox assume the G/G control functions and the other TED and jackbox the A/G control functions. The audio is split to the jackboxes accordingly. Normal positions do not have a SPLIT key.
- **To exit the split mode, again press SPLT key twice.** (This will return the position to combined mode.)

**Before using the hardkeys, note the following tips:**

- **To adjust audio to the desired level, use the volume controls on the BOP and Speaker Module.** There is a control for the trainee and instructor headset/handset, the speaker volume, and the chime volume.
- **Adjust key brightness for comfortable viewing using the BKGD control on the BOP panel.**

- **Adjust LED brightness for comfortable viewing using the LED control on the BOP panel.**
- **To use the DTMF keypad for placing indirect access calls, select the IA key.**
- **To cancel G/G control errors, select the REL key.**
- **To place the position in split mode, select the SPLIT key.** (Press key twice to effect entry into mode.) In split mode, the left hardkey suite and jackbox assume the G/G control functions and the right hardkey suite and jackbox, the A/G control functions. The audio is split to the jackboxes accordingly. Normal positions do not have a SPLIT key.
- **To exit the split mode, again press SPLT key twice.** (This will return the position to combined mode.)

If you are not familiar with the audio routing options available at the position, refer to **Figure 3-20** and **Table 3-5** before operating the position. They explain the audio routing options at the position and how they affect A/G and G/G communications.

**The position will not operate without a headset plugged into the jackbox.**

**At split positions, a headset must be plugged into both the A/G and G/G jackboxes to enter split mode.**

#### 3.4.1.1 Using the IA/Caller ID Displays

**IA Display Call Roster.** The software records all calls placed from the position using the IA and DTMF keys in a call roster. The operator can review the calls made using the IA Display which displays the IA code or telephone number of each call. The roster holds up to 20 calls with the most recent at the bottom of the list. There is no interaction between the roster and the operator keys except the SEL and up/down arrow keys used to review the IA Display.

**Caller ID Queue List and Status.** The queue list displays incoming IA calls. The operator can review the queue list using the Caller ID Display that displays queued calls by IA code or telephone number. The 20 most recent calls are stored in the queue; the most recent at the bottom of the queue. As with the IA Display, there is no interaction between the Caller ID Display and the operator keys.

Three symbols are used to provide status for each number included in the queue as follows:

| | |
|---|---|
| > | Indicates an unanswered incoming call |

| | |
|---|---|
| = | Indicates the call is currently in progress |
| No symbol | Indicates the call is terminated |

The Caller ID Display functions identically at the TED and hardkey positions.

### 3.4.1.2 Keying Guidelines

The system works as designed. G/G calls are broadcast over all selected frequencies; PTT calls are transmitted on frequency. The following should be noted:

- The operator jack is always “hot”; keying is only required for A/G calls
- The monitor jack requires keying to open the MIC
- The system has no way of determining whether operator is on A/G or G/G call; therefore, if operator keys from monitor jack, the audio is heard on any selected G/G and A/G circuit
- PTT (two options):
  1) Default—this option allows radio to be keyed with a G/G circuit active
  2) Keying is not allowed until any active G/G circuit is terminated

***Table 3-5. A/G and G/G Audio Routing Procedures***

*Abbreviations:* SLD = Solid, FLS = Flash, FLT = Flutter, WNK = Wink (Bracketed text = hardkey only)
GRN = Green, RED, AMB = Amber, Off = No indicator RED on TED = (AMB) on Hardkey

| Step/Action | Indication | Note |
|---|---|---|
| • **Audio Routing** [A/G and G/G] | | |
| *Using the Freq. key (HSLS):* | | |
| Select Freq. key to select headset or speaker | Left icon on Freq. key indicates routing selection for this frequency only | Right icon indicates current routing based on other position activities<br>The Freq. key only switches audio for its associated frequency |
| | (HSLS key indicates:<br>SLD AMB = Speaker<br>SLD GRN -= Headset<br>FLT AMB = Overridden by A/G or [Master] HSLS keys) | (The HSLS key only switches audio for its associated frequency)<br><br>This key is subordinate to the A/G HSLS key and the (MASTER) HSLS key |

Note: See Table 3-3 for key attribute definitions

## *Table 3-5. A/G and G/G Audio Routing Procedures (Continued)*

*Abbreviations:* SLD = Solid, FLS = Flash, FLT = Flutter, WNK = Wink (Bracketed text = hardkey only)
GRN = Green, RED, AMB = Amber, Off = No indicator RED on TED = (AMB) on Hardkey

| Step/Action | Indication | Note |
|---|---|---|
| *Using A/G HSLS:* | | |
| Select A/G HSLS key to route all A/G audio | A/G HSLS key switches all A/G audio as indicated by:<br>SLD GRN = Speaker<br><br>Off = Controlled by individual Freq. (HSLS) key | Right icon on Freq. (HSLS) key indicates current routing (see above)<br><br>A/G HSLS key takes precedence over Freq. (HSLS key selection<br><br>(HSLS key indicates FLT AMB if overridden by this key) |
| *Using the G/G HSLS:* | | |
| Select G/G HSLS key to route all G/G audio | G/G HSLS key switches all G/G audio as indicated by:<br>SLD GRN = Speaker<br>FLS GRN = Overridden<br>Off = Headset/handset | Does not affect incoming override calls<br><br>Override Example:<br>If a radio is keyed while G/G call is in progress, G/G HSLS indicator will FLS GRN |
| *Using the OVR HSLS key:* | | |
| Select OVR HSLS key to route OVR G/G calls | OVR HSLS key indicates:<br>SLD GRN = Speaker<br>Off = Headset<br>FLS GRN = Overridden by higher priority key | Subordinate to (MASTER) HSLS key |
| *Using the (MASTER) HSLS key:* | | |
| Select (MASTER) HSLS key to route all audio | (MASTER) HSLS key switches all A/G and G/G audio as indicated by:<br>SLD GRN = Speaker<br>Off = Headset/handset | Right icon on Freq. (HSLS) key indicates current routing (see above)<br><br>(All HSLS keys indicate:<br>FLT AMB = Headset/handset)<br><br>(HSLS key indicates SLD AMB if speaker is selected at that radio)<br><br>This key takes precedence over the Freq. (HSLS), A/G HSLS, and G/G HSLS key selections and OVR HSLS |

Note: See Table 3-3 for key attribute definitions

### *Table 3-5. A/G and G/G Audio Routing Procedures (Continued)*

*Abbreviations:* SLD = Solid, FLS = Flash, FLT = Flutter, WNK = Wink (Bracketed text = hardkey only)
GRN = Green, RED, AMB = Amber, Off = No indicator RED on TED = (AMB) on Hardkey

| Step/Action | Indication | Note |
|---|---|---|
| *Unattended Position Audio Routing*: | | |
| | | With all headset/handset removed from the position jackbox(s), audio is routed almost immediately to the speaker.<br><br>If headset/handsets are removed for over 30 seconds, all G/G connections “hang” up<br><br>Within 30 seconds, reconfiguration maps are automatically accepted by the position from the SCT |

Note: See Table 3-3 for key attribute definitions

### *Table 3-6. Radio Operating Procedures*

*Abbreviations:* SLD = Solid, FLS = Flash, FLT = Flutter, WNK = Wink (Bracketed text = hardkey only)
GRN = Green, RED, AMB = Amber, Off = No indicator RED on TED = (AMB) on Hardkey

| Step/Action | Indication | Note |
|---|---|---|
| • **Transmit** | | |
| 1. Select TX SEL in desired frequency keyset (use the PAGE key if necessary) | TX SEL indicates *SLD GRN* If *FLS* or *FLT RED (AMB)*, frequency is in use | More than one position can access a TX simultaneously |
| 2. Select and hold PTT switch on the handset or headset, or use the footswitch to communicate | TX SEL indicates *FLT GRN*, at other positions a *RED (AMB)* indication | PTT priority goes to first position to key<br><br>G/G audio is routed to speaker during transmission |
| 3. Select TX SEL to release the transmitter | TX SEL, *Off* | |
| • **Monitor a Receiver** | | |
| 1. Select RX SEL in desired frequency keyset (use the PAGE key if necessary) | RX SEL indicates *SLD GRN* or, if VOX present, *FLT GRN* | The receiver must be selected to hear receive audio<br><br>Use (MASTER) HSLS, A/G HSLS, or FREQ (HSLS) key to route audio to the headset, handset or speaker (refer to audio routing in **Table 3-5**) |

Note: See Table 3-3 for key attribute definitions

## *Table 3-6. Radio Operating Procedures (Continued)*

*Abbreviations:* SLD = Solid, FLS = Flash, FLT = Flutter, WNK = Wink (Bracketed text = hardkey only)
GRN = Green, RED, AMB = Amber, Off = No indicator RED on TED = (AMB) on Hardkey

| Step/Action | Indication | Note |
|---|---|---|
| 2. Select RX SEL to release the receiver | RX SEL indicates *Off* or, if VOX present, *FLS GRN* | More than one position can access an RX frequency simultaneously |
| • **Select Main/Standby Radios** | | |
| 1. Select TX MAIN or RX MAIN to switch to standby TX or RX | Key name changes to TX or RX STNBY (*SLD GRN* or *SLD AMB*) | Indication changes at all positions that have the same frequency assigned |
| 2. Select again to return to MAIN TX or RX | Key name changes to TX or RX MAIN (*SLD AMB* to *SLD GRN*) | |
| • **Add or Delete a Frequency** | | On TED display only, pressing OK will complete, and add or delete, but not exit, the Frequency Add/Delete mode. Other frequencies can still be added or deleted without exiting the mode. (Simply select another frequency to be added or deleted, then press OK.) When ready to exit, perform step 2. |
| 1. Select FREQ A/D key<br> <br> | Frequency add/delete dialogue box replaces the G/G pages on the TED (Caller ID Display activated at hardkey positions) | 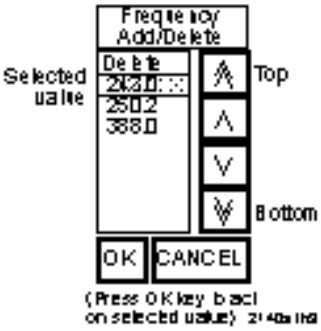 <br> |
| 2. At TED position only, to exit Frequency Add/Delete mode, press the <CANCEL> key. | | |
| • **Hardkey Caller ID Display** | | |
| 1. Select DELETE or one of the frequencies in the FREQ A/D menu using the arrow keys | The selected menu item is highlighted (displayed) | Selecting a frequency assumes the ADD mode. The selected frequency will be made available at the position |
| 2. Select a vacant OR existing frequency by pressing any key in a radio key set | The frequency key is highlighted<br>(An arrow appears in the selected freq window) | On the summary page, the Freq. key is highlighted; on A/G pages 1-4, its associated keys are also highlighted |

Note: See Table 3-3 for key attribute definitions

### *Table 3-6. Radio Operating Procedures (Continued)*

*Abbreviations:* SLD = Solid, FLS = Flash, FLT = Flutter, WNK = Wink (Bracketed text = hardkey only)
GRN = Green, RED, AMB = Amber, Off = No indicator RED on TED = (AMB) on Hardkey

| Step/Action | Indication | Note |
|---|---|---|
| 3. Select OK in the dialogue box (on DTMF keypad) | Selected freq. key displays change<br><br>The dialogue box closes (Caller ID clears) | The selected frequency is added to a vacant freq. key (window) OR the previously assigned frequency is deleted from the freq. key (window) |
| • **Forward Frequencies** | | |
| 1. Select FREQ FWD key on Special Function page | FREQ FWD *indicates FLS GRN* and the DTMF keypad is displayed | To terminate before remote operator responds. select FREQ FWD again |
| 2. Enter a position number using DTMF keypad | FREQ FWD indicates *FLS GRN* at local and remote position and fast chime at remote position | Use 3-digit position codes<br>• EXAMPLE—006 (for position 6)<br><br>Calls may be made during operation |
| 3. Remote operator touches flashing FREQ FWD key to accept frequencies | FREQ FWD indicates *SLD GRN* at local position and *FLT GRN* at remote | This function forwards all frequencies at the local position unless they are already assigned to the remote position |
| • **Cancel Frequency Forward** [at the remote position] | | |
| 1. Select KEY PAD key to access DTMF keypad | DTMF keypad is displayed | (DTMF keypad is always accessible at hardkey position) |
| 2. Remote operator enters #800 on DTMF keypad to complete cancellation when ready | Frequencies are deleted from remote TED A/G pages (frequency windows) | |
| • **Make an Emergency Transmission** [all emergency frequencies] | | |
| 1. Select and hold the ERAD PTT key in the G/G pages | TX SEL indicates *FLT GRN* for all emergency frequencies assigned to the position<br><br>G/G audio routed to speaker G/G HSLS key indicates *FLS GRN* during radio key | TX SEL at all positions with emergency frequencies, *FLS RED (AMB)*<br><br>There can be more than one emergency frequency configured on the ERAD PTT key |
| 2. Release EPTT to end transmission | ERAD TX and TX SEL, *Off* | TX SEL indications *Off* at all positions; all emergency frequencies |

| | | |
|---|---|---|
| | | |

Note: See Table 3-3 for key attribute definitions

### *Table 3-6. Radio Operating Procedures (Continued)*

*Abbreviations:* SLD = Solid, FLS = Flash, FLT = Flutter, WNK = Wink (Bracketed text = hardkey only)
GRN = Green, RED, AMB = Amber, Off = No indicator RED on TED = (AMB) on Hardkey

| Step/Action | Indication | Note |
|---|---|---|
| • **Make an Emergency Transmission** [single frequency] | | |
| 1. Select TX SEL configured for an emergency freq. | TX SEL key indicates FLT GRN while selected | Transmission occurs immediately and terminates when key is released |
| • **Couple A/G Frequencies to a G/G Line** | | |
| With G/G call in progress, via IP or IC (including a conference), and a radio RX currently selected | | |
| 1. Select the A/G CPL key | A/G CPL indicates *SLD GRN* | The G/G party can hear the communications on the A/G frequency |
| 2. Select the A/G CPL key to terminate the coupling | A/G CPL indicates Off | |
| If there is no A/G CPL key, use the DTMF keypad to:<br>Enter code #551 to couple<br>Enter code #552 to terminate<br>Enter code #553 to get status | | IA Display shows status |

Note: See Table 3-3 for key attribute definitions

### *Table 3-7. Interphone Operating Procedures*

*Abbreviations:* SLD = Solid, FLS = Flash, FLT = Flutter, WNK = Wink (Bracketed text = hardkey only)
GRN = Green, RED, AMB = Amber, Off = No indicator RED on TED = (AMB) on Hardkey

| Step/Action | Indication | Note |
|---|---|---|
| • **Access a Line Using the DA Key** | | |
| 1. Select the DA key designated for the trunk line | | If the key already indicates SLD RED (AMB), the operator may select the busy line and join the conversation (if the line is not classmarked private) |
| A PBX line indicates | FLT GRN and the DTMF keypad is displayed<br>Dial tone is heard in headset | |
| An ASU line indicates | SLD GRN<br>Operator hears ringback in headset | |

Note: See Table 3-3 for key attribute definitions

## *Table 3-7. Interphone Operating Procedures (Continued)*

*Abbreviations:* SLD = Solid, FLS = Flash, FLT = Flutter, WNK = Wink (Bracketed text = hardkey only)
GRN = Green, RED, AMB = Amber, Off = No indicator RED on TED = (AMB) on Hardkey

| Step/Action | Indication | Note |
|---|---|---|
| An SS-1 line indicates | FLT GRN | |
| An E&M line indicates | *SLD GRN*<br>Operator hears ringback in headset | E&M dial line indicates *FLT GRN* |
| • **Access a Line Using the IA Key** | | |
| 1. Select the IA key | IA key indicates *SLD GRN*<br>DTMF keypad is displayed | Local operator hears dial tone in headset |
| 2. Enter 3-digit code for the trunk line | Number appears in IA Display<br><br>IA key indicates *FLT GRN* when remote end answers | Operator hears DTMF tones in headset |
| • **Place a Speed Dial Call** | | |
| 1. Select the appropriate speed dial DA key | DA or IA key for associated line indicates *FLT GRN* | The supervisor can configure up to 200 speed dial DA keys |
| Communication starts when distant end answers the call | | The DA key configured for speed dial at the SCT does not provide indications; the DA key for the associated line or the IA key provides the indication |
| **Place an Auto Ring Call** | | |
| 1. Access the auto ring line using the DA or IA method | The remote phone rings automatically<br>Local operator hears ringback indication in the headset | |
| Two-way communication starts when the distant end answers | DA or IA key indicates *FLT GRN* | |
| • **Place a Manual Ring Call** | | |
| 1. Access the manual ring line using the DA or IA method | | |

| | | |
|---|---|---|
| 2. Select the MAN RING key and release to end ring signal | The remote phone rings while ring signal is present | Local operator hears ringback indication in the headset |

Note: See Table 3-3 for key attribute definitions

### *Table 3-7. Interphone Operating Procedures (Continued)*

*Abbreviations:* SLD = Solid, FLS = Flash, FLT = Flutter, WNK = Wink (Bracketed text = hardkey only)
GRN = Green, RED, AMB = Amber, Off = No indicator RED on TED = (AMB) on Hardkey

| Step/Action | Indication | Note |
|---|---|---|
| Two-way communication starts when the distant end answers | DA or IA key indicates *FLT GRN* | |
| • **Place a Voice Call** | | |
| 1. Access the voice call line using the DA or IA method | | |
| 2. Commence communication | DA or IA key indicates *FLT GRN* | Distant end hears operator's voice |
| • **Release a Call** | | |
| To release connection, select REL key, or DA key for active line again | Key indicates OFF<br>Active call indication is removed from IA Display | The connection is also released if another intercom or telephone line is selected |
| • **Answer an Incoming Call** | | |
| Select *FLS GRN* DA or CA key and commence communications | Incoming call indicated by FLS GRN DA key or CA key and audible chime<br><br>**If the call is a voice call, caller's voice is heard on position speaker instead of chime**<br><br>DA or CA key indicates *FLT GRN* | Chimes can be muted using the speaker chime level control<br><br>DA keys indicate incoming **non-selective** calls at all positions with a DA key for the line<br><br>DA or CA keys indicate incoming **selective** calls only at the called position |

Note: See Table 3-3 for key attribute definitions

## *Table 3-7. Interphone Operating Procedures (Continued)*

*Abbreviations:* SLD = Solid, FLS = Flash, FLT = Flutter, WNK = Wink (Bracketed text = hardkey only)
GRN = Green, RED, AMB = Amber, Off = No indicator RED on TED = (AMB) on Hardkey

| Step/Action | Indication | Note |
|---|---|---|
| • **Place a Call on Hold** | | |
| Select HOLD | DA, IA, or CA keys indicate *WNK RED (AMB)*<br><br>If it is an IA call, the IA key *WNK RED (AMB)* at the initiating position<br><br>CA key indicates *WNK RED (AMB)* if the call was answered using the CA key | You must have a CONF key configured at your position to put a conference on hold. |
| • **Release a Call on Hold** | | If any operator access the line, it removes the device from HOLD |
| Select *WNK* DA, IA, or CA key | Selected key indicates *FLT GRN* | IA and CA keys only control this operation at the initiating position |
| • **Place a Call on a Dial-up Line** | | |
| 1. Access the dial up line using the DA or IA method | | |
| 2. Dial the desired number using the DTMF keypad | DTMF tones present in local operator's headset<br><br>Ringback present during line ring<br><br>Digits entered appear in IA Display | Provided it is not a pulse dial line<br><br>If external circuit provides ringback |
| Communication starts when remote party answers | Ring back ceases | Select DA key to return to G/G pages |

Note: See Table 3-3 for key attribute definitions

### *Table 3-7. Interphone Operating Procedures (Continued)*

*Abbreviations:* SLD = Solid, FLS = Flash, FLT = Flutter, WNK = Wink (Bracketed text = hardkey only)
GRN = Green, RED, AMB = Amber, Off = No indicator RED on TED = (AMB) on Hardkey

| Step/Action | Indication | Note |
|---|---|---|
| • **Make a Public Address Announcement** | | |
| 1. Access the public address line using the DA or IA method | | |
| 2. Make the announcement | Operator's voice heard at public address speakers | |
| • **Place an SS-1 Call** | | |
| 1. Access the SS-1 line using the DA or IA method | | |
| 2. Dial 2- or 3-digit code of destination operator using the DTMF keypad | Tweedle tones audible at local position speaker<br><br>Digits are displayed in IA Display | Local operator hears FSK signals in speaker |
| Communication starts when distant operator answers | | |

Note: See Table 3-3 for key attribute definitions

### *Table 3-8. Basic Intercom Operating Procedures*

*Abbreviations:* SLD = Solid, FLS = Flash, FLT = Flutter, WNK = Wink (Bracketed text = hardkey only)
GRN = Green, RED, AMB = Amber, Off = No indicator RED on TED = (AMB) on Hardkey

| Step/Action | Indication | Note |
|---|---|---|
| • **Place a DA Intercom Call** | | |
| To access the line, select the appropriate DA key | DA key indicates *SLD GRN*<br>Chimes sound at called position<br><br>Caller hears ringback | If key already indicates *SLD RED (AMB),* line is in use—operator may select busy line and join the conversation |
| Communication starts when remote operator answers | DA key indicates *FLT GRN* | |

Note: See Table 3-3 for key attribute definitions

## *Table 3-8. Basic Intercom Operating Procedures (Continued)*

*Abbreviations:* SLD = Solid, FLS = Flash, FLT = Flutter, WNK = Wink (Bracketed text = hardkey only)
GRN = Green, RED, AMB = Amber, Off = No indicator RED on TED = (AMB) on Hardkey

| Step/Action | Indication | Note |
|---|---|---|
| • **Place an IA Intercom Call** | | |
| 1. Select the IA key | IA key indicates SLD GRN<br>DTMF keypad is displayed | Dial tone heard in operator headset until operator enters first digit |
| 2. Dial 3-digit code | Number appears in IA Display<br><br>Caller hears DTMF tones in headset<br><br>Caller hears distant end ringback tone<br><br>Caller hears invalid tone if code is invalid | Refer to site documentation for the IA dial codes available at your location<br>• EXAMPLE—006 (for position 6)<br>The IA key is also used for accessing special functions, refer to **Table 3-4** |
| • **Answer an Intercom Call** | | |
| | Incoming call indicated by *FLS GRN* DA or CA key and audible chime | Chimes can be muted using the speaker Chime Level control |
| Select DA or CA key and commence communication | DA or CA key indicates *FLT GRN* | Answering operator is disconnected from all calls except those on HOLD or on incoming OVR (override) |

Note: See Table 3-3 for key attribute definitions

## *Table 3-9. Intercom Override Operating Procedures*

*Abbreviations:* SLD = Solid, FLS = Flash, FLT = Flutter, WNK = Wink (Bracketed text = hardkey only)
GRN = Green, RED, AMB = Amber, Off = No indicator RED on TED = (AMB) on Hardkey

| Step/Action | Indication | Note |
|---|---|---|
| • **Place an Override DA Call** | | |
| Select DA key with override feature assigned | DA key indicates *FLT GRN*, OVR indicates *FLT GRN* and overridden operator hears zip tone | Operator is disconnected from all calls except those on HOLD or incoming OVR (override) |
| Commence communication | | Local operator's voice is heard in remote operator's headset—All G/G parties currently in communication can speak and hear all others; however, override audio is not transmitted over overridden operator's radio |
| • **Place an Override IA Call** | | |
| 1. Select the IA key | IA key indicates *SLD GRN* DTMF keypad is displayed | Dial tone heard in operator headset until operator enters first digit |
| 2. Dial 99 prefix followed by 3-digit code | Number appears in IA Display<br>Caller hears DTMF tones in headset | Refer to site documentation for the IA dial codes available at your location<br>• EXAMPLE—99 006 (for position 6)<br>The IA key is also used for accessing special functions, refer to **Table 3-4** |
| | Caller and called hear zip tone | If there is a DA key for the remote position, it provides the indications |
| | Caller hears invalid tone if code is invalid | |
| Commence communication | | Local operator's voice is heard in remote operator's headset or speaker |
| • **Release DA & IA Calls** | | |
| *Non-override Calls:*<br>To release the line, select the REL, CA, or DA key | DA or CA key indicates *Off* | The connection is also released if another intercom or telephone line is selected |

Note: See Table 3-3 for key attribute definitions

### *Table 3-9. Intercom Override Operating Procedures (Continued)*

*Abbreviations:* SLD = Solid, FLS = Flash, FLT = Flutter, WNK = Wink (Bracketed text = hardkey only)
GRN = Green, RED, AMB = Amber, Off = No indicator RED on TED = (AMB) on Hardkey

| Step/Action | Indication | Note |
|---|---|---|
| *Calling Operator OVR:* To release, select the REL or DA key | DA or CA key indicates *Off* | |
| *Called Operator OVR:* Select IA key and OVR break code #599 using DTMF keys | DA or CA key indicates *Off* | Provided this classmark is configured |

Note: See Table 3-3 for key attribute definitions

### *Table 3-10. Conference Call Operating Procedures*

*Abbreviations:* SLD = Solid, FLS = Flash, FLT = Flutter, WNK = Wink (Bracketed text = hardkey only)
GRN = Green, RED, AMB = Amber, Off = No indicator RED on TED = (AMB) on Hardkey

| Step/Action | Indication | Note |
|---|---|---|
| **Place a Conference Call Using the DA or IA Keys** | | |
| 1. Access the conference line by touching the CONF key | CONF key illuminates *SLD GRN* | You can only initiate a conference set-up by using the CONF key, or use the PRE CON key if initiating a preset conference and omit step 2 |
| 2. Add members to the conference by placing intercom calls to each member in turn using the DA or IA method | | An operator position can be a member of only one conference at time including a conference on hold. The conference originator can add and remove parties as needed. |
| • **Answer Conference Calls** | | |
| | Incoming call indicated by *FLS GRN* CONF key and DA or CA key plus audible chime | Chimes can be muted using the speaker Chime Level control |
| Select DA or CA key and commence communication (you cannot use the CONF key to answer a conference call) | CONF key and DA or CA key indicate *FLT GRN* | Answering operator is disconnected from all calls except those on HOLD or OVR (override) |
| | | Override calls override the conference<br>Retrieving a call on HOLD cancels operator's conference participation |

Note: See Table 3-3 for key attribute definitions

### *Table 3-10. Conference Call Operating Procedures (Continued)*

*Abbreviations:* SLD = Solid, FLS = Flash, FLT = Flutter, WNK = Wink (Bracketed text = hardkey only)
GRN = Green, RED, AMB = Amber, Off = No indicator RED on TED = (AMB) on Hardkey

| Step/Action | Indication | Note |
|---|---|---|
| • **Release Conference Calls** | | |
| *Conference Originator* | | |
| Select the desired DA key to release an individual connection | Selected DA key indicates *Off* | Terminates communication with the selected party only—the rest of the conference is still intact |
| To remove a conference member using IA key: | Dial tone is heard | Terminates communication with the selected party only—the rest of the conference is still intact |
| Press IA key and enter the IA code for the conference member to be removed | Selected position is removed from conference | |
| Select the REL key to release all parties to the conference | All DA and CONF keys indicate *Off* | The conference is terminated at all positions |
| *Called Parties* | | |
| Select the REL or CONF key to drop from a conference | All keys associated with the conference indicate *Off* | Other conference parties are not affected |

Note: See Table 3-3 for key attribute definitions

### *Table 3-11. Call Forward Operating Procedures*

*Abbreviations:* SLD = Solid, FLS = Flash, FLT = Flutter, WNK = Wink (Bracketed text = hardkey only)
GRN = Green, RED, AMB = Amber, Off = No indicator RED on TED = (AMB) on Hardkey

| Step/Action | Indication | Note |
|---|---|---|
| • **Forward All Calls Using Call Forward Key** | | |
| 1. Select the CALL FWD key | CALL FWD key indicates *FLS GRN*<br>DTMF keypad is displayed | (DTMF keypad always available at hardkey positions) |
| 2. Dial 3-digit code of position to receive forwarded calls | Number appears in IA Display | Refer to site documentation for the IA dial codes available at your location |
| | DTMF keypad closes<br>CA key *FLS RED* | System forwards all calls to desired position |

Note: See Table 3-3 for key attribute definitions

## *Table 3-11. Call Forward Operating Procedures (Continued)*

*Abbreviations:* SLD = Solid, FLS = Flash, FLT = Flutter, WNK = Wink (Bracketed text = hardkey only)
GRN = Green, RED, AMB = Amber, Off = No indicator RED on TED = (AMB) on Hardkey

| Step/Action | Indication | Note |
|---|---|---|
| • **Forward All Calls Using DTMF Keypad** | | |
| 1. Select the KEY PAD key | DTMF keypad is displayed | (DTMF keypad always available at hardkey positions) |
| 2. Dial #501 | Entry appears in IA Display | Call forward is initiated |
| 3. Dial 3-digit code of position to receive forwarded calls | Number appears in IA Display | Refer to site documentation for the IA dial codes available at your location |
| | CA key indicates *FLS RED (AMB)* | System forwards all calls to the desired position |
| | | Call forwards can be "daisy-chained." You can chain up to 10 positions. |
| • **Verify Position Call Forward Status** | | |
| 1. Select the KEY PAD key | DTMF keypad is displayed | (DTMF keypad always available at hardkey positions) |
| 2. Dial #503 | Entry appears in IA Display, then call forward status is displayed | Typical messages: <TCN 08 CF is FREE> or <TCN 08 CF to TCN 03> |
| • **Cancel Call Forward** [at forwarded position] | | |
| | | Forwarding operator can still call out |
| | | Only the position initiating the call can cancel the call forward setup |
| 1. Select the KEY PAD key | DTMF keypad is displayed | (DTMF keypad always available at hardkey positions) |
| 2. Dial #502 | Entry appears in IA Display | Call forward is canceled |

Note: See Table 3-3 for key attribute definitions

## *Table 3-12. Position Monitor Mode Operating Procedures*

*Abbreviations:* SLD = Solid, FLS = Flash, FLT = Flutter, WNK = Wink (Bracketed text = hardkey only)
GRN = Green, RED, AMB = Amber, Off = No indicator RED on TED = (AMB) on Hardkey

| Step/Action | Indication | Note |
|---|---|---|
| • **Monitor a Position Using DA** [radio, telephone, and intercom] | | |
| Select the DA (monitor) key for the position to be monitored | DA key indicates *FLT GRN* | In position monitor mode, **all** audio activity at the position selected for monitoring is audible at the selecting position<br>This is different from radio monitor mode, which only permits monitoring of radio audio activity<br>At least three other positions can be monitored |
| To deselect or terminate DA (monitor) mode, select DA (monitor) key again or select the REL key | DA key indicates off. | . |
| • **Monitor a Position Using IA** | | Monitored audio will be placed on hold upon placement or reception of A/G or G/G calls. The ETVS provides a position classmark to enable or inhibit the “monitor on hold” (MOH) feature capability for incoming override calls. When override MOH call is enabled, the monitored function is placed on hold for all incoming calls. When override MOH is inhibited, the operator will hear both the monitored audio and the incoming override audio. |
| 1. Select the IA MON key | IA MON key indicates *SLD GRN* | |
| 2. Select the IA key<br>NOTE<br>To select a position to monitor, press the IA key + 3 digits (see step 3). To deselect a position for monitoring (i.e., a position previously selected) press IA key + 3 digits (code for position to be deselected). | IA key indicates *SLD GRN*<br>DTMF keypad is displayed | |

### *Table 3-12. Position Monitor Mode Operating Procedures (Continued)*

*Abbreviations:* SLD = Solid, FLS = Flash, FLT = Flutter, WNK = Wink (Bracketed text = hardkey only)
GRN = Green, RED, AMB = Amber, Off = No indicator RED on TED = (AMB) on Hardkey

| Step/Action | Indication | Note |
|---|---|---|
| 3. Dial 3-digit code for the position to be monitored | Originator can hear all audio activity at the position being monitored | Refer to site documentation for the IA dial codes available at your location<br>•EXAMPLE -006 (for position 6)<br>The IA key is also used for accessing special functions, refer to **Table 3-4**<br>Repeat steps 2 and 3 to add positions |
| 4. Select IA MON when finished | IA MON key indicates *FLT GRN* | Operator may use position as normal with monitoring active |
| 5. Select IA MON key to edit position monitoring setup | IA MON key indicates *FLT GRN* | Repeat steps 2 and 3 to delete or add positions |
| To terminate the IA monitor mode, select the REL key. | | |

Note: See Table 3-3 for key attribute definitions

### *Table 3-13. Position Reconfiguration Procedure*

*Abbreviations:* SLD = Solid, FLS = Flash, FLT = Flutter, WNK = Wink (Bracketed text = hardkey only)
GRN = Green, RED, AMB = Amber, Off = No indicator RED on TED = (AMB) on Hardkey

| Step/Action | Indication | Note |
|---|---|---|
| • **Reconfigure the Position** | | |
| | The RCN ENBL key indicates *FLS GRN* and a single chime | A new map must be downloaded from the SCT by the Supervisor before the RCN ENBL key illuminates and a single chime is heard |
| Select the RCN ENBL key to load the new map to the position | Chimes are heard, wait a few seconds for the process to finish | RCN ENBL must be selected to accept the new map<br>The SCT maintains a reconfigured status, by position, on all maps sent out |

Note: See Table 3-3 for key attribute definitions

### *Table 3-14. Instructor/Trainee Intercom [Brief] Procedure*

*Abbreviations:* SLD = Solid, FLS = Flash, FLT = Flutter, WNK = Wink (Bracketed text = hardkey only)
GRN = Green, RED, AMB = Amber, Off = No indicator RED on TED = (AMB) on Hardkey

| Step/Action | Indication | Note |
|---|---|---|
| • **Brief** [combined or A/G split mode] | | |
| Select the BRF key and commence communication between A/G operators | The BRF key indicates *FLT GRN* | Available at normal and split positions in combined or split modes |
| | *(WNK RED (AMB*) with PTT active) | Activating PTT blocks communication with the other operator; however, the other operator can hear the radio communication |
| To discontinue (cancel) Brief, again select the BRF key. | | |
| • **Split Brief** [G/G split mode only] | | |
| Select the G/G BRF key and commence communication between G/G operators | The G/G BRF key indicates *FLT GRN* | Available at split positions in split mode |

Note: See Table 3-3 for key attribute definitions

***Table 3-15. Split Mode Operation***

*Abbreviations:* SLD = Solid, FLS = Flash, FLT = Flutter, WNK = Wink (Bracketed text = hardkey only)
GRN = Green, RED, AMB = Amber, Off = No indicator RED on TED = (AMB) on Hardkey

| Step/Action | Indication | Note |
|---|---|---|
| • **Split Mode** [TED or Hardkey] | | |
| To initiate the mode:<br>Select the SPLT key;<br>press twice | | Ensure either headset or handset is plugged into split-position jackbox in either INSTRUCTOR or TRAINEE jack before pressing key |
| | First entry causes indicator to FLS GRN.<br>Second entry causes indicator to indicate steady GRN. | |
| To exit split mode:<br>Press SPLT key twice. | First entry causes indicator to FLS RED (or AMB on Hardkey).<br>Second entry causes indicator to go out. | |

Note: See Table 3-3 for key attribute definitions

## 3.5 CENTRAL RACK MAINTENANCE POSITION EQUIPMENT

The central rack contains a single jackbox position for maintenance use that consists of the same basic equipment (TED or hardkey) as a normal operator position as follows:

| TED | Hardkey |
|---|---|
| • TED LCD (TRACON) | • IBOP |
| • Jackbox | • Jackbox |
| • Speaker Module | • Radio Selector |
| • POT Assembly | • IA Module |
| • Card File | • Speaker Module |

The TED maintenance position equipment listed above functions identically to a normal operator position and is configured at the SCT. It is illustrated in **Figure 3-21.** For hardkey maintenance position configuration and equipment, refer to **Figure A-22.**

The maintenance position receives power via the System Alarm Panel.

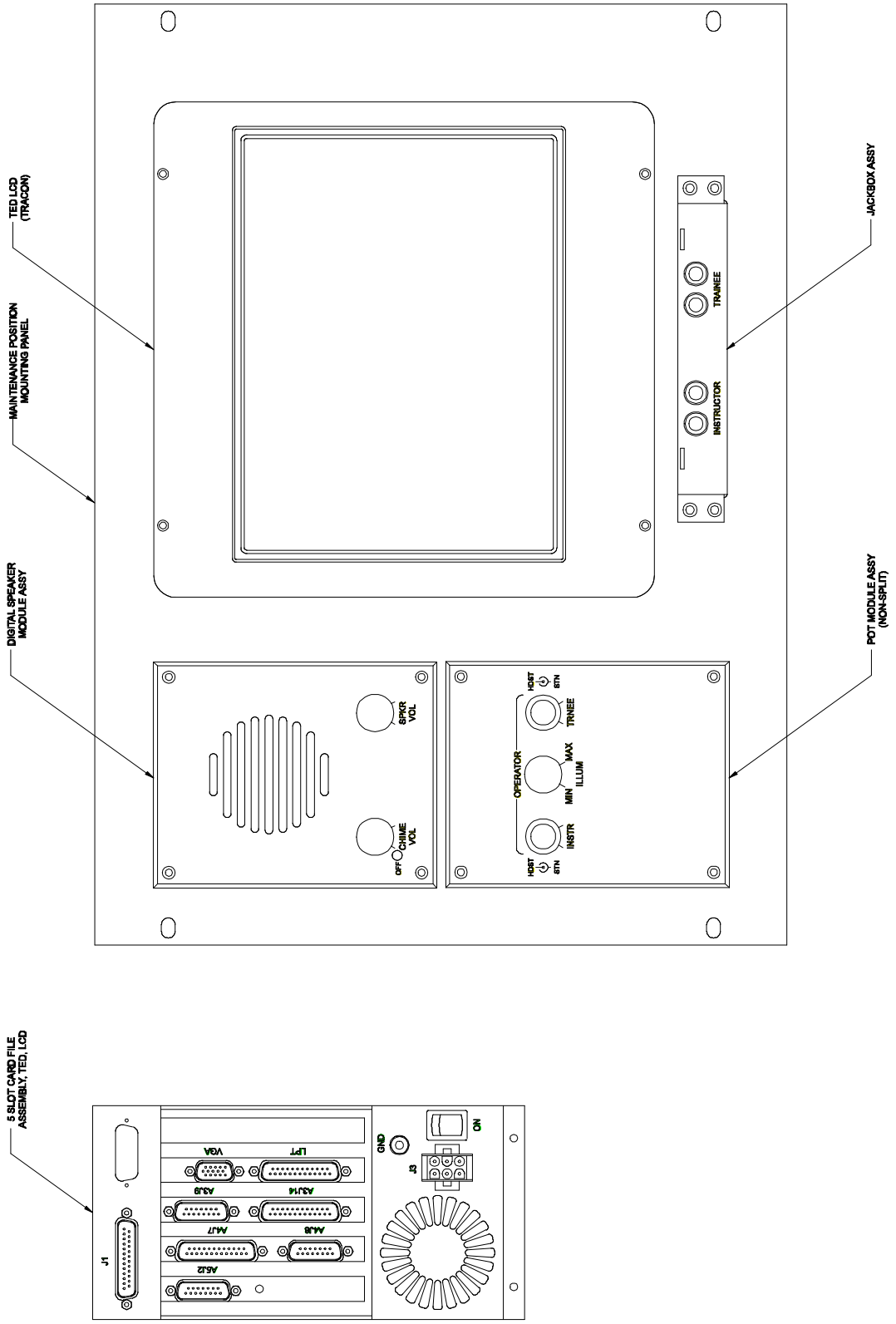


*Figure 3-21. Maintenance Position Assembly, TRACON TED*

In addition to the above equipment the position also includes:

- Maintenance Speaker Panel

The Maintenance Speaker Panel has an input jack, power amplifier, and speaker with volume control. It receives power via the System Alarm Panel.

***Maintenance Access Patching.*** Using a patch cord with standard telephone tip and ring jacks, the technician can patch the audio output configured at the front panel jacks of the Maintenance Access Unit, or any other processor or interface card, to the input jack on the speaker panel.

***Signal Path Diagnostics.*** The SCT Diagnostics procedure allows the technician to configure a selected position for a loopback audio test. The position and the specific loopback point in the position electronics is established in the SCT setup. When the test is activated, a tone, generated at the maintenance position, is sent to the selected position and looped back to the maintenance position headset or speaker. If the tone is present, the selected signal paths are functioning correctly. The loopback function must be set up at the SCT using the Diagnostics screen and can only be made through a position placed in the MAINTENANCE BUSY mode by the supervisor.

***Maintenance Monitoring.*** Maintenance monitoring permits maintenance personnel to monitor the legal record audio of a selected position at the maintenance position headset or speaker. It also sends the selected position record audio to the Maintenance Access Unit front panel jacks. The maintenance monitoring function must be set up at the SCT using the Diagnostics screen and can only be from a position placed in the MAINTENANCE BUSY mode by the supervisor.

Refer to Section 6 for the procedures to set up the signal path diagnostics test and maintenance monitoring of position audio.

## 3.6 SUPERVISORY RECORDER OPERATION

### 3.6.1 Recorder Set-Up for Operation

See installation details in Section 6, paragraph 6.5.15.2, step 3d. The Supervisory Recording dialog box at the SCT allows the supervisor to record on demand all incoming and outgoing calls to any position selectively.

NOTE

A Supervisory Record Processor card (a non-split position Operator Processor Card using different firmware) interfaces the Supervisory Record Interface Unit with the central rack equipment. Using the SCT, the Supervisor can program the card to route any two position record channels on the voice data bus to the Supervisory Record Interface Unit. Each interface unit can have two recorders connected to it; each recorder can receive and record audio via the interface unit.

### 3.6.2 Recorder Operation

1. The Supervisor, via step-by-step procedures in the SCT Users' Guide, programs what position he intends to record and the recorder(s) to be used (i.e., Recorder 1 and /or 2).

NOTE

The Supervisor selects position(s) to be recorded from a “Positions selection” list). See SCT Users Guide for complete procedure.

2. The Supervisor then presses the RECORD button on the recorder.
3. The Supervisor Record CCA processor receives the message from the SCT as to position(s) selected.
4. When the position to be recorded sends or receives a call, the Supervisory Record CCA processor enables the audio from the position to go to the Supervisory Record Interface.
5. VOX circuitry in the Supervisory Record Interface detects the audio and sends a signal through the Remote (REM) line into the Recorder which starts recording.
6. When the audio has stopped (position no longer on line) the VOX detect circuitry in the Supervisory Record Interface sends message via remote line which stops the Recorder. The recorder may also be stopped by pressing the STOP EJECT button on the unit.

NOTE

The Remote plug must be removed from the REM jack on the recorder in order to rewind the tape, to play what was recorded, or to fast-forward the tape. The STOP EJECT or the PAUSE (temporary stop) buttons can be pressed without unplugging the Remote plug.

NOTE

Playback of the audio can be heard at the recorder itself via the built-in speaker (volume adjustable) or through an earphone, supplied with the recorder, plugged into the EAR jack with a plug for private listening. (Connecting the earphone automatically disconnects the built-in speaker.)

7. If the Supervisor wants to take just a sampling of the conversation, he must send a message to the appropriate Supervisory Record CCA (e.g., RCRD 1, 2, or 3) to stop the audio to the Supervisory Record Interface. The VOX circuitry in the Supervisory Record Interface detects the absence of audio and sends a message to the recorder via the remote line to stop recording."

*This page intentionally blank.*

# SECTION 4.

# FUNCTIONAL DESCRIPTION

## 4.1 INTRODUCTION TO THE ETVS

Section 4, paragraph 4.1 describes the basic ETVS system architecture, the multiplexing scheme, communications buses, and card cages. Paragraph 4.2 describes the five basic systems available for ETVS and the subsystems associated with them.

The ETVS is a communications switching system that features radio, telephone and intercom communications. The system comprises central equipment, position equipment, and configuration terminals. The basic architecture of the system is shown in **Figure 4-1.**

For ease of reference and discussion, the system is broken down into equipment groups, each related to a particular system interface. They are defined in the figure as the Device 1 (device is used as a generic term to refer to radio, telephone or some other type of system interface), Device 2, Operator, Muxing, and Configuration and Control equipment groups. The equipment groups consist of both central rack equipment and units remote to the central rack. The number of equipment groups in a system depends on the number of different device types the system supports.

The equipment groups are further broken down into functional groups. There are five functional groups common to all the equipment groups, except the Configuration and Control group: they are the peripheral, distribution, interface, conferencing, and muxing groups. These functional groups are defined down the extreme right of the diagram. The configuration and control equipment group includes control and interface equipment. The diagram has been simplified to show multiple units of the same type in each equipment group only once.

The configuration and control equipment is, with the exception of the Gateway computer and Gateway Interface, all remote to the central equipment rack. It is interfaced with the central rack via the Gateway Interface. All peripheral equipment is interconnected with the central rack via the distribution panels. Distribution, interface, conferencing, and muxing equipment are all located in the central rack.

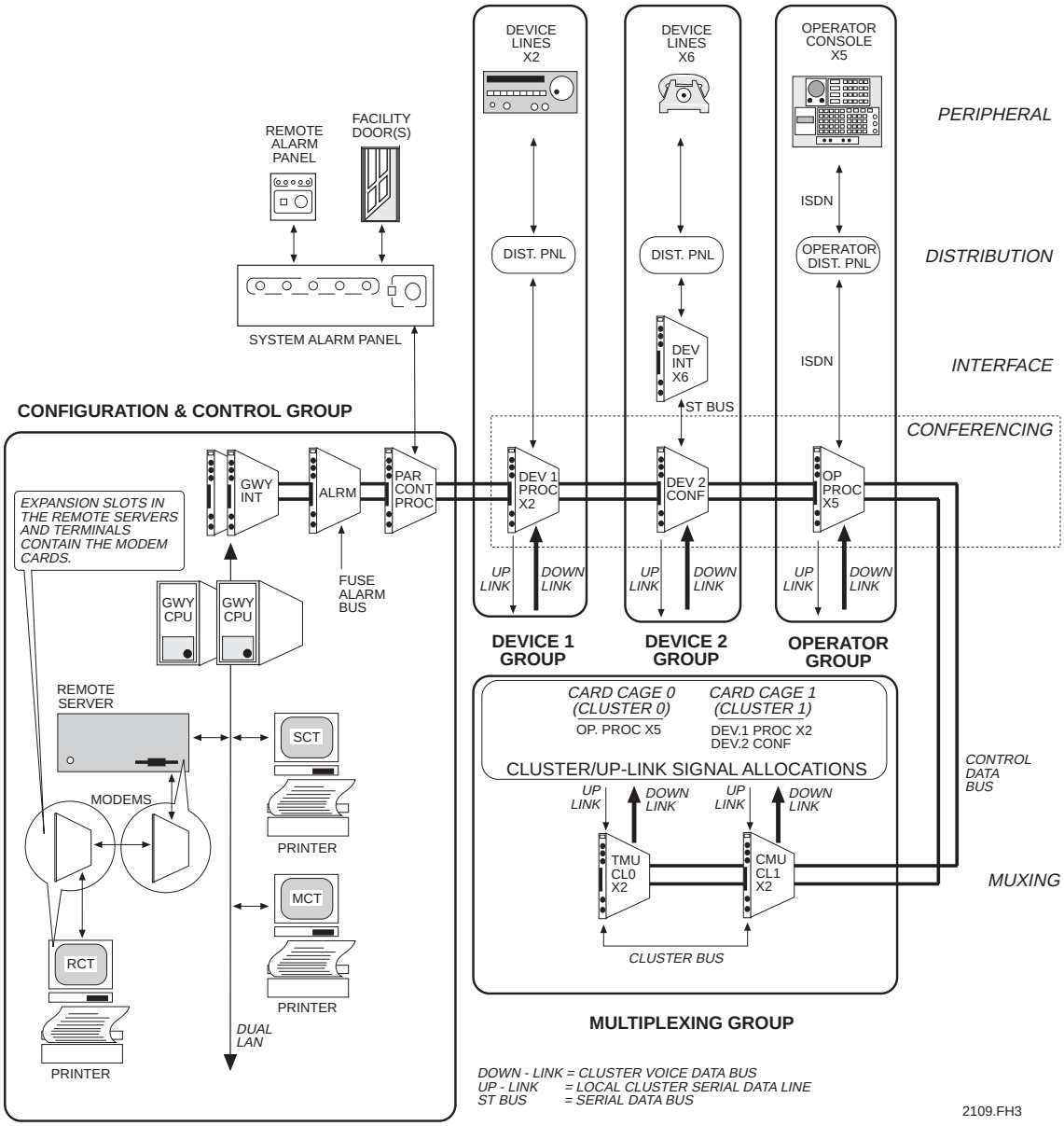


***Figure 4-1. Basic ETVS System Architecture***

The interface, conferencing, and multiplexing equipment consists of circuit boards mounted in card cages. The card cages supply power and I/O access to the boards. There are two types of card cages: the standard 5U card cage (5U=5x1.75"=8.75") that accommodates all card types except the telephone interface cards, and the 4U card cage (4U=4x1.75"=7.00") that accommodates the telephone interface cards and the ring generator.

The 5U card cage backplane possesses a 480-channel voice data bus and a dual control data bus. The 4U card cages do not have a voice data bus or control data bus on the backplane. The 480-channel voice data bus forms the down-link in each cluster that links the TMUs/CMUs to the processor/conferencer boards. Data in the down-link moves from the TMUs/CMUs to the processor/conferencer boards for transmission to the demarc.

Receive data, traveling in the opposite direction, moves from the processor/conferencers to the TMUs/CMUs using the up-link. The up-links for each cluster are redundant. Normally, there is a single redundant pair; however, between the Phone Conferencers and the TMUs/CMUs, four redundant pairs are available.

Circuitry in the TMUs/CMUs places the data on the up-links from each cluster on one of the 16 pairs of the cluster bus. The cluster bus links all the TMUs/CMUs in the system; thus, up-link data in each cluster is processed onto the voice data bus in every other cluster. An independent cable linking the TMUs/CMUs forms the cluster bus.

Control data to all the central rack cards from the configuration and control subsystem uses the control data bus (CDB). The dual CDB links the TMUs/CMUs, all processor/conferencers, and the Alarm and Gateway Interface boards. All cards on the CDB can also communicate control data.

Distribution panels provide port connection to the system for peripheral equipment. Customer equipment connects to the distribution panels via a demarc.

The positions are equipped with the required direct access and indirect access equipment for telephone and intercom communications; radio equipment for frequency selection, push-to-talk (PTT) keying, and main/standby transmitter/receiver radio selection. The positions may be composed of basic modular pushbutton equipment or touchscreen equipment.

Communications are initiated by a key press at hardkey positions or by touching the key pad on the TED screen at TED positions. A position microcontroller monitors the status of the position switches. When a valid switch closure is made, the position microcontroller recognizes it and relays the data to an associate operator processor at the central rack. The operator processor then issues the command to execute the specific switch function. Simplified block diagrams of the transmit and receive (radio and telephone) audio paths are provided in **Figure 4-2** and **Figure 4-3**. A CODEC (COder/DECoder) at the position converts the transmit/receive signal from analog to digital or visa versa. An ISDN (Integrated Services Digital Network) link provides

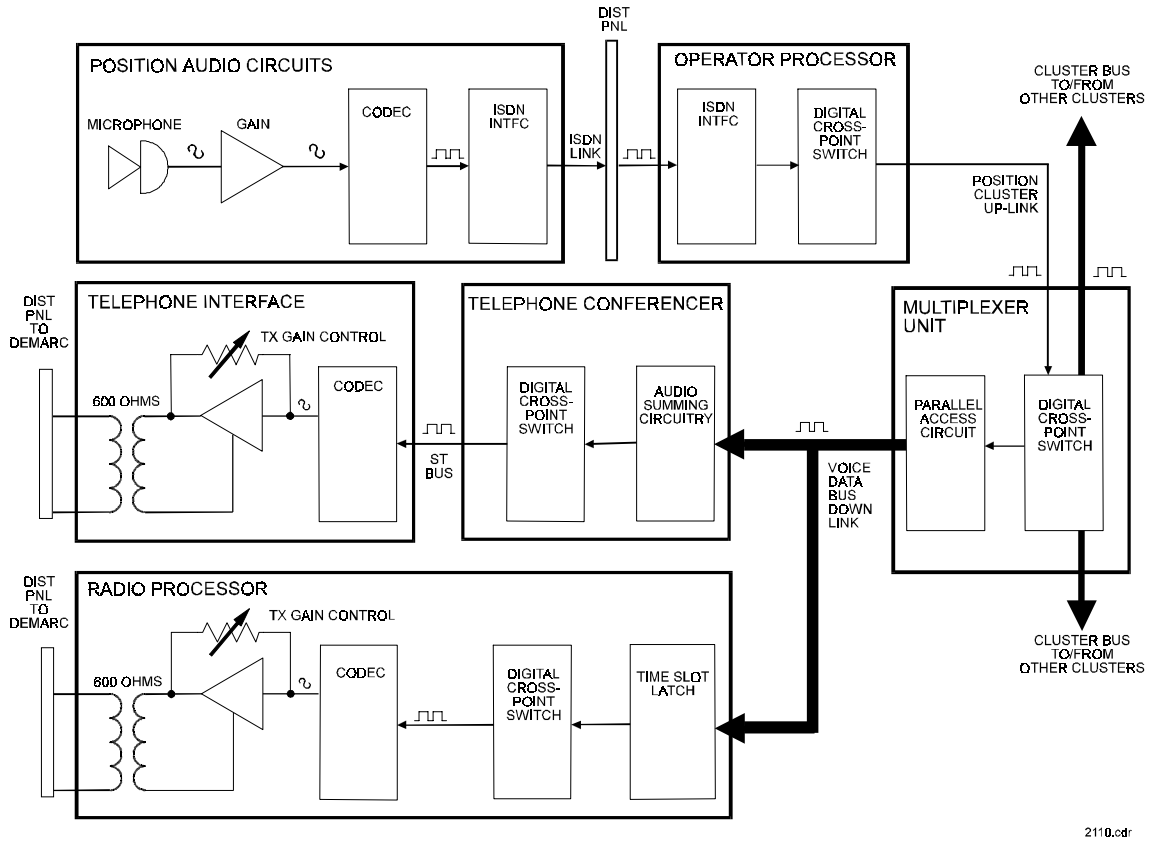


***Figure 4-2. Transmit Audio Path Block Diagram***

communication between a normal position and the operator processor. A split position has 2 ISDN links. The operator processor interfaces the voice, tone and control data from/to the position.

The audio lines (channels) are partitioned into clusters, having up to 30 audio channels in each cluster. At the central rack, each processor (radio, telephone, operator) places its digitized audio onto a cluster up-link that carries the channels in specified time slots (time division multiplexed). The up-links connect to the multiplexer unit which multiplexes up to 16 clusters to form the voice data bus; see paragraphs 4.1.2 and 4.1.8).

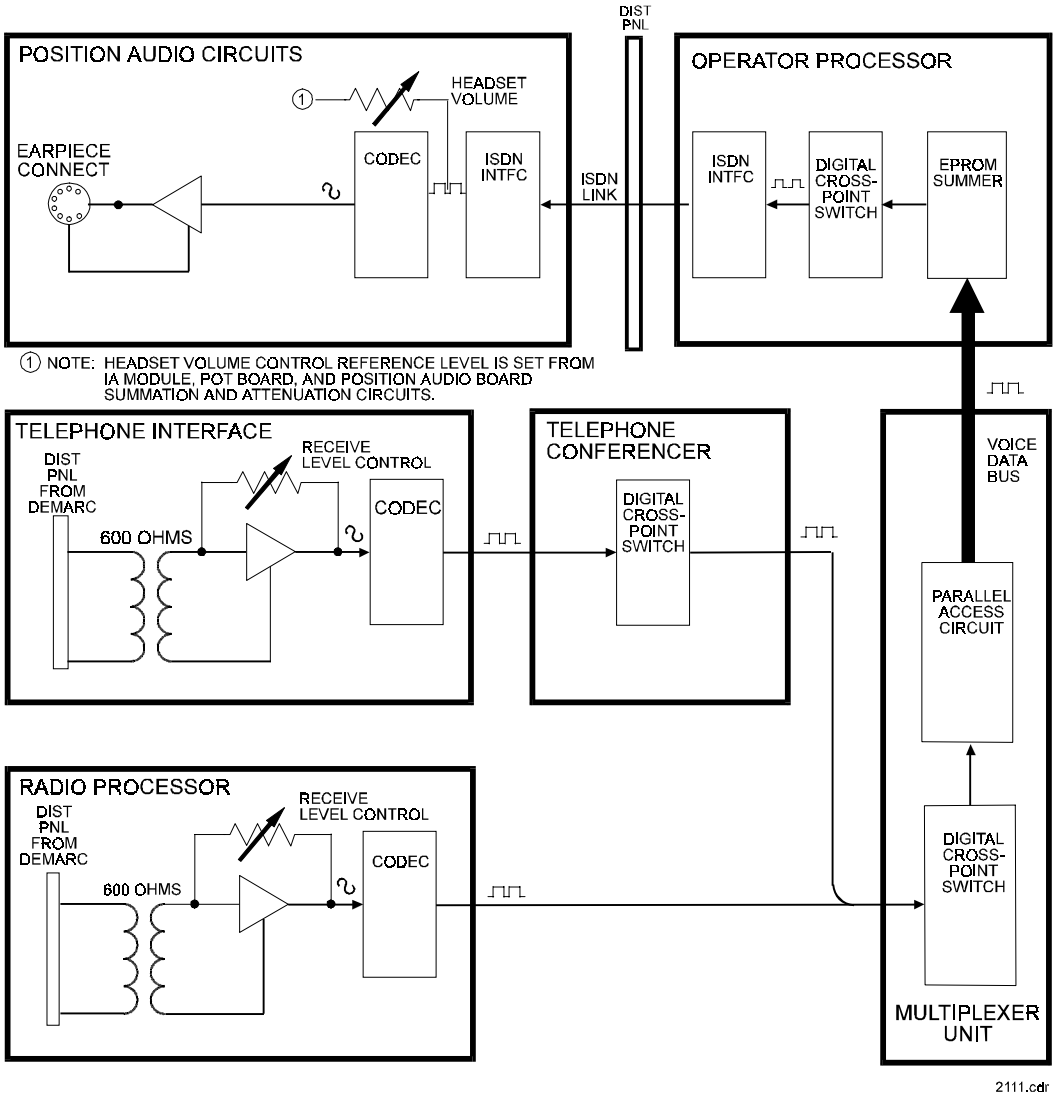


***Figure 4-3. Receive Audio Path Block Diagram***

In the transmit path, the microphone audio is digitized at the position and sent to the Operator Processor over the ISDN link. The Operator Processor places the voice data on the up-link to the TMU/CMU. The TMU/CMU unit multiplexes the voice data onto the voice data bus. The device (radio/telephone) processor/conferencer employs a time slot decoder to pick its data channel off the voice data bus. The digitized signal is decoded to an analog signal, conditioned and output to the telephone line or transmitter. In the receive path, the receive audio is digitized and applied to the multiplexer which places it on the voice data bus. The operator processor, using an EPROM summer, accomplishes digital summation/conferencing of selected audio time slots. The receive audio is transmitted over the ISDN link to the position where it is converted to analog and applied to the position audio circuits.

The system provides both direct access (DA) and indirect access (IA) intercom. For direct access, an operator depresses a single configured DA selector to initiate a call. For indirect access, the operator uses an IA keypad at the position. The operator can call another operator via the IA keypad whether or not the calling operator has a DA key configured for the called operator. The routing of audio between positions uses the same scheme as for telephone/radio described above.

The system is reconfigurable. System reconfiguration is the capability to add or delete entities from the system (operator position, radio circuit, telephone circuit) and the capability to rearrange existing entities at the positions (reassigning pushbuttons). This is accomplished through the Supervisor Configuration Terminal; see paragraph 4.1.1 below.

The central equipment is housed in standard equipment racks and comprises the multiplexing, interface, control-monitoring, and power equipment.

The configuration terminals comprise computer terminals (PCs) and are part of the configuration and control subsystem.

### 4.1.1 Functional Groups

The following paragraphs define the individual unit types included in each functional group shown in **Figure 4-1**.

***Peripheral Group.*** This equipment provides operator control and operator and subscriber audio access to the system. This group includes the operator position equipment and the customer-furnished telephone lines and/or radio transmission lines to the demarcs. The demarcs are the demarcation tie point for all subscriber telephone lines and/or radio channels connected to the system. In some applications, these lines are tied directly to the distribution panels.

An integrated services digital network (ISDN) links the positions to central. The ISDN format consists of two audio channels and one data channel in each frame. This format is known as 2B+D and conforms to CCITT 1.430 and ANSI TI.605 Recommendations. Subscriber network interface circuits (SNICs), located at the position and at the central rack, multiplex framing, clock, control, and audio data to form the transmit ISDN bit stream and demultiplex the receive ISDN signal into its components. The SNIC is a bi-directional device.

***Distribution Group.*** The distribution equipment consists of distribution panels on the rear of the central equipment rack that accept the cables from the demarc and operator positions and feed them to the appropriate units of the central rack equipment in the pin-out configurations required by the central rack units.

***Interfacer Group.*** These units interface the analog audio of the radio, telephone and recorder lines with the digital audio format of the conferencing and multiplexing groups.

***Conferencing Group.*** The processor and conferencer units form this functional group. These units connect individual voice channels on the 480-channel voice bus to the voice lines they serve, based on configuration and control information received over the dual control data bus. Each processor serves a single radio channel or operator position (split or non-split) with each conferencer serving up to 30 telephone channels. The processor/conferencers also establish the content of the cluster up-link voice data frame to the TMU or CMU from each card cage (refer to paragraph 4.1.3 for a description of the cluster voice data frame). Each cluster voice data frame contains the digitized voice information for each active channel in the cluster and the silence data for the inactive channels.

***Multiplexing Group.*** The multiplexing equipment, consisting of the main and standby Timer/MUX and Cluster/MUX units (TMUs/CMUs or MUX units), controls the sequential flow of channel data over the 480-channel voice data bus to the processor/conferencers in each equipment group. The multiplexing scheme is described in paragraph 4.1.3.

***Configuration and Control Group.*** See **Figure 4-4**. This functional group consists of the Alarm Unit, Gateway Interfaces, Gateway Computers, the dual LAN, Configuration Terminals, and Remote Servers.

The system's software operating system is stored and implemented by equipment in this group. System configuration control is performed by this equipment based on user information stored in the configuration software. User interface is provided by the Supervisor Configuration Terminal (SCT), for system configuration purposes, and the Maintenance Configuration Terminal (MCT), for maintenance purposes. Remote configuration and maintenance terminals are also linked to the system by telephone line via Remote Servers. Each remote SCT and MCT connected to the system requires a Remote Server and phone line.

The user defines the system configuration and operator position functions using the SCT. After defining the configuration, the user saves it as a map file to the Gateway Computer hard drive across the LAN connecting the SCTs and MCTs to the Gateway Computers. More than one configuration map can be defined by the user; any one of which can be down loaded to the system. The user can edit existing maps as required; however, each

map must reflect the current hardware installation of the system; if it does not, an alarm occurs and the mismatch is identified at the SCT.

For the system to function, the desired map on the Gateway hard drive is written to the EEPROMS in each of the system device processors. Each device processor receives its own map. In addition to the configuration software, each device processor requires its own firmware to perform its system tasks. Upon power up, each processor loads this information from its EPROMs.

During system operation, diagnostic and system operating status information is returned to the SCTs and MCTs. The Gateway Computers interface the dual LAN, on which the SCTs and MCTs reside, with Gateway Interface cards in the central rack. These cards in turn interface the control data bus. Thus diagnostics and status information reaches the SCTs and MCTs from the device processors via the dual control data bus, Gateway Interfaces, Gateway Computers and dual LAN.

At system power up, the SCT designates the first Gateway Computer to be turned on as the “main gateway” and, by association, the LANs and Gateway Interface connected to it become part of the main communications path. The SCT designates the second Gateway Computer and its associated Gateway Interface as “standby”. If the main path fails, the standby path immediately takes over communications and the SCT/MCT reports the main Gateway Computer as failed. When new maps are down loaded, the SCT writes them to both Gateway Computer hard drives.

The system event log on both the MCT and SCT is exactly 1 hour behind standard time. As such, all events are logged 1 hour off. The unit most affected by this occurrence is the Gateway Computer, which functions in this system as a fileserver. There is a network procedure that allows the date and time to be adjusted on this computer when necessary. All network date/time changes are done from the SCT. Date and time changes for the entire system, including the gateway PCs, are effected from a single SCT, via use of the procedures in paragraph 2.4.3.7 of the *SCT User Manual*.

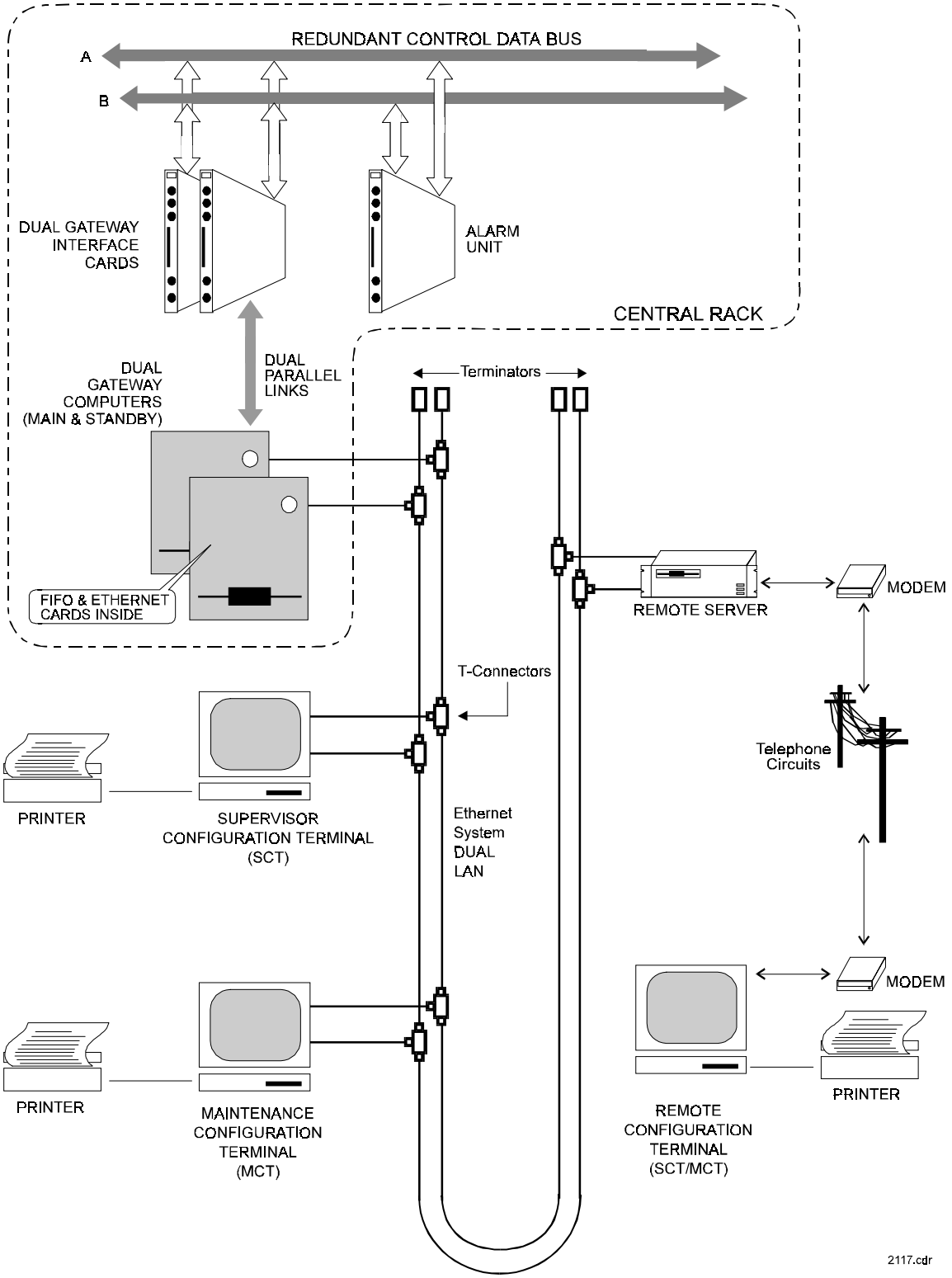


*Figure 4-4. Configuration and Control Equipment Group Block Diagram*

The printers connected to each configuration terminal can be used to provide a hard copy record of reported failures and when they were cleared. The printer can also provide a hard copy record of configuration maps, reconfiguration messages, map change messages, diagnostic messages, and device initialization. The hard copy output is presented as formatted text reports.

The Alarm Unit monitors the status of the two control data buses (designated A and B on the Alarm Unit front panel). If any of the bus lines in either bus fails, it reports the bus failure to the SCT/MCT which initiates a SYSTEM FAULT alarm to the System Alarm Panel. Paragraph 4.2.7 describes this and other system functions of the Alarm Unit and System Alarm Panel.

### 4.1.2 System Buses

There are three system-wide buses: a dual control data bus (CDB), a voice data bus (VDB), and a cluster bus (refer to **Figure 4-1**).

***Dual Control Data Bus.*** The CDB resides on each 5U card cage backplane and consists of two carrier-sense multiple access buses with collision detection. Each bus is 10-bits parallel with 8 bits reserved for data, 1 bit for data strobe, and 1 bit for carrier sense. The CDB interconnects the processor/conferencers in each equipment group with the Gateway Interface. System configuration control data is sent over this bus to the processor/conferencers where it is used to establish communications links conforming to the requirements of the current user configuration, and status information is returned over the bus. The processor/conferencers can also communicate with each other across this bus. The CDBs are redundant; if one fails, the other carries the data message.

Identical messages are sent over both buses. Control and data communications occur over the A bus unless a bus fault is detected, in which case the communication takes place over the B bus.

The central communications network uses a random bus access technique, followed by a message broadcast/reception routine. Random bus access happens when a microprocessor, desiring CDB access, tests the in-use line. If the bus is busy, the processor waits until the bus is free. If not in use, the processor activates the in-use line. The processor gaining bus control generates an interrupt to all other processors. This interrupt starts the receiving processor’s execution of the receipt of message interrupt handler routine. After capturing the CDB, the microprocessor writes each byte into an output register. The other processors receive the data bytes on both redundant buses maintaining a separate buffer for each. This cycle continues until the

transmission is completed. After sending the message and checksum, the transmitting processor turns off the in-use line. Each receiving processor confirms the validity of the checksum from at least one of the redundant buses before processing the message.

The TMUs/CMUs and Alarm cards also sit on these buses for system diagnostics purposes (refer to Section 5).

***Voice Data Bus.*** The VDB consists of an 8-bit parallel bus installed on the backplane of each card cage, except the telephone card cage. The bus has a capacity of 512 channels; however only 480 are available for voice data. The 480-channel voice data frame contains the digitized voice data for all active channels in the system plus silence data for all inactive channels. Bus data flow is synchronized by signals supplied by the redundant TMUs. Special signals occupy some of the remaining 32 channels.

***Cluster Bus.*** The cluster bus links the cluster I/O ports of all the TMUs/CMUs in the central rack. It is carried via cable to each TMU/CMU.

The cluster buses are dual differential ST-buses (serial Telecom bus) that use a synchronous time-division multiplexed (TDM) serial busing scheme operating at 2.048 Mhz to move data. Each bus consists of 16 differential pairs: one pair for each cluster. A system frame pulse, supplied by the TMU, ensures data transfer synchronization over the buses. All the clusters in the system are interconnected by the dual cluster buses.

### 4.1.3 Multiplexing Scheme

All voice communication entering and leaving the system passes over the 480-channel voice data bus as a component of a multiplexed signal. Voice communications enter or leave the system via either a device or a position, depending on the current system configuration and the communications links established by the position operators.

Voice channels are multiplexed in 32 channel groups called clusters. The voice data bus is designed to accommodate a maximum of 16 clusters. A maximum data bus capacity of 16 x 32 channel clusters produces a total capacity of 512 channels for the system.

However, of the 32 channels in each cluster, only 30 are available for channel voice data, with the other two channels reserved for framing and signaling information. Thus, from the 16 clusters, a total of 480 channels are available on the bus for voice data. Specific channel allocations are described under System Channel Number Assignment in paragraph 4.1.5.

Data is clocked over the bus at a 4.096 Mbps rate. Therefore, the 64 kbps sampling rate of the audio signal in the encoding circuitry, and the clock rates employed in the muxing, enable the maximum 512 channels to be multiplexed and clocked over the bus in a time frame of 125 µ seconds.

Voice data for each cluster is contained in a 32-word data frame as illustrated in **Figure 4-5**. Each word is comprised of 8 bits; thus, active voice channels contain an 8-bit data formation of 64 kbps companded audio samples. Words 1 through 15 and 17 through 31 are available for channel data and words 0 and 16 are reserved.

Data movement over the voice data bus between each cluster occurs using word interleaving resulting from the muxing sequence in which each cluster concurrently reads and writes its data byte in turn in a fixed cycle starting with Word 0/Cluster 0. **Figure 4-6** shows this interleaving process in which all the 0 words enter the bus in turn from cluster 0 through 15, then all the word ls, then word 2s, etc. through word 31. The complete frame of 32 x 16 words is called the voice-bus data frame.

A system frame pulse, derived from the Timer/MUX unit, defines the boundaries of each data frame on the voice data bus. The rising edge of the 4.096 MHz clock, while the frame pulse is high, coincides with, and occurs at, every Word 0 for cluster 0 (or 125 µ secs) as illustrated in **Figure 4-6**.

Each channel served by the cluster always occupies the same Word in the cluster data frame, and therefore in the voice-bus data frame, whether the channel has voice data on it or not. This provides a completely non-blocking system in which all operator positions and subscribers are allocated a slot on the voice data bus. Channels are assigned numbers for each cluster in the system as described in paragraph 4.1.5. These numbers have unique addresses so that conferences can be stored and summed in any processor/conferencer using any channel on the bus. The processor/conferencer circuitry is designed so that a single data byte on the bus can in fact be summed and sent to any one or all channels in the system.

Each equipment group, located in the central racks, utilizes cluster space in the multiplexing process. Equipment groups of few channels use a portion of a cluster; whereas, larger equipment groups use a complete cluster or several clusters. The

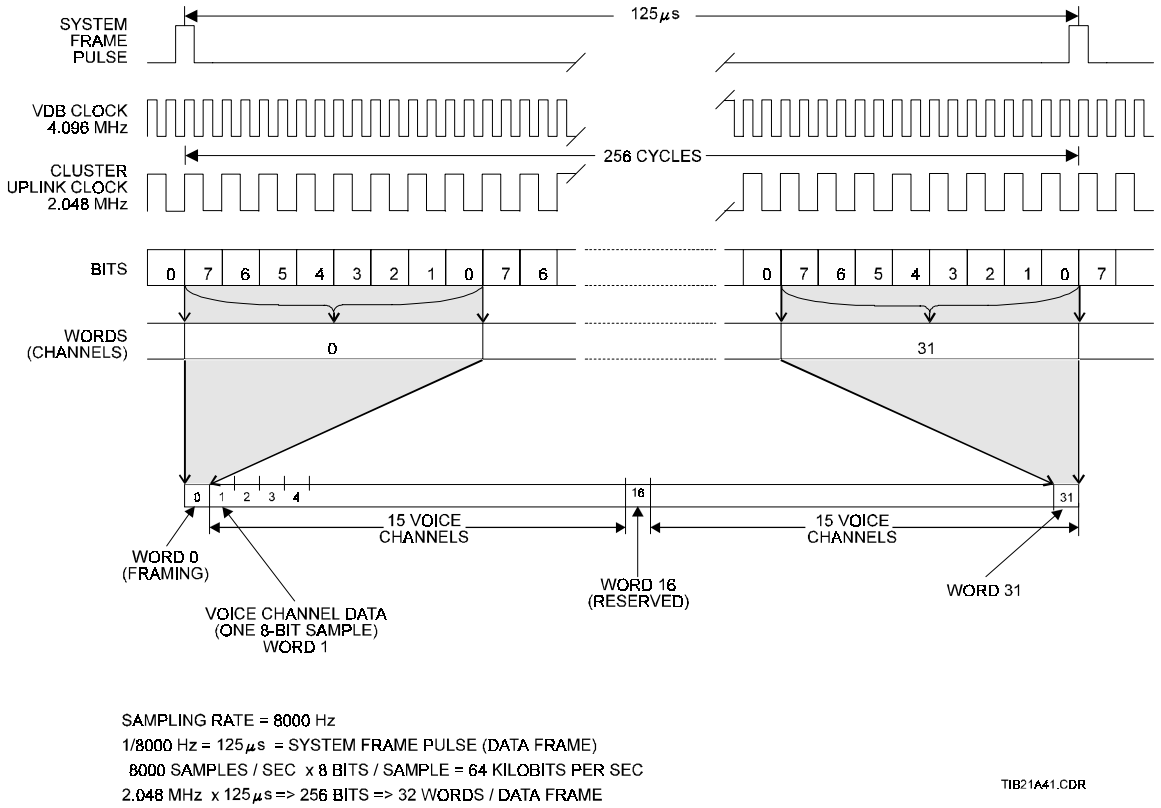


*Figure 4-5. Cluster Channel Data Message Frame*

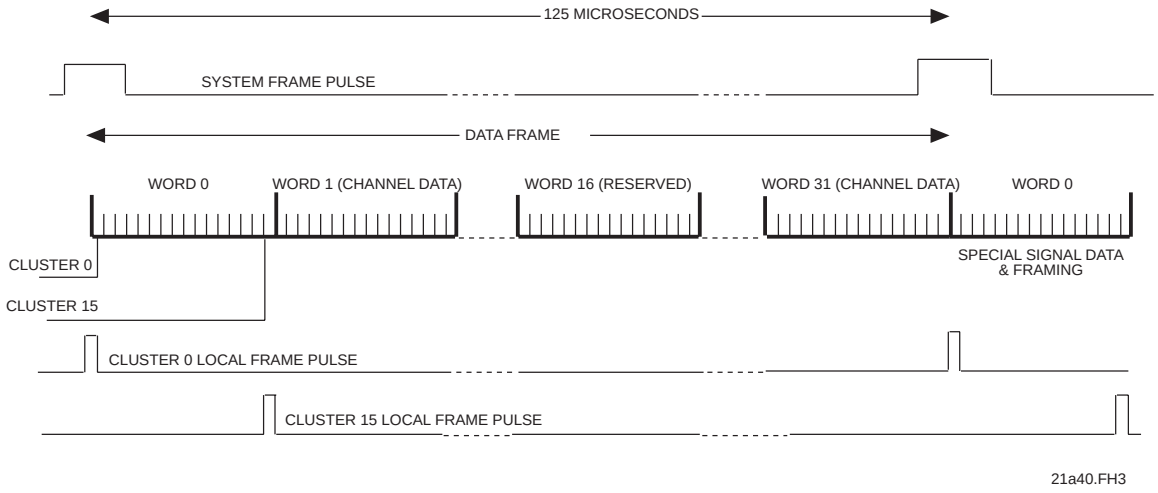


*Figure 4-6. Voice Data Bus Word Interleaving*

equipment group hardware associated with each cluster is installed in card cages. A different card cage is used for each cluster. Some clusters can occupy more than one card cage but one card cage cannot accommodate more than one cluster.

### 4.1.4 Up-link and Down-link MUX Paths

Each cluster is provided with two signal paths; one to and one from the voice data bus. These paths are referred to in this manual as the up-link and the down-link. The up-link is the signal path for incoming channel data to the voice data bus from the processor/conferencers. The down-link is the signal path for outgoing channel data to the processor/conferencers. It is formed by the voice data bus itself and is directly connected to each processor/conferencer.

The up-link is a 32 channel, 2.048 Mhz, redundant ST serial-data link to the TMU/CMU. Each processor/conferencer is tied to the TMU/CMU over an independent redundant up-link. The TMU/CMU assembles the serial data from each processor/conferencer into a voice-bus data frame.

There are two redundant Timer/MUX units (TMUs) co-located with the signal processing cards (usually in card cage 0). They generate the master timing signals required to maintain CMU synchronization and to clock data over the up-links, and down-links. The redundant Cluster/MUX units (CMUs) in other clusters are slaved to the TMUs to synchronize all clusters. The TMUs/CMUs are described in greater detail in Section 5.

**Figure 4-7** illustrates the multiplexing sequence from the individual channel to the voice data bus. The vertical bit streams of 32 channels each represent the cluster up-links formed from the outputs of the processor/conferencers in each cluster.

The processor/conferencer multiplexes all the channels it serves into a serial-bit stream in which each channel always occupies the same slot in the data stream. This data is clocked onto the Central European Post Telegraph (CEPT) up-link at 2.048 Mbps. The system frame pulse-timing signal controls the access sequence of each processor/conferencer to the up-link. The pulse for each processor/conferencer follows 8 clock cycles after the pulse for the previous processor/conferencer in the cycle.

Each TMU/CMU organizes the 16 up-link streams into a data message frame of 32 words. Channel numbers or time slots in the data frame are defined by the system software configuration map and are associated with the unit address of the

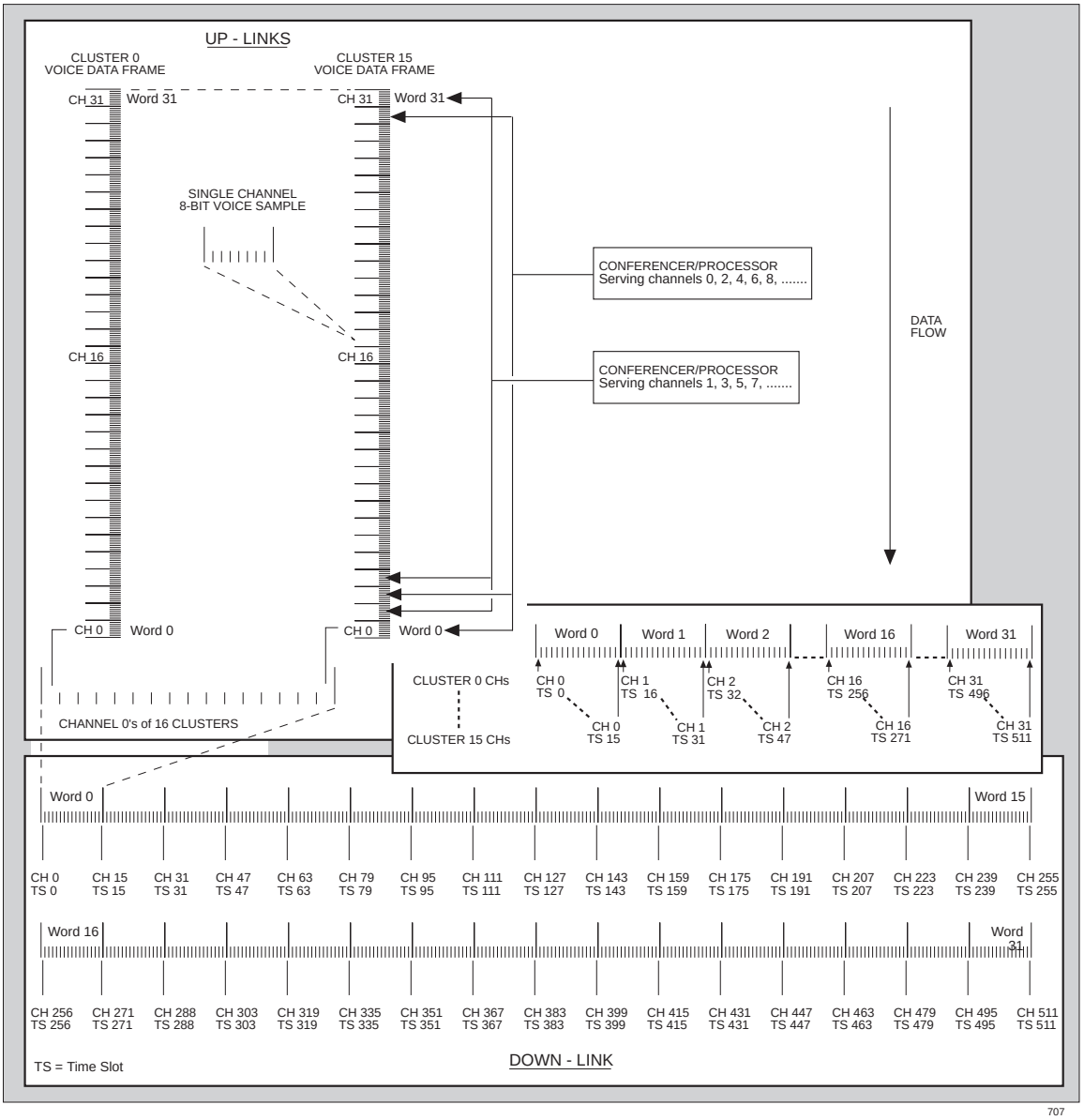


***Figure 4-7. Multiplexing Scheme***

processor/conferencer that processes them. The processor/conferencer's address is determined by the card cage I.D. and slot number in which the processor/conferencer is installed. The processor/conferencers provide no output for inactive or unused channels and therefore the TMU/CMU input remains high for the clock cycles that coincide with these channel slots in the data frame. This is later interpreted as silence in the demultiplexing process.

A signal conversion takes place in the TMU/CMU from the 2.048 Mbps serial format of the ST up-link to the 4.096 Mbps, 8-bit parallel format of the voice data bus. Up to 16

clusters can be processed by the TMUs/CMUs. Bus access is controlled by the local frame pulse for each cluster, which coincides with Word 0 for each cluster and occurs ever 125µ secs. Access for each cluster is 8 bits apart in the sequence.

In the down-link signal path, all 480 data words are clocked in the 8-bit parallel format of the bus to the processor/conferencers in the card cage. At the cluster level, the boundaries of the voice data frame are defined by the cluster local frame pulse. This pulse occurs every Word 0 and thus every 125µ secs. as shown in **Figure 4-6**.

Depending on the conferencing information sent to the processor/conferencers from the Configuration and Control Equipment group, the cross-point switches in each processor/conferencer send the voice data to the appropriate interfaces based on channel number assignments. The interfaces decode the digital voice data to analog signals.

### 4.1.5 System Channel Number Assignment

Each 8-bit slot in the voice-bus data frame is assigned a channel number. This channel number is assumed by the system I/O port (telephone and/or radio and operator voice channel) which utilizes this word in the data frame. Not all words are used and not all are occupied by system I/O channels.

For example, if there are only five clusters of 30 voice channels each in the delivered system, only 150 data frame slots are used for voice channels. However, the multiplexing scheme provides for a total of 16 x 32 channel clusters, or 512 channels. The additional channels, unused except those reserved for special signals, still occupy a channel slot in the voice-bus data frame. The 16 clusters are numbered 0 through 15 and insert their channel information on the buses in the sequential order of Cluster 0- Cluster 15 (space is allocated for non-existent clusters). The system I/Os are assigned channel numbers in the 16 clusters as follows:

| Voice Channels Used | | Unused Voice Channels | |
|---|---|---|---|
| Cluster O | 0,16,32..- 496 | Cluster 5 | 5,21..- 501 |
| Cluster 1 | 1,17,33..- 497 | | |
| Cluster 2 | 2,18..- 498 | | |
| Cluster 3 | 3,19..- 499 | | |
| Cluster 4 | 4,20..- 500 | | |
| Cluster 15 | 15,31,47..- 511 | | |

NOTE

Two channels in each cluster, assigned to Word 0 and 16 are reserved.

### 4.1.6 Cross-Point Switch Control and Channel Switching

Cross-point switches (CPS) are used in a number of units in the system. They are employed as multiplexing components or simply for signal switching between I/O ports. In either application, the CPS is operating as a sophisticated switching matrix. Data enters and leaves the CPS in serial ST-bus format; however, all data movement within the switch matrix is in 8-bit parallel format.

Switching matrix configurations must first be defined for each conference (channel grouping) routed through the matrix. This is accomplished by the microprocessor which writes configuration data to the CPS to establish which ST-bus I/Os are used and channel address data for the channels forming the current conference. Destination channel selection is made when the required ST-bus output is enabled. In most cases, this output serves more than one channel and further demultiplexing to the individual channel level must take place on other cards in the signal path.

**Figure 4-8** is a simplified block diagram of the CPS showing the basic functional circuit blocks. Voice data is clocked through an internal channel data memory in a fixed sequence. The information from each channel in the conference is picked from this memory and routed to the required ST-bus output for the destination channel. This routing is based on the configuration information supplied by the microprocessor. Control information is written to the connection and channel address memories by the microprocessor via the control register and channel access address register. Both the connection and channel address memories are structured identically to the channel data memory. Thus, the information stored in each channel location in these memories corresponds to that stored in the same channel locations in the channel data memory.

The connection memory determines the output mode of each channel and enables the output for each channel. Both the output ST-bus stream and the destination channel for each conference list is addressed by the channel address memory. The three most significant bits select the output stream and the remaining five bits address the channel data in the channel data memory.

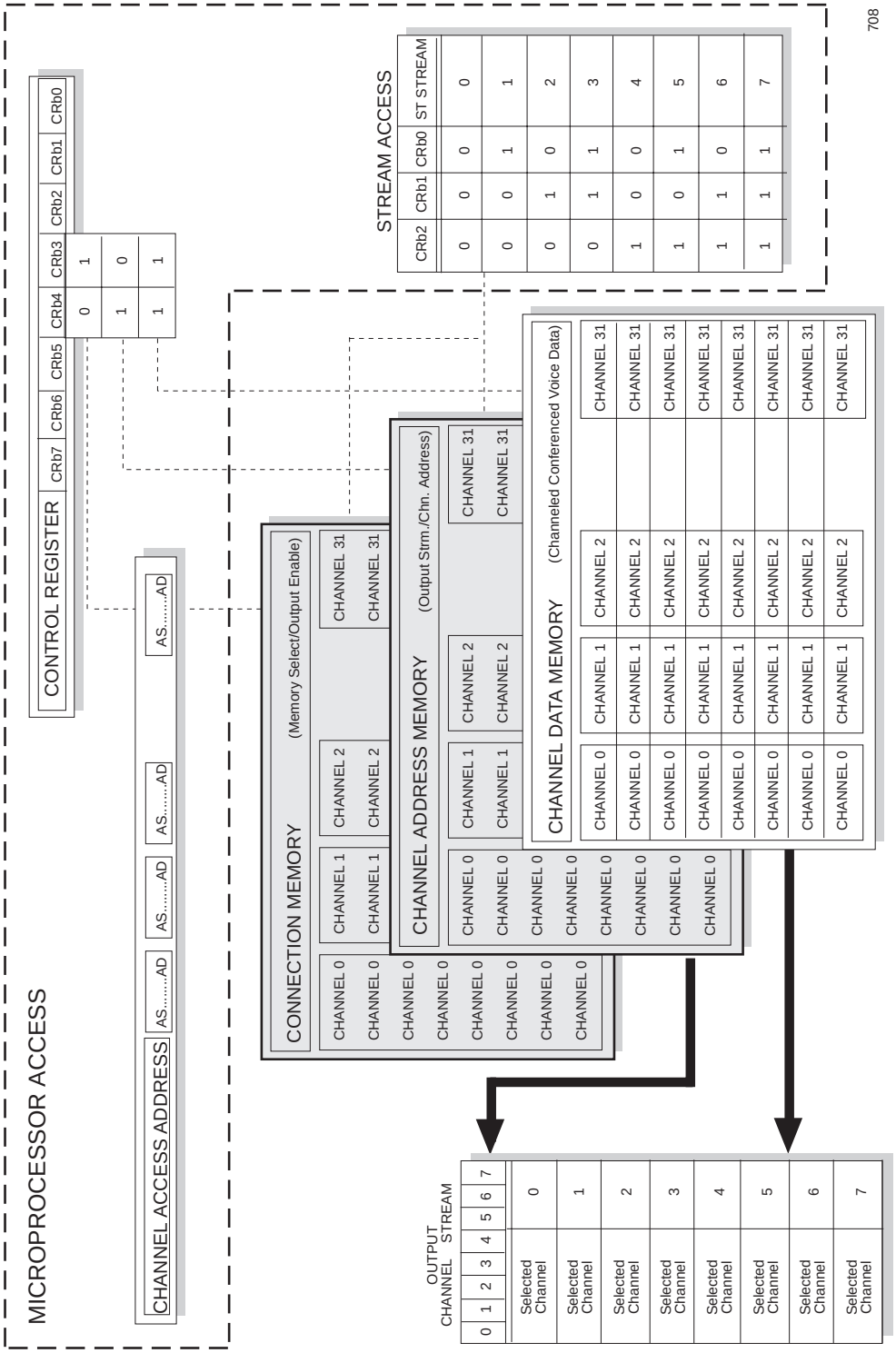


*Figure 4-8. Cross-Point Switch Simplified Diagram*

### 4.1.7 System Software

Refer to **Figure 4-9**. The operating system software hierarchy is composed of one Computer Software Configuration Item (CSCI). The CSCI breaks down into 16 Top-Level Computer Software Components (TLCSCs) that are unique microprocessor programs for each system interface. Each program type contains two classes: system software and application software. The system software contains the operating system, interrupt structure, and the network codes for the microprocessor communication. The application software contains a dispatcher routine that executes lower level computer software in a round-robin fashion.

A definition of each TLCSC function is provided in **Table 4-1**. The functional assignments for each TLCSC are listed in **Table 4-2**. Subparagraphs 4.1.7.1 through 4.1.7.7 describe the functional assignments.

#### 4.1.7.1 Initialization

Initializes system at power-up. Requirements include establishing the baseline configuration and assignments, and preparing the system for operation. All TLCSCs perform the initialization functions at least once during power-up.

#### 4.1.7.2 Reconfiguration

Reconfiguration is the capability to:

- Add or delete entities (e.g., position, radio circuit, phone circuit) to/from the system
- Rearrange existing entities (e.g., reassigning the keys at one or more positions)

Reconfiguration of telephone, radio, data link, parallel I/O, and operator TLCSCs includes adding, deleting, or reassigning them in the system. Reconfiguration of these TLCSCs must reflect the current hardware installation and physical level channel assignments. Reconfiguration of position, server, gateway, TMU/CMU, alarm, and configuration terminal TLCSCs includes global and local task assignments.

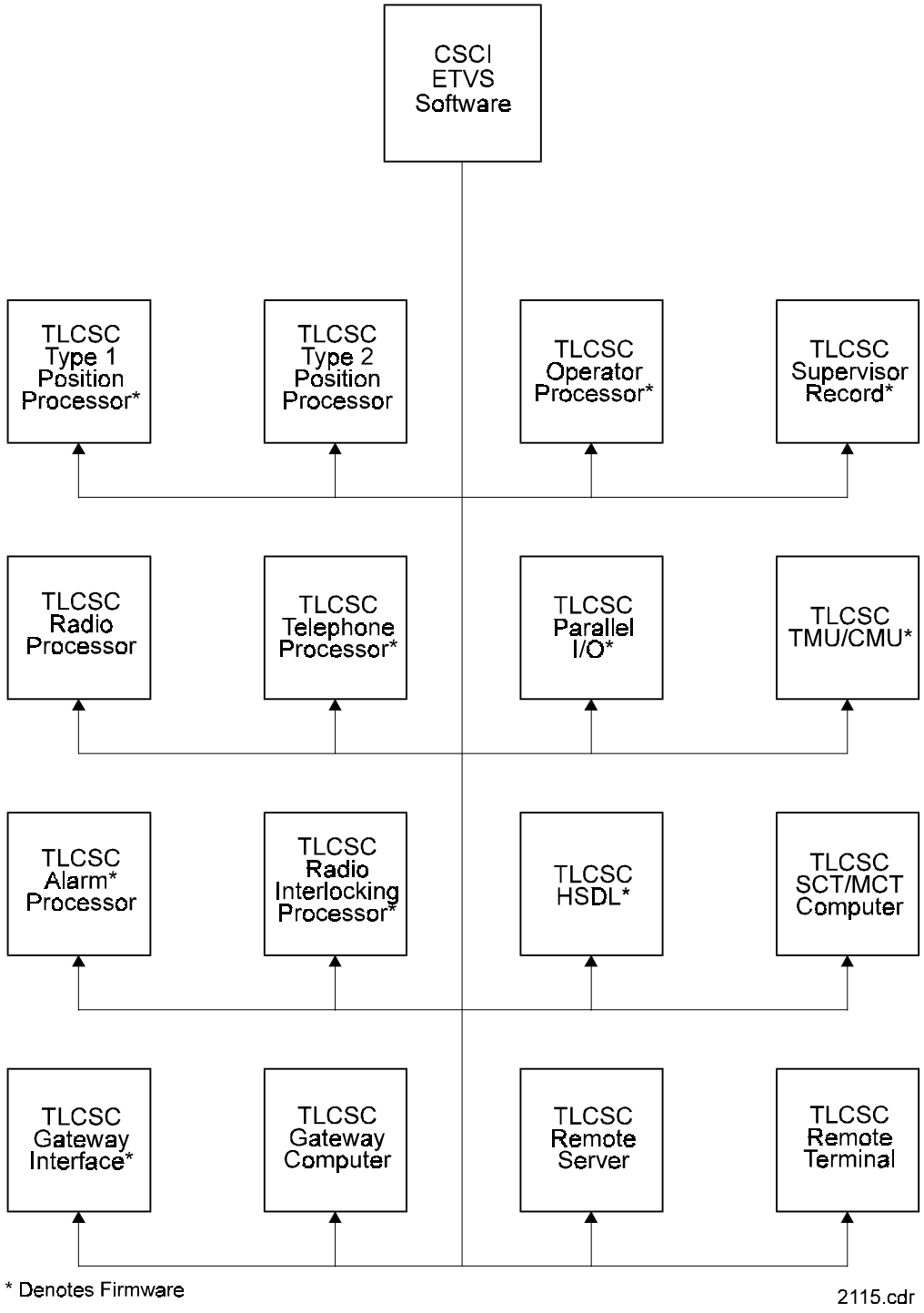


*Figure 4-9. Operating System Software Hierarchy*

### *Table 4-1. TLCSC Functions*

| TLCSC | REQUIREMENT |
|---|---|
| Gateway Computer | Sends map for system reconfiguration; maintains system configuration maps |
| Remote Server | Provides connectivity for LAN communications to the remote maintenance terminal |
| Position Processor (Type 1 and 2) | Controls light, key and audio functions at operator console |
| TMU/CMU | Maintains system timing, manages up-link and down-link MUXing, and TMU switch-over in the event of a TMU failure |
| Operator Processor | Performs communications between the operator and other participants in the network (operator, radio and telephone); provides audio switching for operators |
| Telephone Interface | Controls the telephone interfaces and communicates with other control bus participants |
| HS Data Link | Handles communications between segments of the control data bus |
| Parallel I/O Processor | Controls remote facility door-lock release |
| Radio Processor | Controls the radio device card and communicates with other central bus participants |
| Remote Radio | (Interlocking Processor) Controls radio channel classmarking as either *interlocked* or *interlocking* |
| Alarm Processor | Polls system units for current status; collects error messages; reports error conditions to the SCT/MCT |
| Configuration Terminal | (SCT/MCT) Monitors the system and allows reassignment and reconfiguration. Also provides system status |
| Remote Terminal | (Remote SCT/MCT) Monitors the system and allows reassignment and reconfiguration from a remote location; reports remote power rack status. |
| Supervisory Record | Controls the Operator Processor (Supervisory Record) devise card to route audio from selected positions to the supervisor position recorders for monitoring. |

***Table 4-2. TLCSC Functional Assignments***

| TLCSC | REQUIREMENT |
|---|---|
| Gateway | Initialization |
| | Reconfiguration |
| | Radio Communications |
| | Intercom Communications |
| | Telephone Communications |
| | Special Functions |
| | Diagnostic/Maintenance |
| Remote Server | Initialization |
| | Reconfiguration |
| | Radio Communications |
| | Intercom Communications |
| | Telephone Communications |
| | Special Functions |
| | Diagnostic/Maintenance |
| Position Processor (Type 1 and 2) | Initialization |
| | Reconfiguration |
| | Radio Communications |
| | Intercom Communications |
| | Telephone Communications |
| | Special Functions |
| | Diagnostic/Maintenance |
| | Position Controller Interface |
| TMU/CMU | Initialization |
| | Diagnostic/Maintenance |
| Operator Processor | Initialization |
| | Reconfiguration |
| | Radio Communications |
| | Intercom Communications |

***Table 4-2. TLCSC Functional Assignments (Continued)***

| TLCSC | REQUIREMENT |
|---|---|
| | Telephone Communications |
| | Special Functions |
| | Diagnostic/Maintenance |
| Telephone Interface | Initialization |
| | Reconfiguration |
| | Intercom Communications |
| | Telephone Communications |
| | Special Functions |
| | Diagnostic/Maintenance |
| | Phone |
| HS Data Link | Initialization |
| | Reconfiguration |
| | Radio Communications |
| | Intercom Communications |
| | Telephone Communications |
| | Special Functions |
| | Diagnostic/Maintenance |
| Parallel I/O Processor | Initialization |
| | Reconfiguration |
| | Diagnostic/Maintenance |
| | Locking Device Interface |
| Radio Processor | Initialization |
| | Reconfiguration |
| | Radio Communications |
| | Special Functions |
| | Diagnostic/Maintenance |
| | Radio Device Interface |
| Remote Radio | Special Functions |

***Table 4-2. TLCSC Functional Assignments (Continued)***

| TLCSC | REQUIREMENT |
|---|---|
| Alarm Processor | Initialization |
| | Reconfiguration |
| | Special Functions |
| | Diagnostic/Maintenance |
| Configuration Terminal | Initialization |
| | Reconfiguration |
| | Diagnostic/Maintenance |
| Remote Terminal | Initialization |
| | Reconfiguration |
| | Diagnostic/Maintenance |
| Supervisor Record | Initialization |
| | Reconfiguration |
| | Diagnostic/Maintenance |

#### 4.1.7.3 Radio Communications

Establishes and manages operator communications paths via peripheral radios. This capability requires allocation of the radio interface function to the following TLCSCs:

- Radio
- Position
- Operator

#### 4.1.7.4 Intercom Communications

Establishes and manages operator communications paths with other operator positions. This capability requires allocation of the intercom communications function to the following TLCSCs:

- Position
- Operator
- Telephone

Intercom line access includes direct and indirect calls of the following types:

- Non-override
- Override
- Conference
- Special Functions

#### 4.1.7.5 Telephone Communications

Establishes and manages operator communications paths via external telephone lines (dial codes are programmed in firmware look-up tables). This capability requires allocation of the telephone communications function to the following TLCSCs:

- Telephone
- Position
- Operator

#### 4.1.7.6 Special Functions

Telephone and intercom communications require the following special functions:

- Headset/Loudspeaker selection
- Line release
- Call hold
- Speed Dial
- Caller ID
- Position connect/disconnect
- Air/ground and ground/ground coupling
- Instruction mode
- Call Forward
- Position monitor

These capabilities require allocation of special functions software to the following TLCSCs:

- Radio
- Position
- Operator

- Telephone

Radio communications require the following special functions:

- Frequency add/delete
- Frequency Forward
- Radio Frequency Preemption
- Radio frequency access interlock

These capabilities require allocation of special functions software to the following TLCSCs:

- Radio
- Position

#### 4.1.7.7 Diagnostic and Maintenance

Monitors system status. This capability requires allocation of the diagnostic/maintenance function of the following TLCSCs:

- Position
- Operator
- Telephone

The system software is pre-installed on the Gateway Computer hard drive and tested at the manufacturer's facility prior to the delivery of the equipment. When first loaded, preliminary system configuration maps are down loaded with the operating system. These initial maps can be used as is or they can be modified to suit specific site requirements. Two types of maps are used to establish system configuration—local maps and a system global map. Local maps are developed for each position. They specify the access rights a position has to the channels switched by the system and the key assignments to those channels at the position keypad.

The global map includes the data generated for all the local maps plus unit slot locations and channel assignments. All configuration changes are made at the SCT using the system control software downloaded with the operating system.

### 4.1.8 Typical ETVS Cluster Functional Description

**Figure 4-10** is a functional block diagram of the basic ETVS system architecture shown in **Figure 4-1**. The voice channel equipment groups—device 1, device 2, and operator—all use cluster space in the muxing process as shown in the cluster up-link allocations window in **Figure 4-1**. Each cluster is served by one or more processor/conferencers that are linked to the cluster's multiplexing units via redundant up-links. The unit quantities shown in the diagram are for example only.

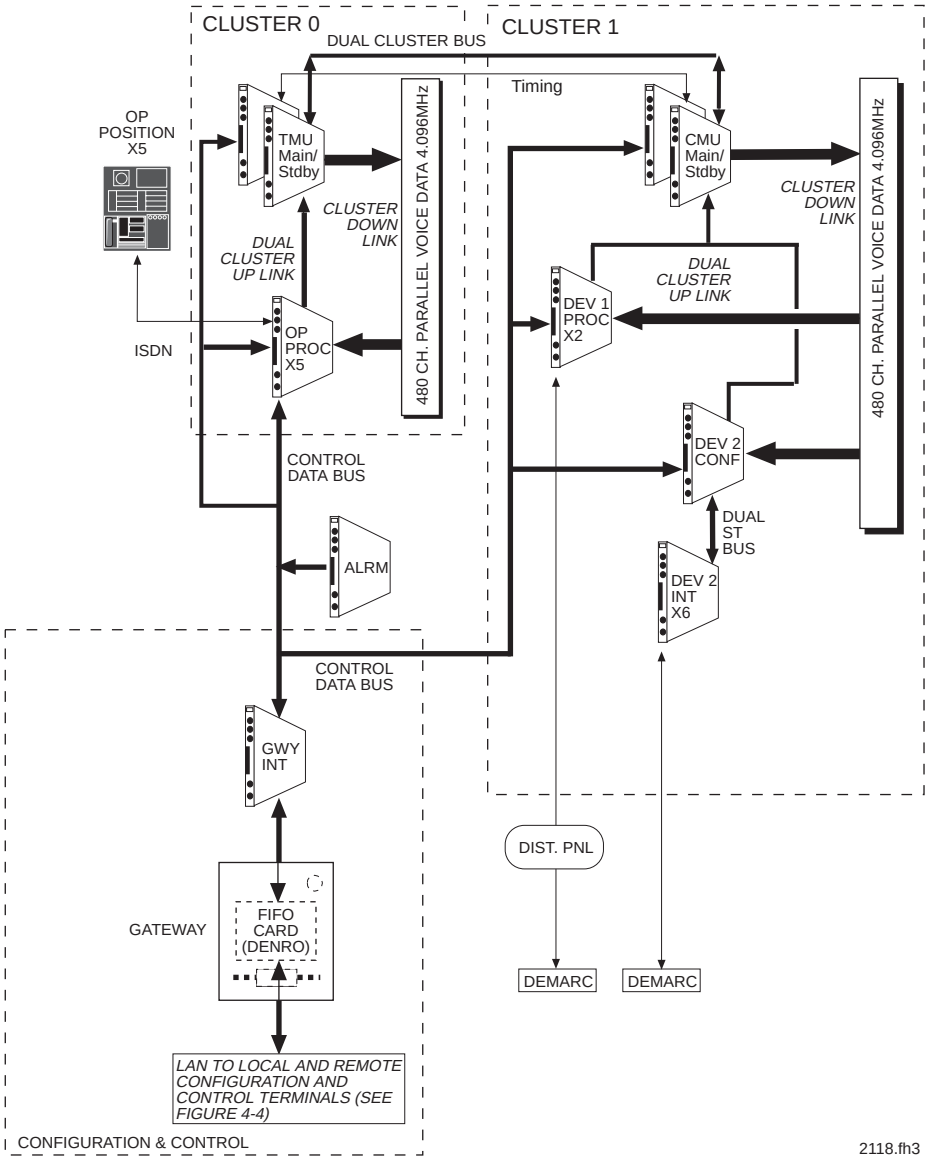


*Figure 4-10. System Functional Block Diagram*

Cluster 0 contains the multiplexed channels of the operator equipment group formed by five operator processor cards installed in card cage 0. The cluster 0 ST up-link feeds cluster message frames to the TMUs installed in card cage 0 using the local up-link residing on the card cage backplane. Only five channels are used.

Cluster 1 contains the multiplexed channels of both device 1 and device 2 equipment groups. These groups are formed by two device 1 processors and a device 2 conferencer that processes signals for six device 2 interfaces; all are installed in card cage 1. The cluster 1 ST up-link from each processor/conferencer feeds cluster message frames to the CMUs installed in card cage 1 using the local up-link on the card cage backplane. In **Figure 4-10**, the cluster multiplexes eight channels; 2 on one up-link and 6 on a second up-link.

The Position Audio board, which is located internal to the IBOP or the card file, produces all call-progress and chime tones used by the operator positions.

By interconnecting the TMUs and CMUs in the two card cages with a cluster bus, the up-links are made common to both clusters and therefore the down-link voice data buses in each cluster carry the same channel data to the processor/conferencers. Thus, any active channel can be accessed at both clusters. The cluster bus is an independent ribbon cable interconnecting the cluster up-link ports at the backplane edge connectors of each of the TMUs and CMUs.

The Alarm card processes all alarm messages received over the control data bus and forwards them, via the Gateway FIFO, to the configuration and control equipment.

### 4.1.9 5U Card Cage

Units of the multiplexing, conferencing, and interfacing functional groups are installed in the 5U card cages. Up to 17 units can be installed in the 17 slots available, with one unit in each mounting slot. The card cage provides signal and power interface for the units installed in it. Power is supplied to the card cage from the central rack power supply via power distribution cabling.

Observe the following convents when installing cards in this card cage. Install TMUs and CMUs in slots 16 and 17. Operator Processors, Radio Processors and Phone Conferencers cannot be installed in slot 17 because the slot does not provide a connector for the I/O pins on these cards.

The backplane is installed on the rear of the card cage. Edge connectors for each slot are mounted on the backplane. All necessary interface cabling to the 17 units is connected at

the backplane. Printed circuitry on the backplane supplies the interconnections between these external connectors and the card edge connectors. Cabling configurations at the backplanes differ depending on the equipment groups in which the card cage is used.

**Figure 4-11** and **Figure 4-12** show the card cage slot connector layout as viewed from the front and rear of the equipment rack. The connections identified in **Figure 4-13** serve the same functions on all 5U card cages. Pin use on the edge connectors are different for each unit type. Refer to the I/O figures provided in the descriptive paragraph for each unit in Section V to identify pin use. As noted in the figure, power is connected at J53 and J54. The common alarm bus to the Alarm unit is also connected at J53 and J54. The daisy-chained A/B Control buses are connected at J37 and J38 on one side of the backplane and J39 and J40 on the other. Each slot edge connector is tied to these buses as shown in **Figure 4-12**. Connectors J33 – J36 are not used. The slot address is hard-wired at each slot edge connector 1-17.

**Figure 4-13** illustrates the relationship between the edge connector pins and the external connectors on the rear of the backplane. Note that pin 39 is connected to address jumper W100 and pins 40, 169, 41 and 170 are connected to address switch Sl. Sl and W100 are located as shown in **Figure 4-11** and **Figure 4-12**. W100 is accessed from the rear of the rack, Sl from the front. W100 and Sl should be set before units are installed in the card slots and before the cover panel on the extreme left side is installed.

Up to 32 card cages can be installed in a central rack. For address purposes, the 32 card cages are divided into two groups: 0-15 and 16-31. W100 selects the group to which the card cage is assigned: Jumper 1-2 (bottom) for group 0-15 and 2-3 (top) for group 16-31. S1 selects the card cage address within the set group. It assigns a hex address of O-F (0 - 15 decimal) Thus, for a card cage address of 12, W100 is jumpered 1-2 (bottom) and S1 is set to “C.” All settings for your system are made at the factory before shipment.

If a replacement card cage must be installed, check the address settings of S1 and W100. At system power-up, incorrect addressing will result in error messages at the SCT as the system boots up. These messages will most likely refer to incorrectly located device interfaces.

**Figure 4-14** illustrates the buses resident on the 5U card cage backplane and the bus interconnection between multiple card cages. The A and B Control Data Buses on each backplane are cabled to form two complete loops, usually in the fashion shown

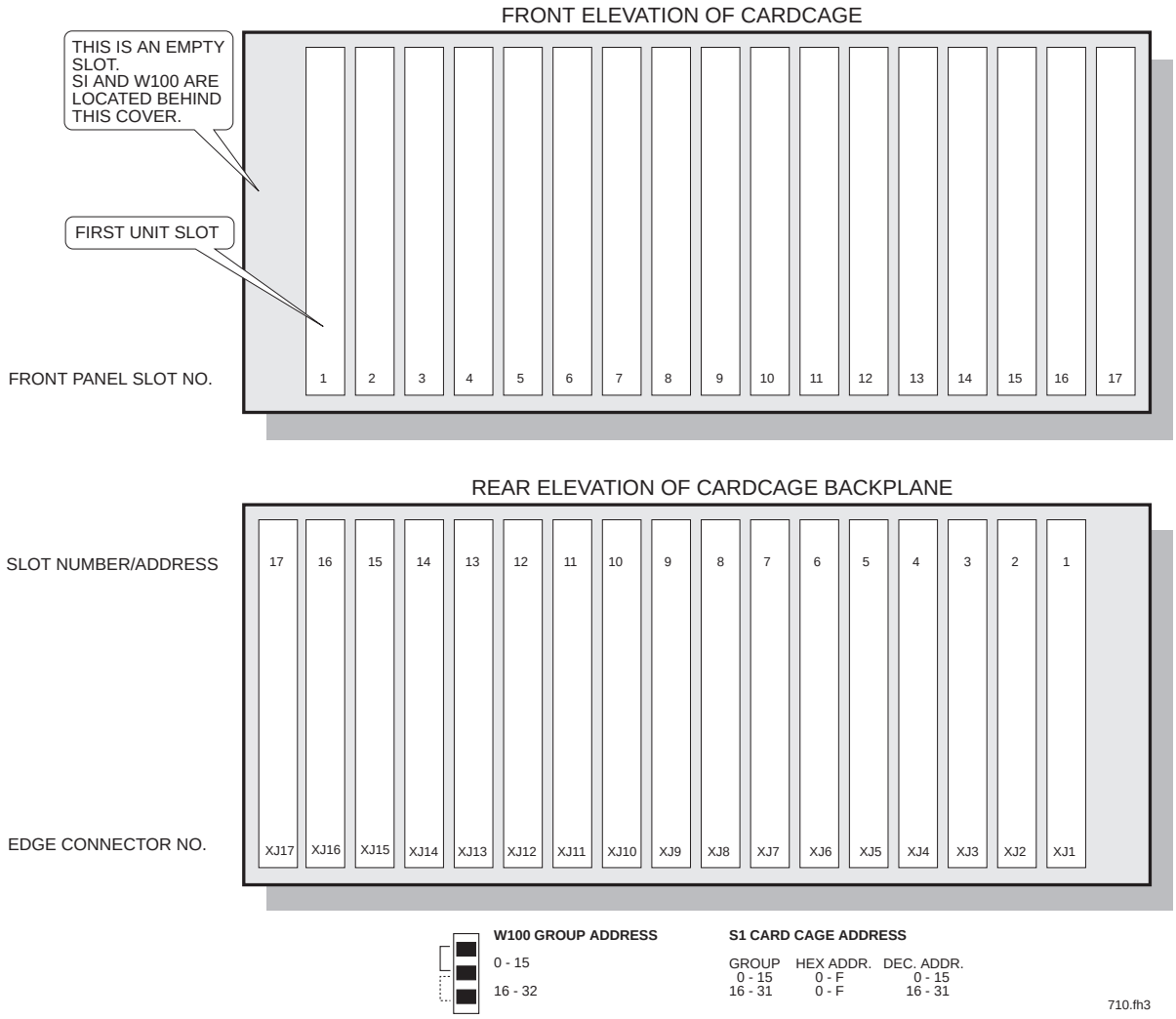


***Figure 4-11. Card Cage Front and Rear Elevations***

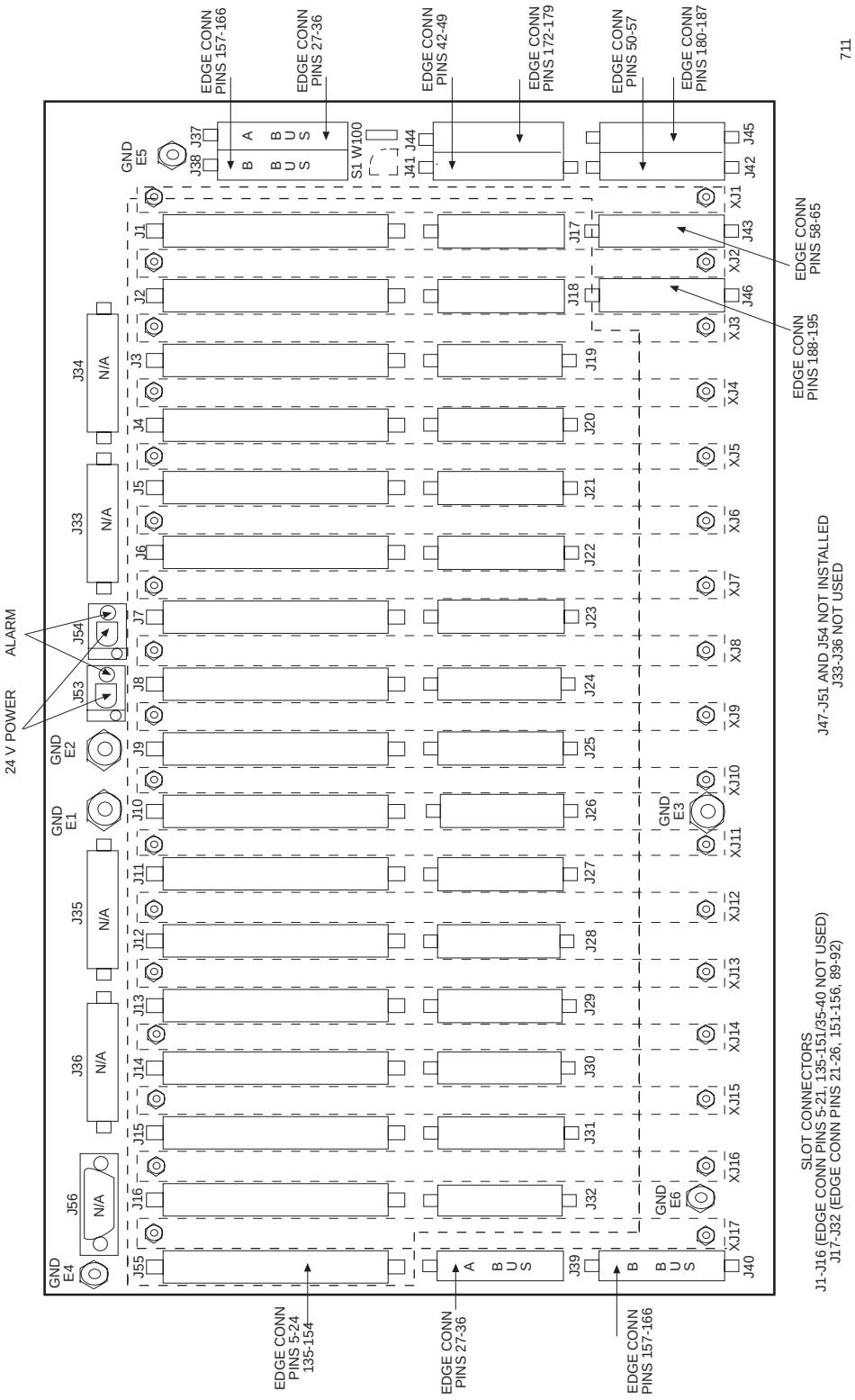


***Figure 4-12. Rear View of Card Cage Backplane***

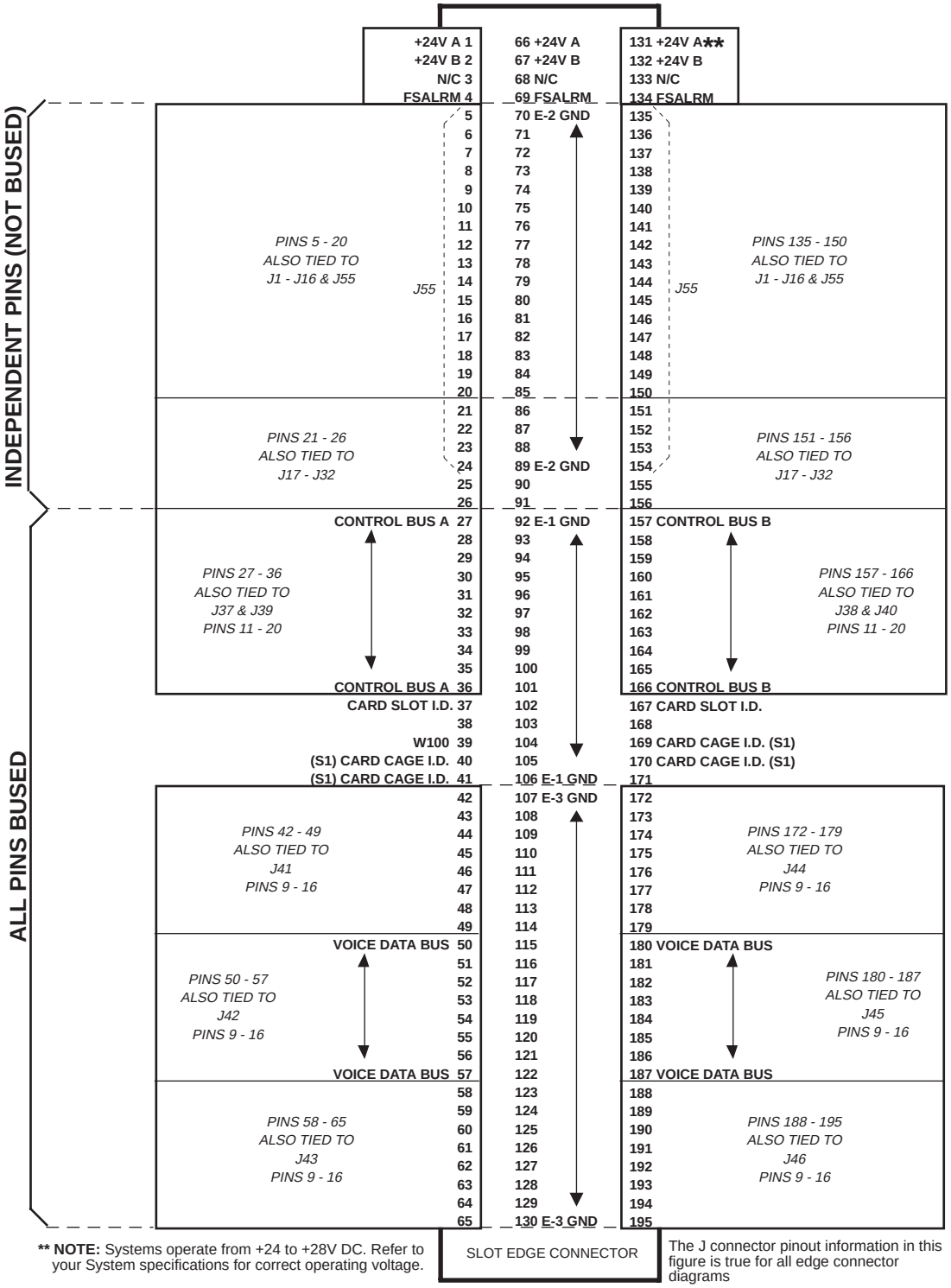


*Figure 4-13. Backplane Edge Connector Configuration*

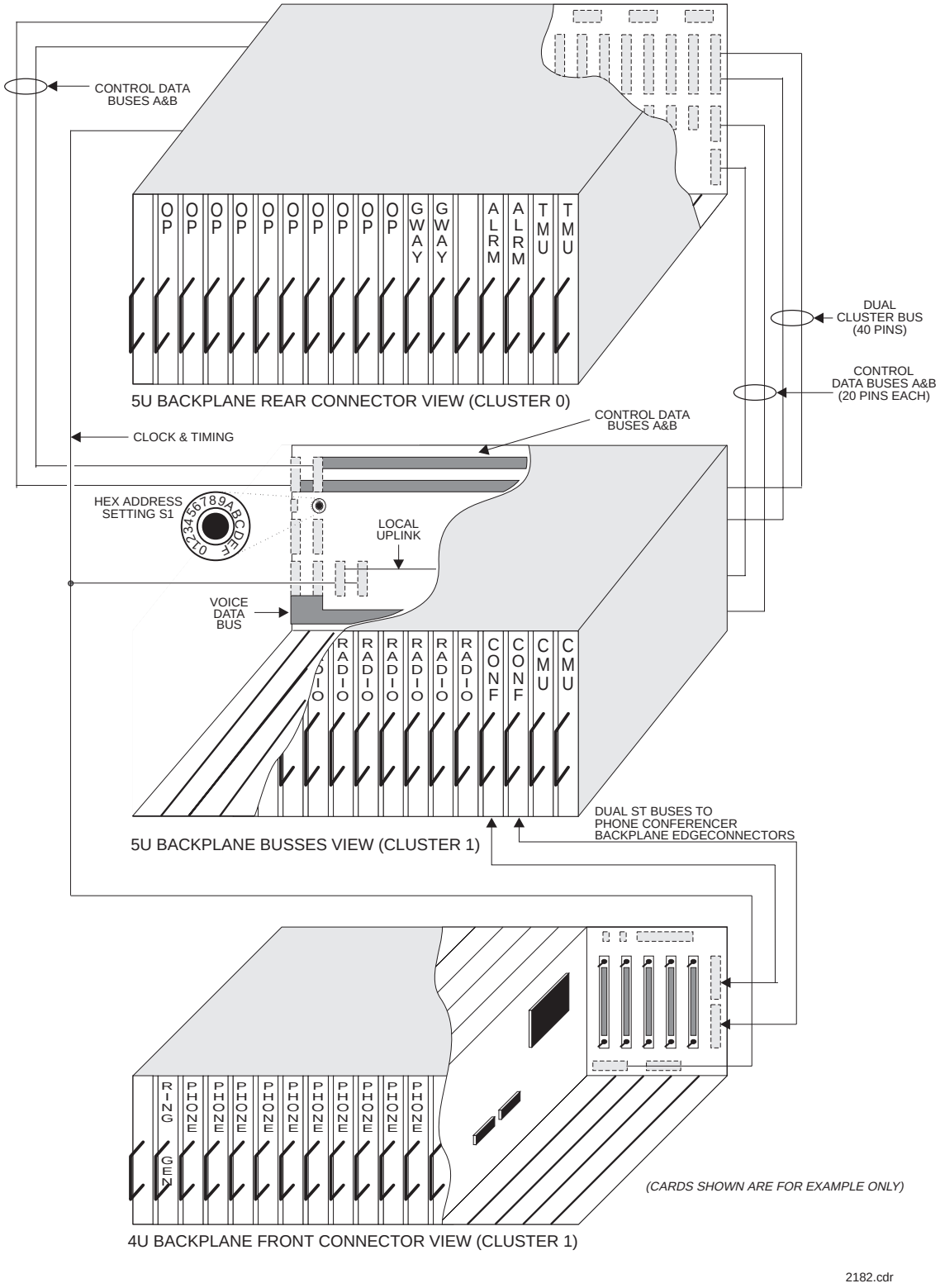


***Figure 4-14. Rear View of Backplane Buses and Bus Interconnection***

in the diagram. Cluster local up-links are resident on each backplane as are cluster down-links (voice data buses). The cluster bus connecting the CMUs in each cluster to the system TMUs is externally cabled as shown. Note that in some systems, not all card cages contain CMUs. In clusters containing multiple card cages, the cluster up-link and voice data buses are ribbon-cabled to an associated card cage containing a CMU. This allows both card cages to share the same cluster up-link and the same voice data bus (down-link) through one MUX unit.

### 4.1.10 Telephone Card Cage

The telephone interface cards fit into a 4U height card cage to increase the number of card cages installed in the racks. The card cage holds up to 16 telephone cards. W1 and S1 function in the same manner as for the 5U card cages. **Figure 4-15** illustrates the 4U card cage backplane. The telephone lines from the demarc connect directly to the backplane; there is no distribution panel required. There are no voice and control data buses on the backplane.

The telephone interface cards plug into the slot edge connectors J1 through J16. All slots of the 4U cardcage accept 4U, 2-, 4-, 6-, or 8-wire telephone interface cards.

J24 through J25 permit direct demarc connection at the backplane.

If the card cage contains only 2-wire cards, or 2-wire and 4-wire cards as defined in the illustration, a single cable, at J24, may be used to connect the card cage to the demarc. Alternatively, if the card cage contains a mix of 2-, 4-, 6- and 8-wire cards, J25 through J27 may be used. Each of these connectors serves a group of slots as defined in the illustration.

If the interface cards served by a single Phone Conferencer pair occupy more than one 4U card cage, one card cage must have an even address and the other an odd address.

In addition to telephone interface cards, a 4U Ring Generator can also be installed in the card cage in slot 16. A dual ring bus on the backplane makes the Ring Generator output available to any card that requires it. The ring voltage is also available at J21 and J22 for cabling to other telephone card cages. If the system uses an external ring voltage source, its output is connected at J21 and J22. Each connector serves one ring bus.

J21 and J22 may also be used to connect an external -48 VDC telephone line battery source to a second pair of buses on the backplane that conduct the voltage to the cards

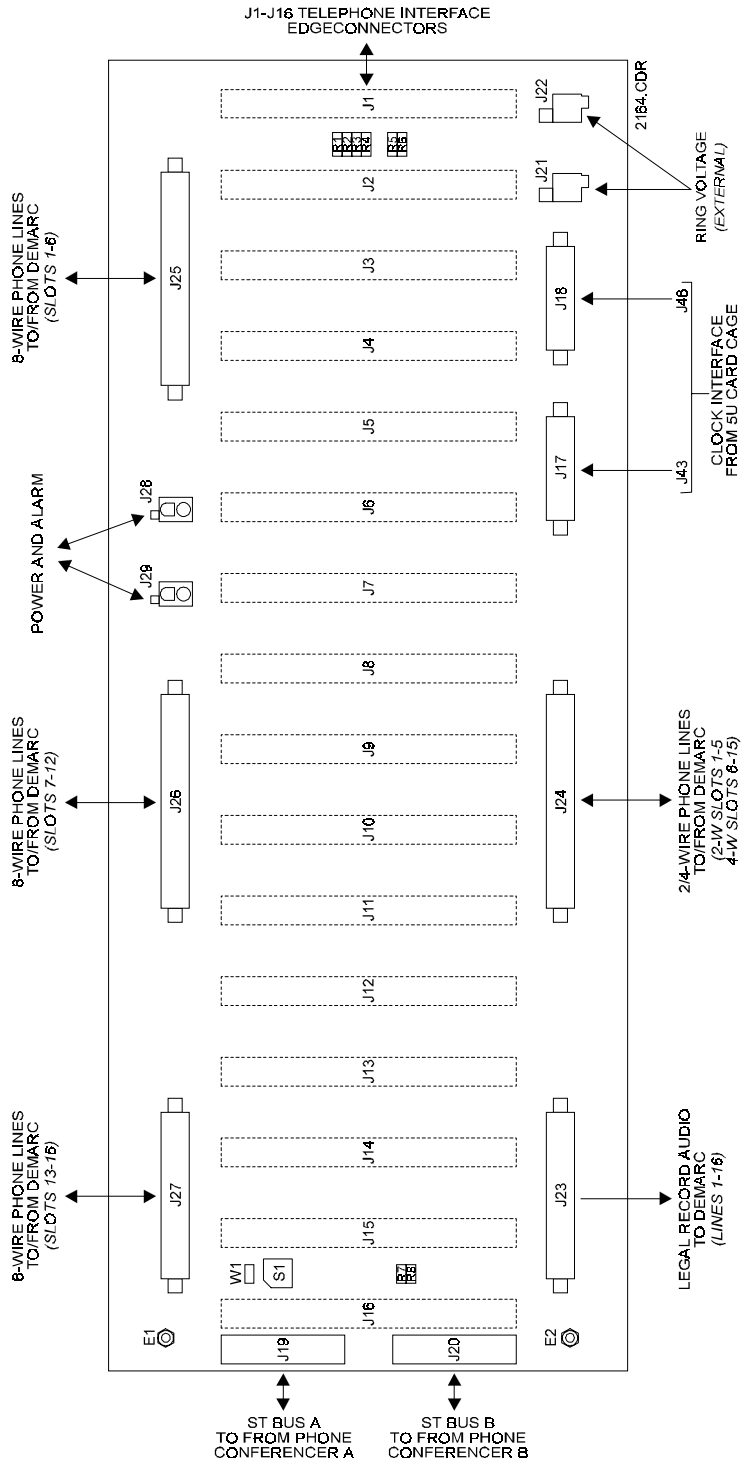


*Figure 4-15. Telephone Card Cage Backplane Rear View*

that require it. Each connector serves one bus. If the card cage contains a Ring Generator card, the card supplies -48 VDC telephone line battery voltage directly to the buses. The -48 VDC output from the Ring Generator is also available at J21 and J22 for cabling to other telephone card cages

J19 and J20 connect to the backplane edge connectors of two Phone Conferencers that process the ST I/O of the Telephone Interface cards. Each connector serves one ST bus.

Each interface card provides a record audio signal to J23 that is connected to the legal recorder demarc.

J28 and J29 connect power and alarm cabling as on the 5U card cage.

### 4.1.11 Record Audio

All voice entering and leaving the system can be recorded by a multiple channel voice recorder. Transmit and receive voice from the telephone interfaces is available at a connector on the telephone card cage backplane. Transmit and receive radio voice is available at the radio distribution panel.

Audio at the position is picked off in the analog circuitry of the Speaker Module and Jackbox Interface card. It is immediately digitized and fed to the Position Audio Board where it is summed. The Position Audio Board outputs the record audio as an analog signal over lines contained in the cable to the central rack. At the central rack, it is available at the Operator Distribution Panels

## 4.2 ETVS SYSTEM ARCHITECTURE

The information provided in this paragraph assumes knowledge of paragraphs 1.1 through 1.6 and 4.1. The system description provided in 4.1 is applicable to all basic systems and their subsystems.

The modular design of ETVS system equipment provides customers with considerable latitude in configuring systems that meet specific requirements at particular locations. To make ordering easier, there are four basic rack configurations available. **Table 4-3** lists the basic systems and their capacities.

***Table 4-3. ETVS Basic System Configurations***

| BASIC SYSTEM | POSITION QUANTITY (Normal) | POSITION QUANTITY (Split) | SUPERVISOR POSITION QUANTITY | G/G INTERFACES | A/G INTERFACES | DOOR RELEASE INTERFACES |
|---|---|---|---|---|---|---|
| BS-1 | 4 | 5 | 1 | 12 | 12 | 2 |
| BS-2 | 6 | 10 | 2 | 20 | 20 | 2 |
| BS-3 | 20 | 20 | 4 | 50 | 50 | 3 |
| BS-4 | 50 | 30 | 4 | 100 | 100 | 4 |

Each basic configuration provides the racks and intra-rack cabling necessary to support the maximum anticipated installation as defined in the table. The customer can install the equipment required to support current needs with the assurance that the basic system chosen for the site will support expansion to the maximum anticipated level simply by adding the desired units and associated external cabling.

This manual does not describe a specific system configuration but rather describes a generic system and the individual units that make up a system. **Figure 4-16** illustrates the basic interfaces supported by the ETVS equipment. Each site-specific system consists of a combination of the interfaces presented in the illustration.

The parts list in Section 7 is generic. It lists the LRUs available for all of the basic systems plus some fuses (position fuses, etc., but not for CCAs).

All the basic systems support the following equipment groups or subsystems:

- Configuration and Control Subsystem
- Operator Subsystem
- Telephone Subsystem
- Radio Subsystem
- Position Monitoring Subsystem
- Power Distribution Subsystem
- Alarm Subsystem

The following paragraphs describe the subsystems listed above.

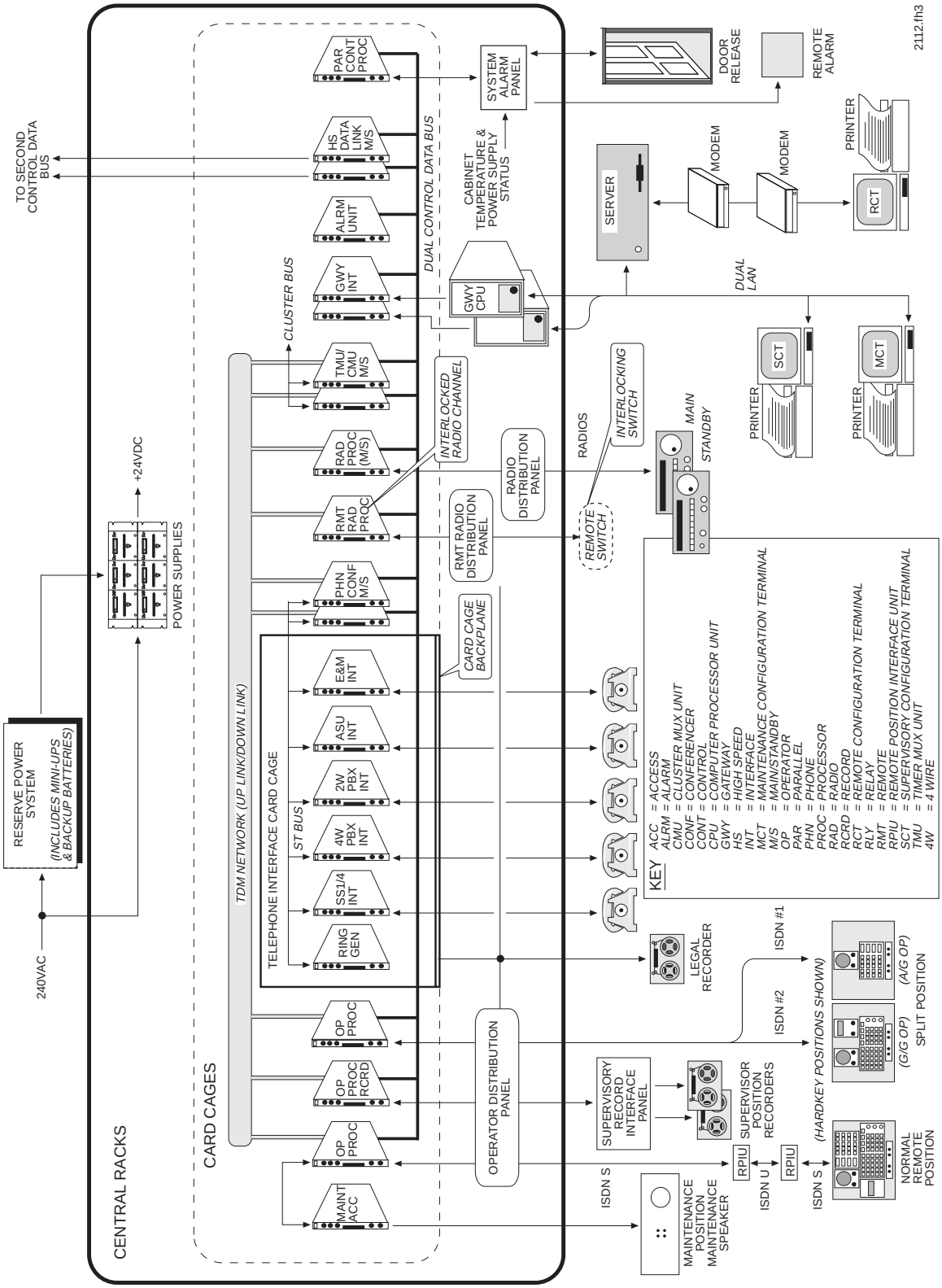


*Figure 4-16. ETVS System Interfaces Diagram*

### 4.2.1 Configuration and Control Subsystem

The Configuration and Control Subsystem, illustrated in **Figure 4-17**, contains the local and remote configuration and maintenance terminals that supervisory and maintenance personnel use to configure and monitor the system. These terminals communicate with the system's central rack over a dual Ethernet LAN. All terminals have access to both LANs. Gateway Computers located in the central rack provide the LANs port connection to the central rack equipment. Each Gateway Computer interfaces both LANs.

The Gateway computers communicate with Gateway Interface cards located in one of the central rack card cages. Each Gateway Interface card provides port connections for both central rack control data buses (A & B). Thus the dual LAN is interfaced with the dual control data bus by the Gateway Computers and Gateway Interface cards.

At system power up the SCT designates one of the Gateway computers as main and the other as standby. Thus one communication path is, by association, designated main and the other standby. Both paths are on-line at all times but main handles all communications. If main fails, the standby path assumes the communications tasks. The Gateway Interfaces read and write data from/to both control data buses. The active bus handles the message.

A FIFO card installed in the Gateway Computer expansion slots manages data communications between the Gateway Interface and the Gateway Computer's internal data bus. This card is part of the Gateway Computer LRU.

The top left of **Figure 4-17** shows a pair of High-Speed Data Links sitting on the control data bus. One for bus A and one for bus B. In large systems it is necessary to segment the control data bus to distribute the port load on the bus (70 to 80 processor cards is the maximum the bus can support). By placing a High-Speed Data Link card on each bus (A & B) and providing a data link to a second pair of High-Speed Data Link cards connected to a second dual bus segment (A & B), two electrically isolated bus segments are available to handle the port load. Communication between the bus segments is provided by the data link between High-Speed Data Link cards. The bus can be broken into further segments by adding a second High-Speed Data link pair to the first bus segment.

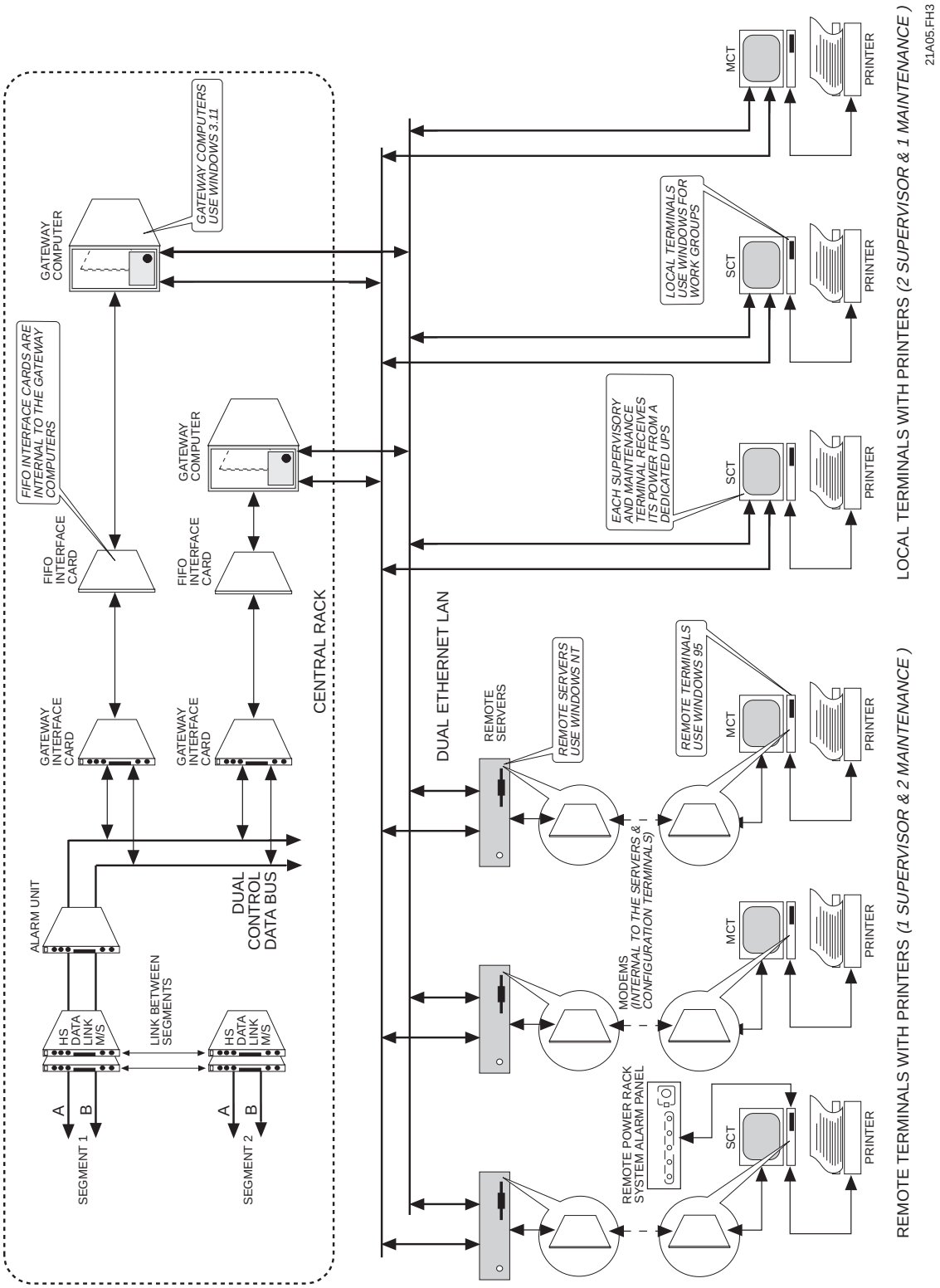


*Figure 4-17. Configuration and Control Subsystem Block Diagram*

To support remote supervision of the system, servers, resident on the LAN, provide communication with remote configuration terminals via modems. The modems are installed in the remote server and configuration terminal at each end of the modem link. Each remote configuration terminal requires a remote server interface to the LAN.

Software installed on each terminal enables the supervisory personnel to execute system configuration changes or perform maintenance activities. Each SCT, MCT, and Remote Server is a line replaceable unit (LRU) that is delivered with the following software and hardware pre-installed at the factory:

*Supervisory and Maintenance Configuration Terminals (local)*

- Windows for Work Groups 3.11
- DOS 6.22
- Hard drive
- ETVS System Configuration Software
- Ethernet cards (2) and software
- Video card
- Floppy drive

*Supervisor and Maintenance Configuration Terminals (remote)*

- Windows 95
- Hard drive
- ETVS System Configuration Software
- Video card
- Modem
- Relay Activator Card (one card, located in the remote SCT, for remote power rack System Alarm Panel messages)
- Floppy drive

Uninterruptable Power Supplies (APC-Smart UPS)

- Power Chute Plus (Windows 3.11 for Work Groups and Windows 95 versions)
- Power Chute Plus (Windows NT version)

*Remote Server*

- Windows NT
- Hard drive
- ETVS System Configuration Software
- Ethernet cards (2) and software
- Modem

All configuration terminals have printer ports, printers, and printer driver software pre-installed.

The rack-mounted Gateway Computers are LRUs that contain the following hardware and pre-installed software:

- ETVS Software; gateway utilities
- Ethernet cards (2) and software
- FIFO card
- Hard drive
- Floppy drive
- Windows for Work Groups 3.11
- DOS 6.22

When a Gateway Computer is replaced, the replacement Gateway Computer becomes the backup Gateway. When the replacement Gateway Computer first powers up, it reads the current configuration map from the active Gateway. During this operation, a message, displayed at the SCT, informs the user that the two units are synchronizing.

The central rack Alarm Unit (CCA) resides on two control data buses (CDB). This permits maintenance personnel to monitor both buses.

For remote alarm reporting, the remote SCT accepts alarm data from the remote power rack System Alarm Panel via a Relay Actuator Card interface. This data is then sent to all configuration terminals over the LAN.

### 4.2.2 Operator Subsystem

The peripheral operator position equipment provides the communications control interface to the system. Its modular design permits easy installation in purpose-built position consoles.

***Position Types.*** System installations can include the following types of position equipment:

- *Type 1 Positions.* Back-lighted push button (hardkey) panels for high activity areas with normal-to-high ambient light levels.

  Type 1 positions take two forms: one with an Integrated Basic Operator Panel (IBOP) and the other with a card file and a mini-BOP (MBOP). At locations with limited console space, the mini-BOP configuration allows for a more compact panel arrangement because the card file contains the position signal processing circuitry normally integrated into the IBOP.

- *Type 2 Positions.* Color liquid crystal displays with digital matrix touch entry devices (TEDs) for low ambient light levels.

  or

  Color LCD TEDs with higher intensity backlight for high ambient light levels.

  Both type 2 positions have card files that contain the signal processing circuitry.

***Hardkey Position Units Interface***. An Inter-integrated Communications ($I^2C$) bus links the hardkey position IA Module, Radio Selectors, and DA Selectors to the position electronics. At IBOP positions, the $I^2C$ bus connects the units to the IBOP and at MBOP positions it connects the units to the $I^2C$ interface card in the position card file via the MBOP. At TED positions it connects the Pot Module with the $I^2C$ Distribution Board in the line card file.

The $I^2C$ bus is a 2-wire closed-loop bus. The Pot Module at TED positions, IA Module at IBOP positions, IA Display at MBOP positions, and each position switch module, at IBOP and MBOP positions, are tied to this bus and have a unique address on the bus. Each switch module can operate as a transmitter and a receiver. Microcontrollers, located in each module, control bus traffic.

At IBOP positions, the IBOP Position Audio Board processes $I^2C$ bus messages to and from the central rack equipment. At TED and MBOP positions, the $I^2C$ Distribution Board processes these messages.

***Normal And Split Positions.*** Normal and split configurations are available for type 1 and type 2 positions as follows:

- *Normal Positions* control both air-to-ground (A/G) and ground-to-ground (G/G) communications from a single TED or set of hardkey panels. One operator controls a normal position.
- *Split Positions* possess two TEDs or a split hardkey panel: one TED controls A/G traffic and the other G/G traffic. Split positions can also be switched to combined mode so that all traffic is controlled from one of the TEDs or from the set of hardkey panel. Two operators control a split position in split mode. One handles A/G communications and the other G/G communications. In non-split mode, one operator controls the position.

**Figure 4-18** illustrates typical hardkey normal and split positions.

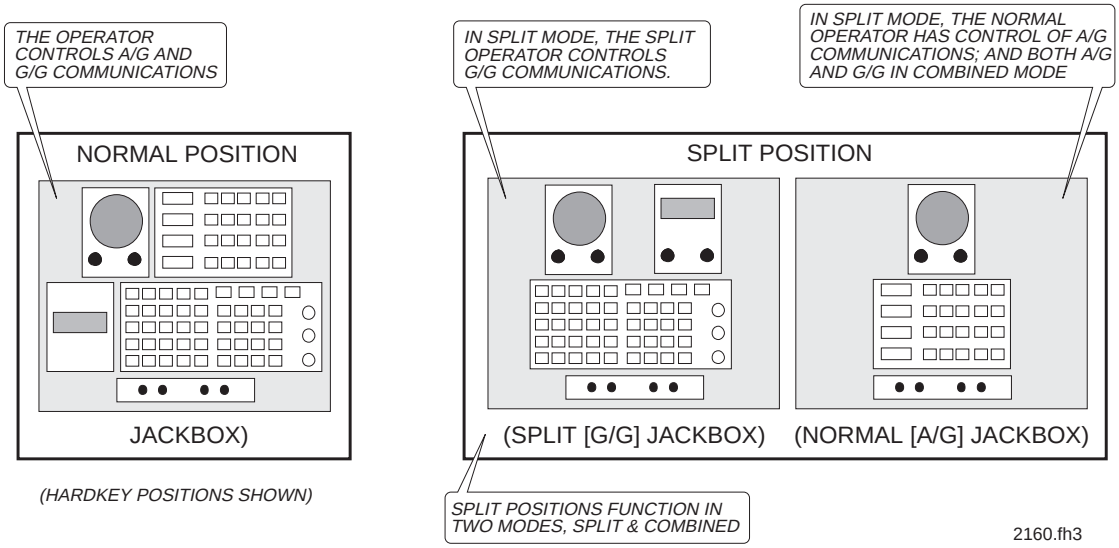


***Figure 4-18. Normal and Split Positions***

***Central Rack Interface.*** ISDN line(s) (contained in one cable) connect each position to an Operator Processor card in the central rack as follows:

- *ISDN #1 (primary).* Voice and control data for the normal position or split position A/G operator
- *ISDN #2 (secondary).* Voice data for the split, G/G, operator (if configured)

ISDN line drivers at the central rack and at the positions permit up to a 500 foot cable length between the positions and central rack.

**Figure 4-19** provides a simplified illustration of the subsystem.

***Supervisor Positions.*** Supervisor positions can be of the TED or hard key types. They use the same equipment modules as standard positions but have, in addition, two tape recorders, a supervisory tape recorder interface, and an SCT.

***Maintenance Positions.*** Maintenance positions are similar to supervisory positions but do not have supervisory recorder interfaces. The rack-mounted maintenance position uses either a TED LCD (TRACON) or hardkey modules with an IBOP.

***Local and Remote Positions.*** Standard, supervisor, and maintenance positions of types 1 and 2 can be installed local or remote to the central rack. Local positions are connected to the central rack via a cable of not more than 500 feet and use the rack power supplies. Remote positions can be connected to the central rack by a cable up to 15,000 feet long. Auxiliary power supplies, located at the remote positions, provide the necessary power.

Remote Position Interface Units (RPIUs), installed at each end of an ISDN U link, permit a cable length of up to 15,000 feet. The RPIU interfaces the cable to the central rack at the local end and the position at the remote end. The RPIU comes in two versions: one to interface normal positions, and one to interface split positions. The RPIUs also interface legal record audio from the remote position to the central rack. The record audio interface is analog.

Remote positions equipped with configuration terminals use a modem link to connect the terminal with a remote file server that provides access to the LAN.

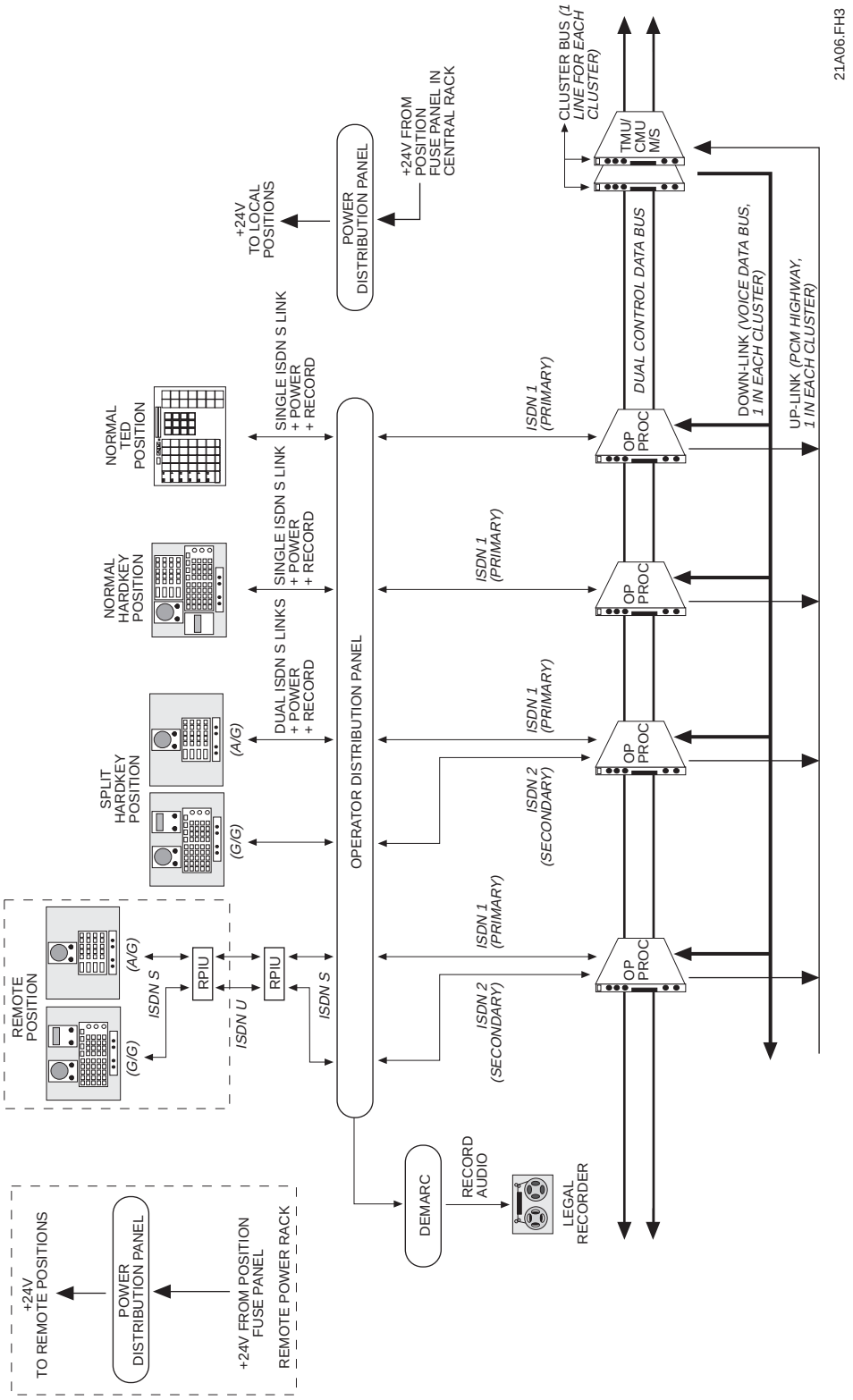


*Figure 4-19. Operator Subsystem Block Diagram*

**Figures 4-20, 4-21**, and **4-22** illustrate typical local and remote interfaces for type 1 and type 2 positions.

***Power.*** Power supplies located in the central rack power the positions cabled directly to the central rack. Auxiliary power supplies power remote positions not directly cabled to the central rack. These supplies are co-located with the remote positions they power.

Refer to Section 3 for illustrations and descriptions of the operator control panels and displays supplied with the TED and hardkey positions. Paragraphs 5.28.2 and 5.28.3 provides functional descriptions of the hardkey position modules and paragraph 5.28.1 of the TED position modules.

***Legal Record.*** All audio activity at each position is returned to the operator distribution panels as an analog signal. The analog audio lines from the positions are part of the same cables that carry the ISDN links between the positions and the central rack. The record audio lines of all the positions served by the distribution panel terminate at a connector that ports the record signals to the legal recorder. Record audio is picked off at the jackbox interface or the position speaker, depending on the audio routing selected at the position.

***Supervisory Record.*** The supervisor position has facilities for monitoring selected positions and recording the monitored activity. For a description of this feature, refer to Position Monitoring Subsystem.

### 4.2.3 Telephone Subsystem

The Telephone Subsystem provides system interface to all telephone communications. **Figure 4-23** presents a block diagram of the subsystem. The subsystem contains Telephone Interface Cards to interface the following types of telephone lines:

- 2-wire PBX
- 4-wire PBX
- ASU
- E&M
- SS-1 / SS-4

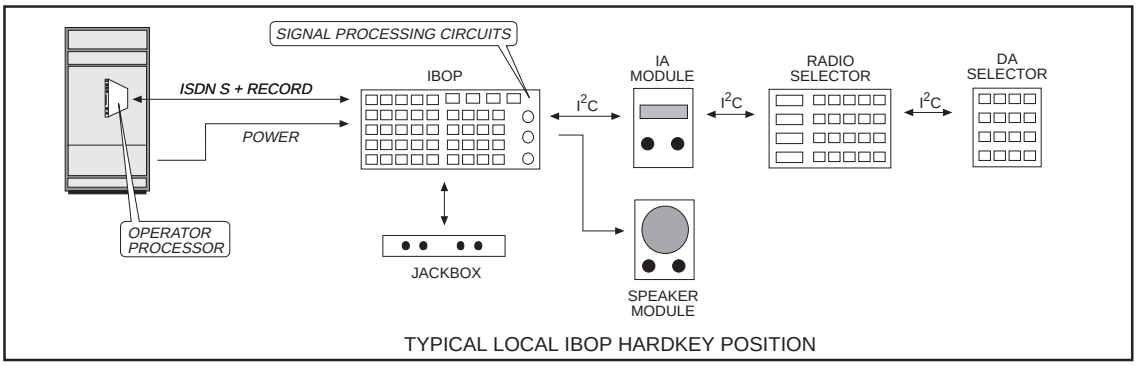


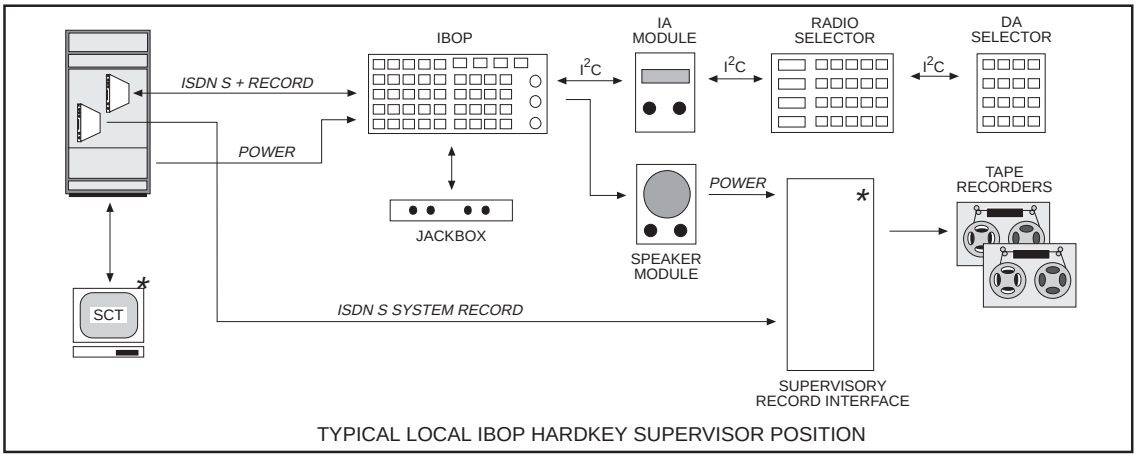


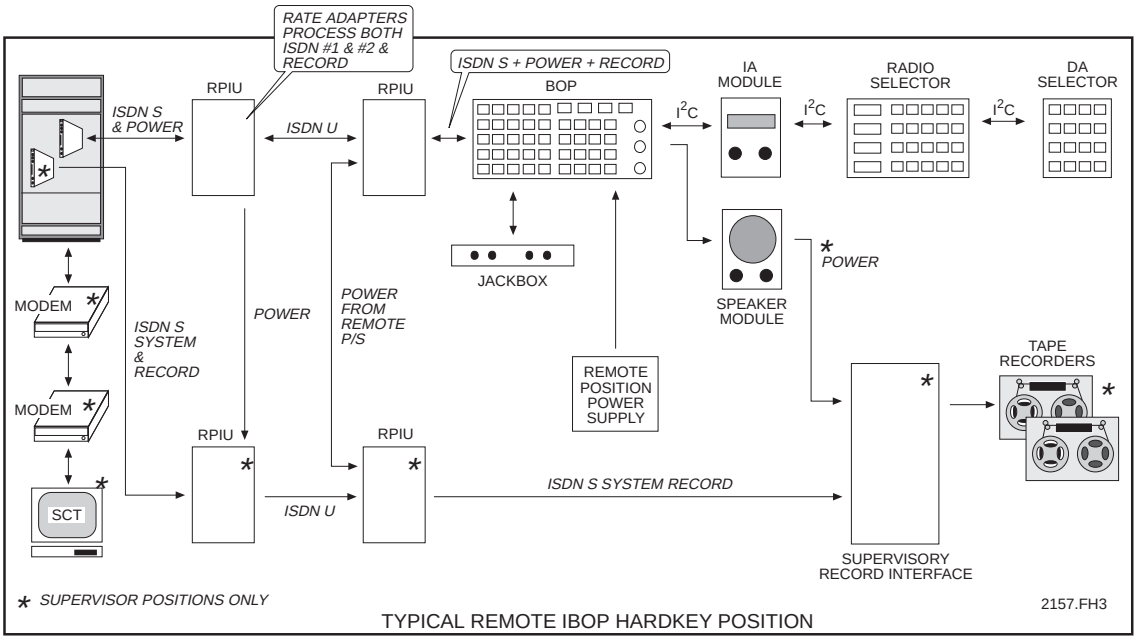


ISDN INCLUDES ISDN #1 (& ISDN #2 AT SPLIT POSITIONS)

***Figure 4-20. Typical Local and Remote Hardkey IBOP Position Installations***

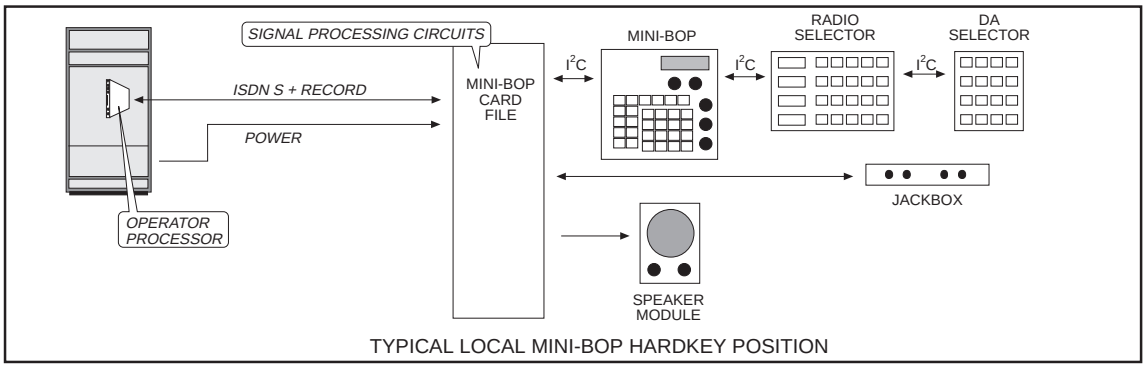


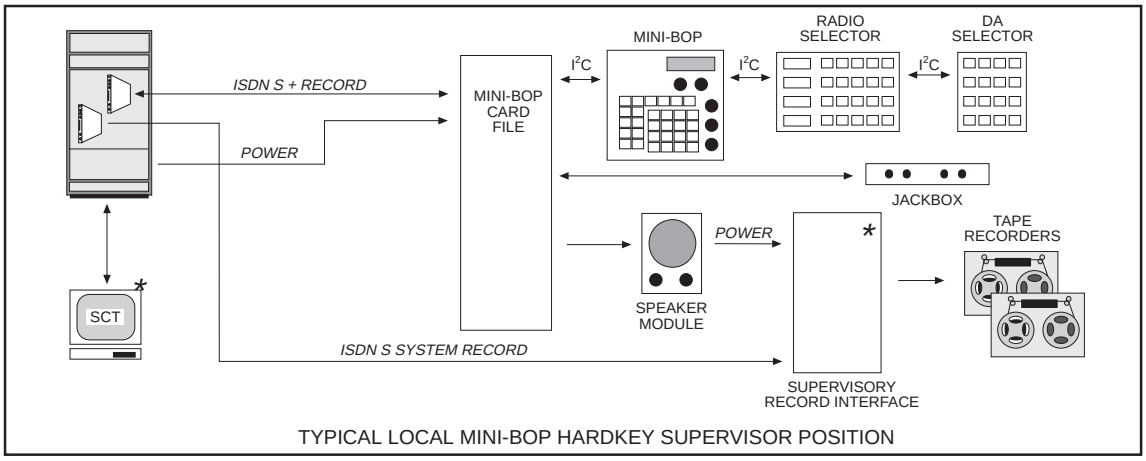


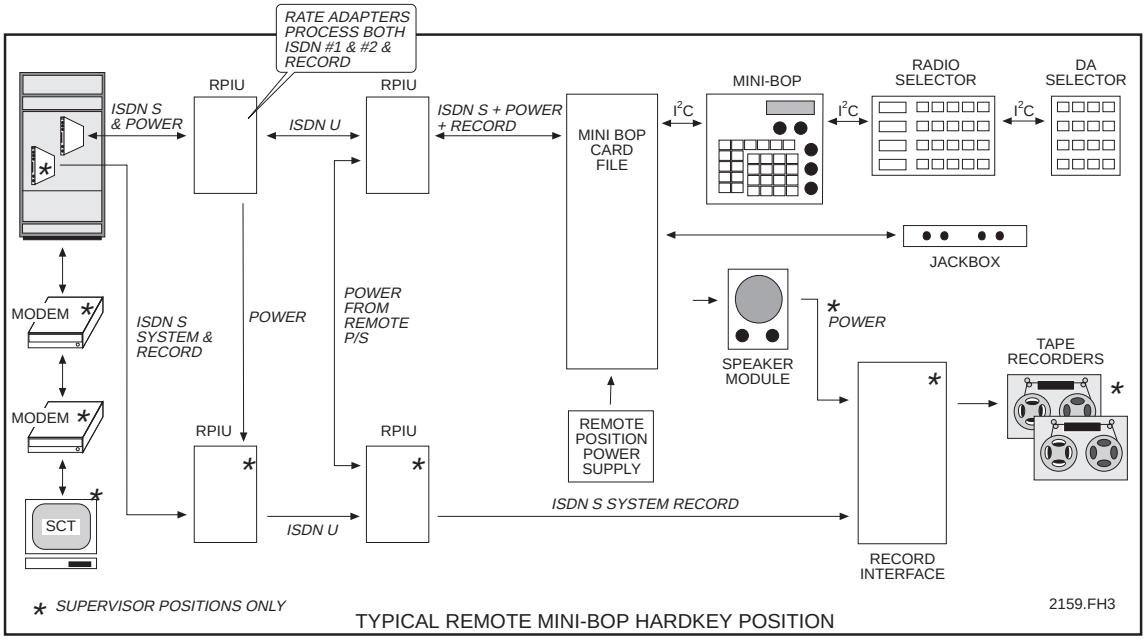


*ISDN INCLUDES ISDN #1 (& ISDN #2 AT SPLIT POSITIONS)*

***Figure 4-21. Typical Local and Remote Hardkey Mini BOP Position Installations***

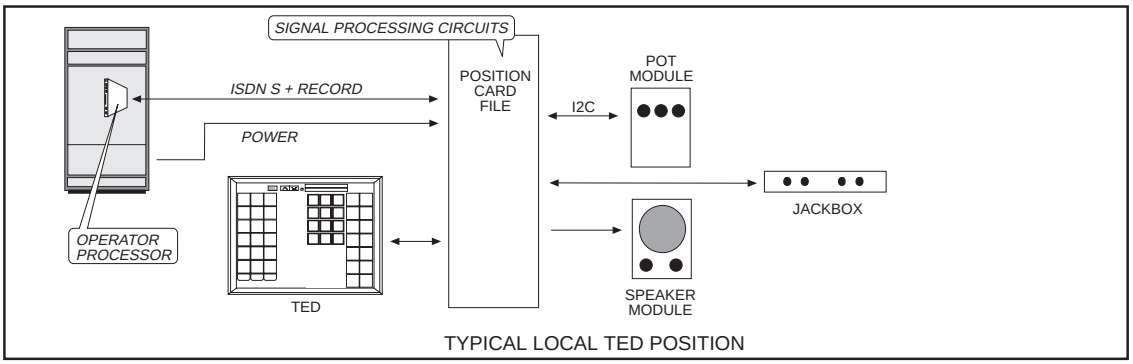


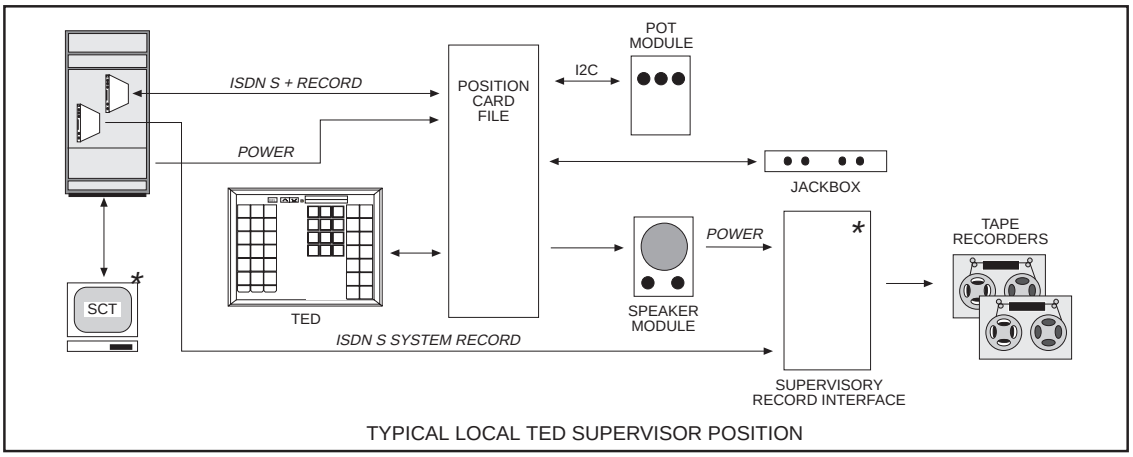


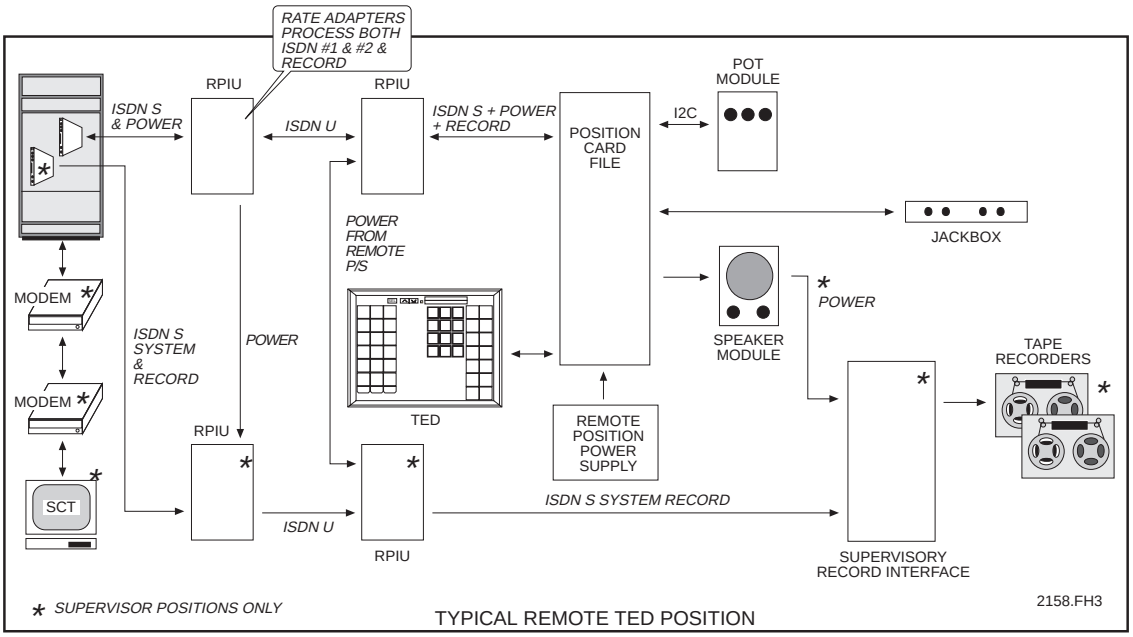


*ISDN INCLUDES ISDN #1 (& ISDN #2 AT SPLIT POSITIONS)*

***Figure 4-22. Typical Local and Remote TED Position Installations***

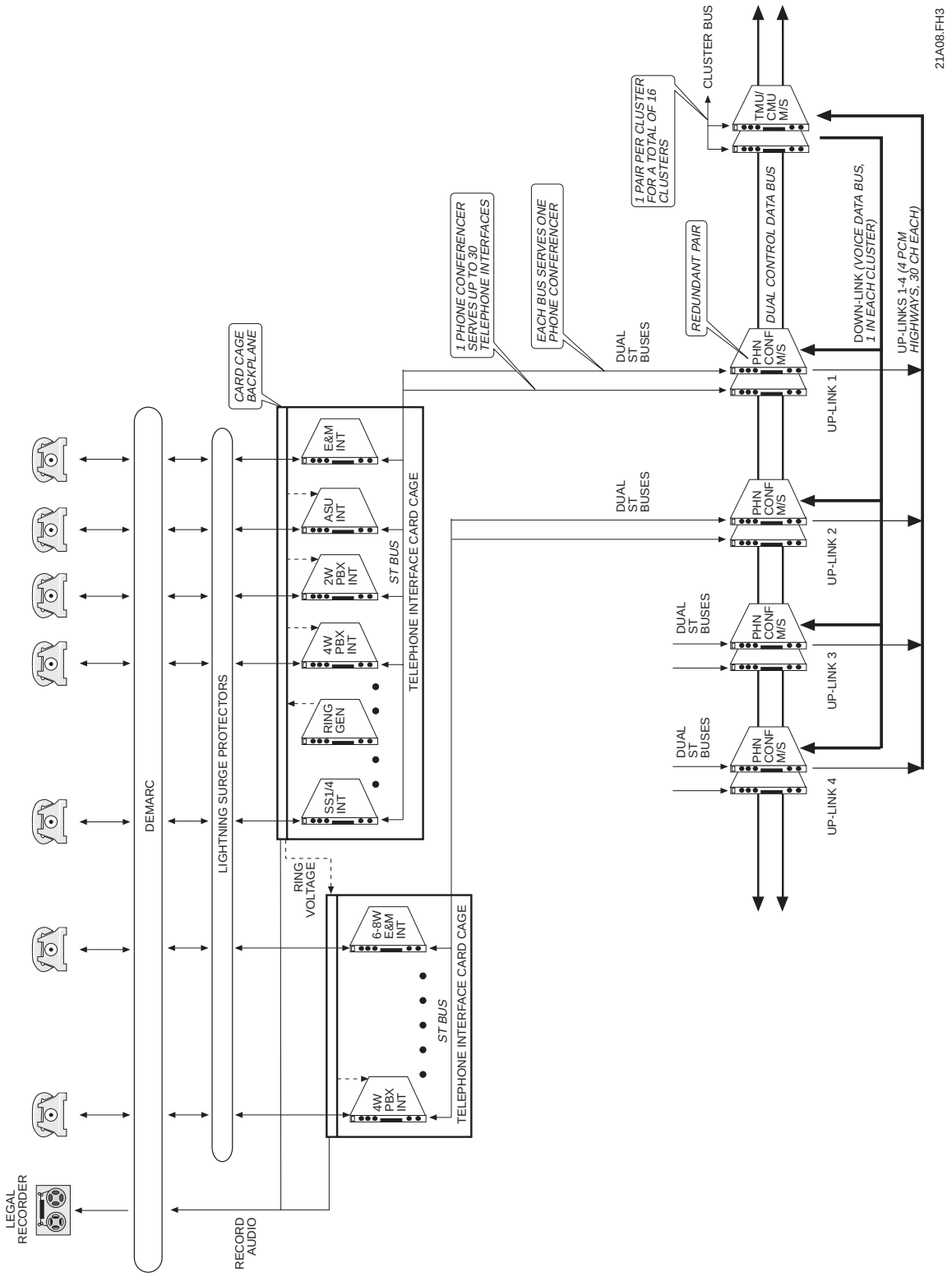


*Figure 4-23. Telephone Subsystem Block Diagram*

The type of cards installed in your system depends on your site configuration. The interface cards for the above line types are 4U reduced height cards installed in a 4U card cage. A dual differential ST-bus links the interface cards to a redundant Phone Conferencer pair located in a standard card height (5U) card cage. A Phone conferencer can serve up to 30 telephone interfaces, or one cluster. A dual up-link feeds the 30 channels of data to a TMU/CMU allocated to the cluster. The TMU/CMU design supports up to four such up-links; therefore, three additional Phone Conferencers can be cabled to the TMU/CMU. Thus one TMU/CMU can multiplex 120 telephone channels onto 4 clusters of the cluster bus.

***Ring Voltage.*** A Ring Generator, installed in one of the telephone interface card cages, provides ring voltage to the telephone cards that require it. A cable interconnects this voltage to a second card cage. It reaches the appropriate cards via their backplane edge connectors.

***Lightning Surge Protectors.*** Secondary lightning protection, installed in the central rack, grounds any transients on the phone lines to earth ground. These devices are also referred to as Transient Surge Protectors. This is optional equipment and may not be installed at your site. Refer to site-specific documentation.

***Legal Record.*** Each telephone interface card supplies an analog record output of all audio activity processed by the card to the backplane of the telephone card cage. From the backplane, it is cabled to the legal recorders via the demarc.

### 4.2.4 Radio Subsystem

The Radio Subsystem ports all air-to-ground communications to the system. It supports two types of interface. One in which the radio equipment is local to the central rack site and one in which the radio equipment is remote to the central rack site. A block diagram of the subsystem appears in **Figure 4-24**.

***Local Radio Equipment Interface and Control.*** Radio channels for local radio equipment interface with the central rack equipment through Radio Processor cards. These cards serve single transmitters and receivers or main and standby transmitter and receiver pairs. Each radio frequency may be supported by two Radio Processor cards that provide redundancy to the radio channel processing. Switch-over between processors is transparent to the operator. An RS-232 link passes card status and switch-over control between the two cards. Operators control main/standby transmitter and receiver switch-over from the positions.

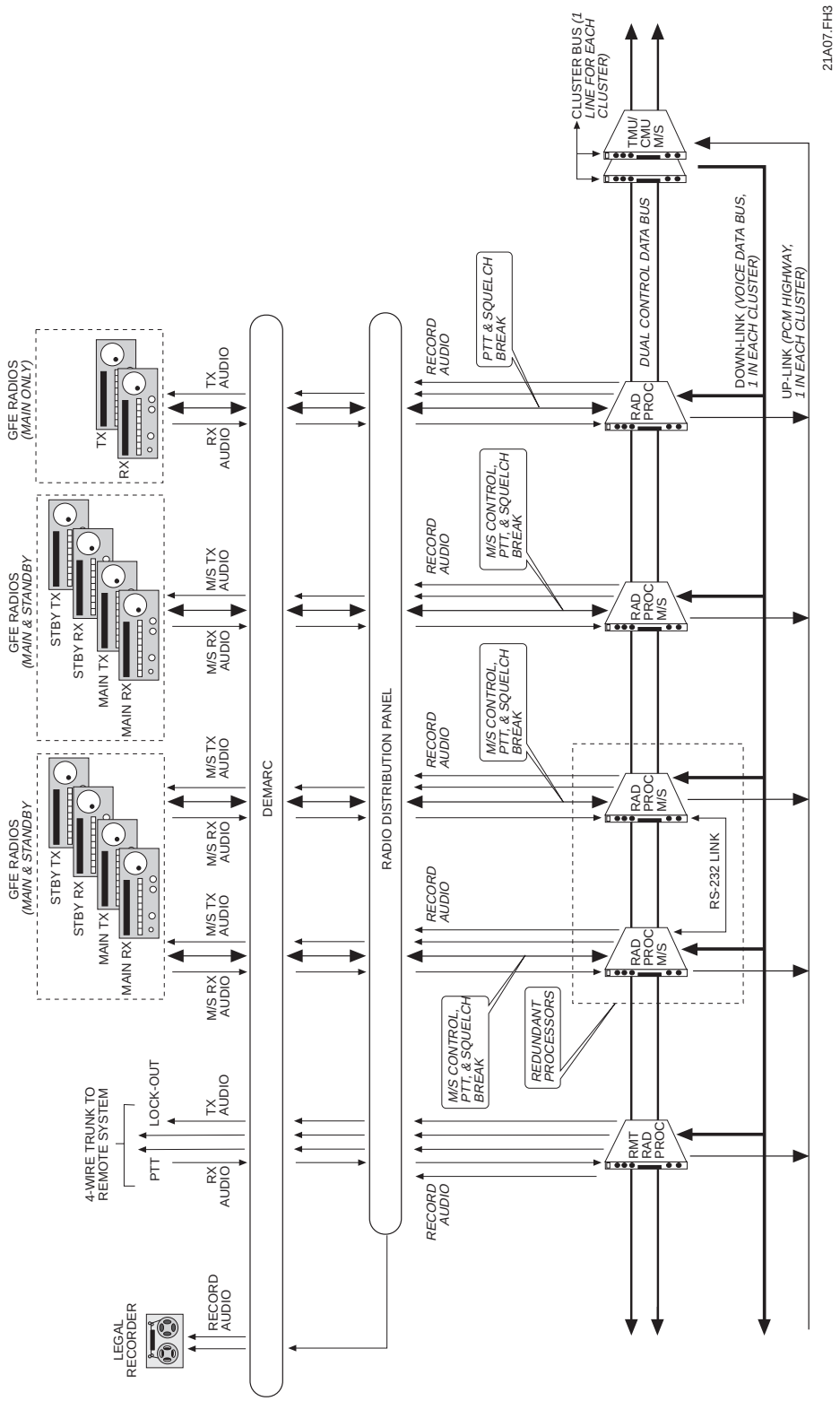


*Figure 4-24. Radio Subsystem Block Diagram*

***Remote Radio Equipment Interface and Control.*** Radio equipment remote to the central rack may be accessed via a remote radio interface. A Remote Radio Processor card provides an E&M-like telephone trunk link for the radio channel. Each trunk can only serve one transmitter and receiver and there is no provision for main/standby switching between radio equipment across this link.

***Legal Record.*** Each Radio Processor card supplies an analog record output of all audio activity processed by the card to the Radio Distribution Panel. From the distribution panel it is cabled to the legal recorders via the demarc.

### 4.2.5 Position Monitoring Subsystem

The supervisors and maintenance personnel can monitor position audio activity. The supervisor can record this activity at recorders located at the supervisory positions. Refer to **Figure 4-25** for a block diagram.

***Supervisory Record.*** In addition to the legal record element, the supervisor can record voice activity at selected positions. Two locally installed recorders at the supervisor positions record this activity. Voice data from the selected position reaches the supervisor's recorders via an Operator Processor dedicated to providing record audio to the supervisor's position. An ISDN port outputs the selected position audio to a Supervisory Record Interface unit located at the supervisor's position. This unit converts the ISDN signal to analog voice and ports it to the position recorders. If the supervisor position is at a remote location, RPIUs and an ISDN(U) link connect the output to the Supervisory Record Interface. The position to be monitored must be configured at the SCT. Refer to the SCT User's Manual to set up Supervisory Record.

***Maintenance Access.*** A Maintenance Access card , linked to an Operator Processor card via an ST-bus, provides an interface to front panel jacks through which the technician can patch position audio to the Maintenance Speaker Panel. This particular patch is available when position monitoring (see below) is set up at the SCT; however, audio from any radio processor or telephone interface card can be patched to the Maintenance Speaker Panel.

***Position Monitoring.*** Using the SCT, the technician can select an operator position for monitoring at the maintenance position headset or speaker and at the front panel jacks of the Maintenance Access card. The selected position remains on-line. Refer to the SCT manual to set up position monitoring.

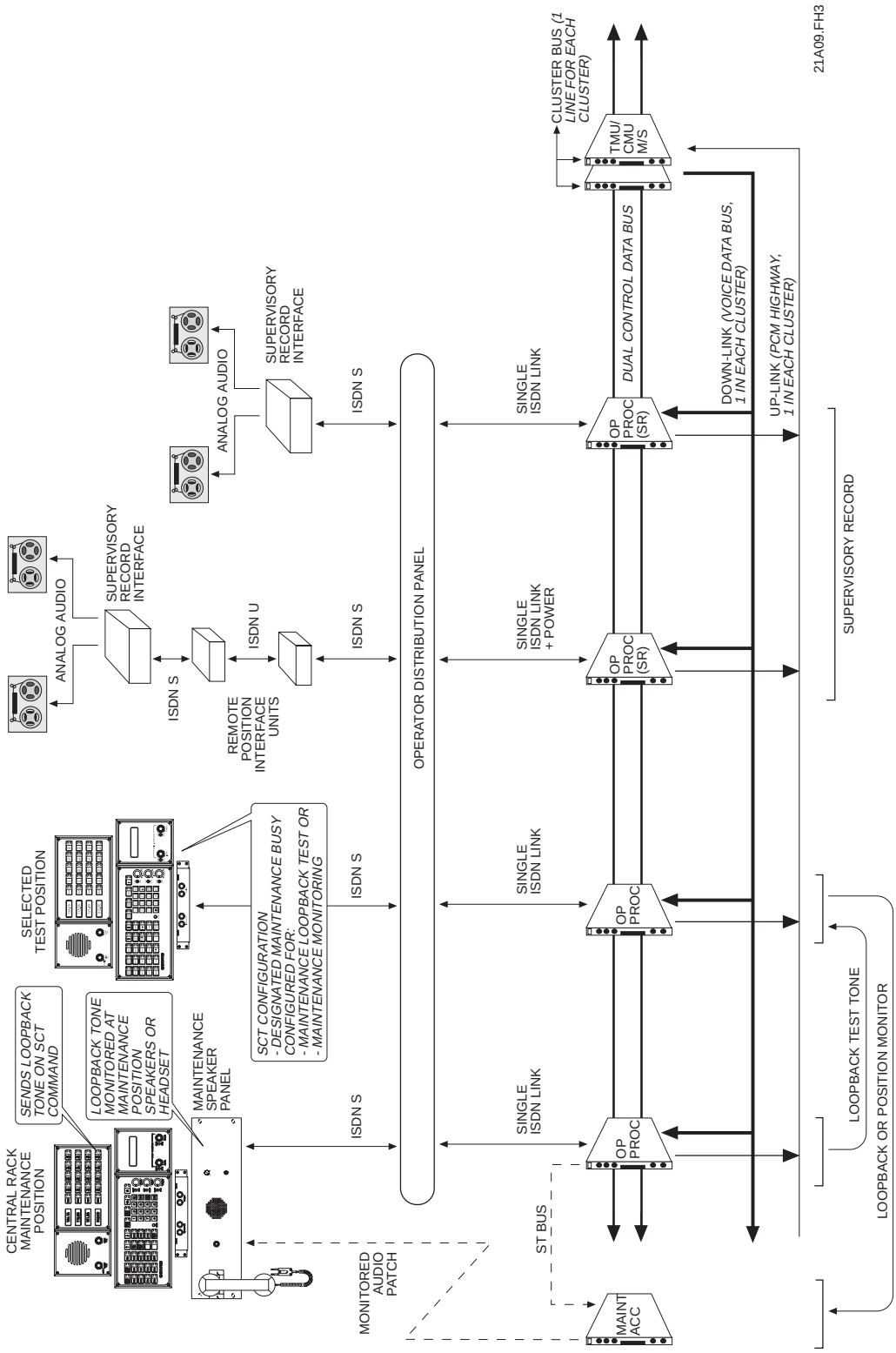


*Figure 4-25. Position Monitoring Subsystem Block Diagram*

***Position Loopback (Diagnostics).*** By using the SCT to establish a loopback test path from the maintenance position via a specified position, the technician can verify the integrity of the digital and analog audio paths in the loop. The test software instructs the maintenance position to transmit a tone through the loop to verify the operation of the Operator Processor cards, the multiplexing process and the electronics of the selected position. The test position is off-line during the loopback test. Refer to Section 6 for the diagnostics loopback procedure.

### 4.2.6 Power Distribution Subsystem

There are two types of power subsystems: one in the central rack and one in the remote power rack required to power remote positions. Both power subsystems contain a power supply rack adapter with two or more power supply modules installed, depending on the size of the basic system and the number of remote positions installed. **Figure 4-26** illustrates the central rack power distribution scheme and **Figure 4-27** the remote power rack scheme.

***Central Rack Power Distribution***. The central rack power distribution scheme includes power supplies and batteries, two Low-Voltage (Load) Disconnect Panels, one Low-Voltage (Battery) Disconnect Panel, Position Fuse panels, and Operator Power Distribution Panels. The number of position fuse panels and operator power distribution panels depends on the size of the system.

ETVS central rack equipment operates from a mains voltage of 240 VAC (±15%), 60 Hz (±6%) single phase via system power supplies producing 27.5 VDC at 125A each. **Table 4-4** lists the power supply requirements for each basic system.

***Table 4-4. Basic System Power Supply Requirements***

| BASIC SYSTEM | POWER SUPPLY QUANTITY (125A) |
|---|---|
| BS-1 | 2 |
| BS-2 | 2 |
| BS-3 | 3 |
| BS-4 | 4 |

(Power supply quantities include redundancy requirements)

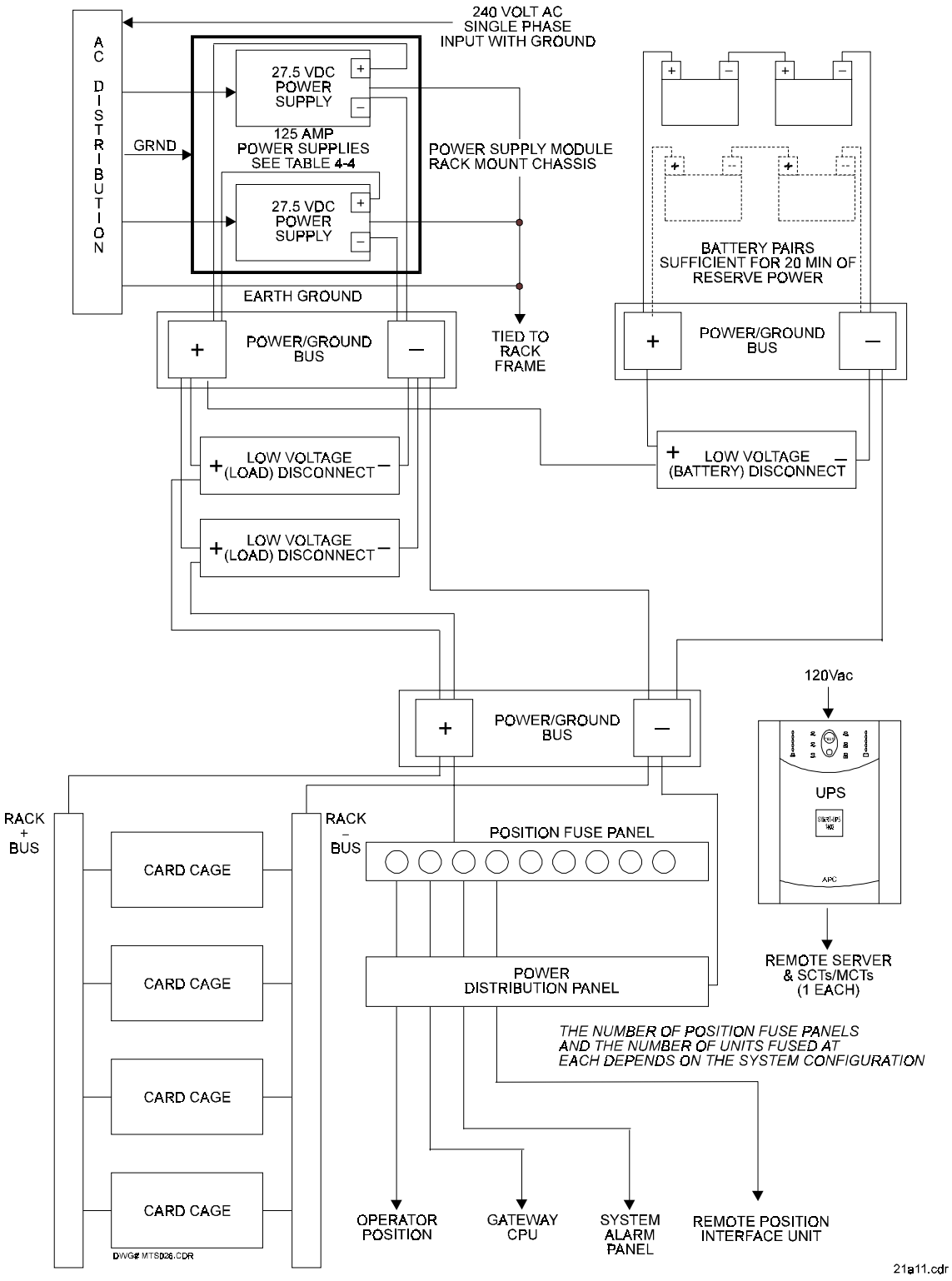


***Figure 4-26. Central Rack Power Distribution Subsystem Block Diagram***

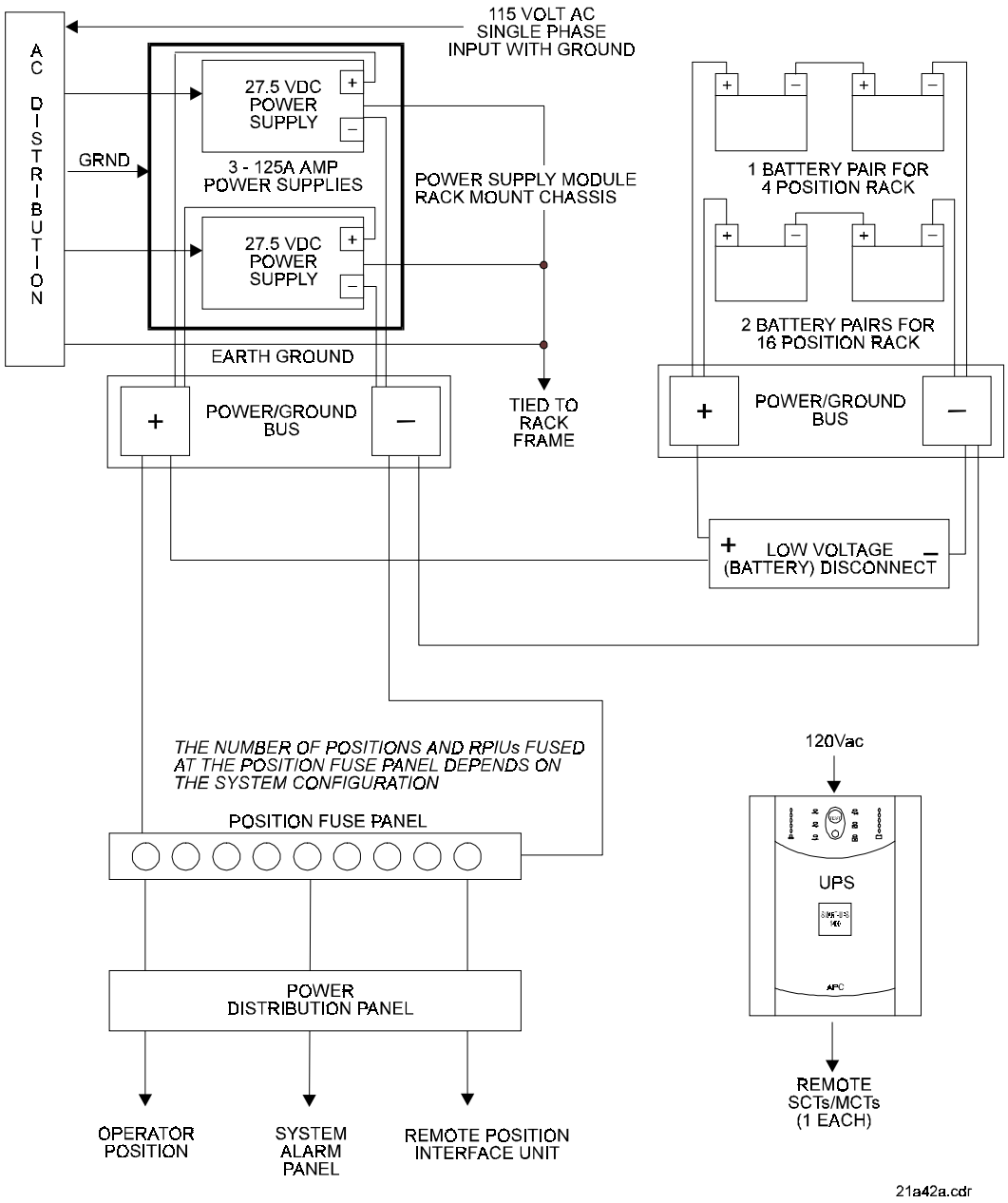


***Figure 4-27. Remote Power Rack***

The central rack power supply subsystem has a battery bank of a sufficient number of batteries to power the basic system for up to 20 minutes on reserve power in case of a main power failure.

***Remote Power Rack.*** Some installations include remotely located operator positions. These positions receive power from an independent power rack at the position location. Two power racks are available: one to power up to 4 positions and one to power up to 16. A single battery pair installed in the power rack provides backup power to the positions for up to 20 minutes. The power racks contain power supplies and batteries, a Low-Voltage (Battery) Disconnect Panel, fuse panels for 16 positions, and a power distribution panel for 16 positions.

Each remote power rack power supply module operates on a mains voltage of 120 VAC, 60 Hz single phase and produces an output of 27.5 VDC at 125 amps.

***Power Supply Redundancy.*** Power supply redundancy requirements depend on the size of the system. The system software monitors power supply status and reports power supply failures at the SCT. The software issues a main power failure alarm if it determines the system no longer has sufficient redundancy in power supplies as a result of the failure.

***Reserve Power.*** In the event of a power failure, backup batteries power the central rack equipment. Each basic system has sufficient battery capacity to power a maximum installation for up to 20 minutes. Remote power racks contain a battery pair to power the remote position equipment for up to 20 minutes.

Under normal main power conditions, the power supply modules power the central rack equipment and maintain a charge on the batteries that are also connected to the load. If main power is lost, the batteries continue to power the equipment via a Low Voltage (Battery) Disconnect Panel and two Low-Voltage (Load) Disconnect Panels. As long as battery voltage remains above system cutout they continue to power the load for up to 20 minutes. If the battery voltage drops below system cutout, the Low-Voltage (Battery) Disconnect Panel disconnects the batteries from the load and the system is no longer powered.

When main power is restored, the power supply modules provide an output to the batteries via the Low Voltage (Battery) Disconnect Panel. The Low-Voltage (Load) Disconnect panels reconnect the load to the power supplies and batteries after battery charge reaches 26V. Normal system operation is automatically restored after return to Mains Power.

In the remote power racks, reserve power backup operates similarly except a single Low-Voltage (Battery) Disconnect Panel separates the load from the batteries.

The central rack power supply subsystem uses 200 and 800 amp Low-Voltage Disconnect Panels and the remote power racks use 200 amp Low-Voltage Disconnect Panels.

***Power Distribution.*** The power supply output is fed to a power and ground distribution panel at the base of each rack from which it is distributed to bus bars on each side of each rack. One bar is the plus side of the supply and the other bar the minus side. Position power is distributed to Position Fuse Panels. A fused line from the fuse panel connects to each position through a Position Power Distribution Panel.

***Uninterruptable Power Supply (UPS).*** To provide backup power two the CCS computers, portable uninterruptable power supply (UPS) units power the computers. Each UPS powers an SCT, MCT or remote server. UPS operating status is reported to the computer it powers over an RS-232 link. Monitoring software installed in the computer displays status messages on the SCT/MCT status bar. Smart-UPS Power Chute Plus software used with the “Smart UPS” unit warns users of power problems, then automatically shuts down the SCT/MCT with all vital data intact, whether user is there or not. Refer to the *SCT User Manual* **Table 2-1**.

### 4.2.7 Alarm Subsystem

As shown in **Figure 4-28**, the system alarm network includes the central racks, Remote Power Racks, remote SCTs and units in the central racks and remote power racks. The following units contribute to the alarm reporting network:

- Central rack Alarm Unit
- Central rack Parallel I/O card
- Central rack System Alarm Panel
- Remote power rack System Alarm Panel
- Central rack and remote power rack Low-Voltage (Battery) Disconnect Panels (1 each)
- Central rack and remote power rack power supplies
- Central rack heat sensors in each rack
- Remote Alarm Panels (at the local SCTs/MCTs)
- Central rack card cage cards
- UPS Alarm (via alarm Interface to SCT/MCT and Remote Server)

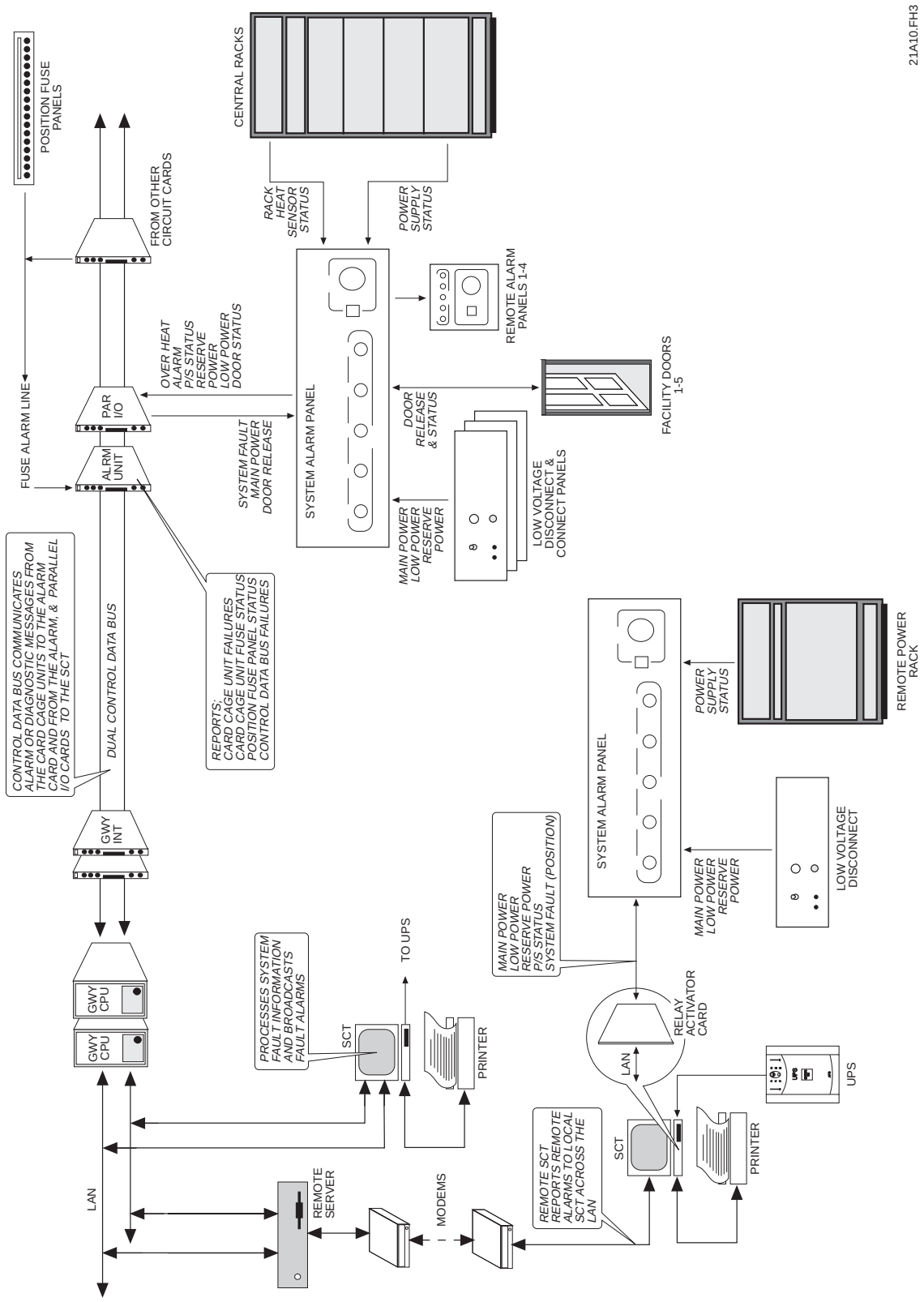


*Figure 4-28. Alarm Subsystem Block Diagram*

The system reports all alarm or status information to the SCT and MCT. The SCT/MCT then broadcasts the alarm to the System Alarm Panel and terminal maintenance log.

Indicators at the System Alarm Panels and Remote Alarm Panels display the fault. The panels also provide an audible alarm that can be muted at the front panel. Both the central rack and the remote power rack have a System Alarm Panel. Each local SCT and MCT position has a Remote Alarm Panel that repeats the alarms displayed at the central rack System Alarm Panel.

The Alarm Unit displays control data bus faults and provides an audible alarm for bus faults and blown fuses.

The System Alarm Panels and Remote Alarm Panels display the following alarm indications

- MAIN POWER
- LOW POWER
- RESERVE POWER
- SYSTEM FAULT
- OVERHEAT

***Alarms.*** The alarm subsystem reports the following alarms:

*Alarm Unit*—reports the following to the SCT/MCT

- Position power fuse blown
- Card cage circuit card operational status or fuse blown
- Control data bus (A & B) failure

The SCT and MCT display the above alarms and enter the alarms in the maintenance log. They also generate a SYSTEM FAULT alarm to the System Alarm Panels and the Remote Alarm Panels.

*System Alarm Panel*—receives the following information:

*From the Low-Voltage Disconnect Panels*

- Low power
- Reserve power

*From the central rack*

- Overheat (from rack heat sensors)
- Power supply operating status

*From the facility doors (up to 5)*

- Door open

*From the SCT via the Parallel I/O card*

- System fault
- Main Power

*From the positions via the Parallel I/O card*

- Door release

*System Alarm Panel*—reports the following alarms to the SCT and MCT via the Parallel I/O card.

- Overheat alarm from the rack heat sensors (via rack-mount thermostat switches)
- Power supply operating status
- Facility door status (up to 5 doors)
- Low battery power
- Reserve power available

The SCT and MCT report a MAIN POWER alarm if they determine from the power supply operating status that redundancy in power supplies is no longer available.

The System Alarm Panel reports all the alarms it displays to the Remote Alarm Panels. However, if the remote server fails, there will be no indication on the SCT/MCT screens; but the maintenance log will get an entry and the NISR Program (Network status) will indicate the downed server on its screen.

***Fuse Alarm Line.*** A fuse alarm line links the blown fuse detection circuits of all central rack card cage cards and position fuse panels. The alarm line terminates at the alarm detect circuitry of the Alarm Unit. If a fuse blows, the detector circuit pulls the fuse alarm line low, thus activating the fuse alarm detect circuitry in the Alarm unit. In response, the Alarm Unit sends a blown fuse alarm message to the SCT that in turn sends a System Fault alarm to the System Alarm Panel.

***Parallel I/O.*** The parallel I/O card interfaces all communication between the System Alarm Panel and the SCT and MCT via the control data bus. It also communicates the position door release command to the System Alarm Panel . The System Alarm Panel responds by activating the door release on the appropriate door.

***Remote Power Rack Alarms.*** The Remote Power Rack System Alarm Panel reports alarms to its local SCT via a Relay Actuator Card installed in one of the SCT ISA card slots. This card performs the same function in the alarm system that the Parallel I/O card performs in the central rack. However, it does not receive door release or door status information.

***Uninterruptable Power Supply (UPS).*** Monitoring software (Power Chute) installed in the associated SCTs/MCTs provide status information on the UPS (see Section 6) as received over RS-232 communications link from the associated UPS. Via this link, UPS status messages are displayed on the SCT/MCT status bar. When the Power Chute software installed on the computer detects system power problems (e.g., loss of power, low UPS battery power, etc.), it warns users via icons of the problem, then automatically shuts down the system (usually within 30 seconds).

## 4.3 SYSTEM ALGORITHMS

This paragraph gives examples of the program message flow that occurs through the system when a user initiates an operational function as follows:

- *Position User Presses a Button (paragraph 4.3.1)*
- *Position User Selects an Unselected Radio for Transmit Capability (paragraph 4.3.2)*
- *Position User Selects an Unmonitored Radio for Monitor (paragraph 4.3.3)*
- *Position User Transmits on a Selected Radio Using the PTT (paragraph 4.3.4)*
- *A Radio Indicates Incoming Audio (VOX Detect) (paragraph 4.3.5)*
- *Position User Initiates an Intercom Call Using a DA Key (paragraph 4.3.6)*
- *Position User Initiates an Intercom Call Using the IA Key (paragraph 4.3.7)*
- *Position User Answers an Incoming Intercom Call (paragraph 4.3.8)*
- *Position User Initiates an Outgoing Call on a Phone with Positive Call Termination (i.e.: ASU or E&M) (paragraph 4.3.9)*
- *Position User Initiates an Outgoing Call on a PBX Phone (paragraph 4.3.10)*
- *Position User Initiates an Outgoing Call on an SS-1 Dial-Out Phone (paragraph 4.3.11)*
- *Position User Initiates an Outgoing Call on an E&M Dial-Out Phone (paragraph 4.3.12)*
- *Position User Initiates an Outgoing Call on a Dedicated E&M Telephone Line (paragraph 4.3.13)*

These examples provide a general sequence of events for typical radio, telephone, and intercom operations.

### 4.3.1 Position User Presses a Button

a. User Presses a button at the Position.

b. The Position Processor detects the Key Press and sends a KEYPUSH message to the Operator Processor. This message includes whether the button is Pushed or Released and the KEY_ID of the button.

c. At the Operator Processor , the message is parsed. Since the message is a KEYPUSH message, the software jumps to the KEYPUSH handler.

d. The KEYPUSH handler indexes the Operator's KEY_MAP using the KEY_ID to determine the KEY_TYPE. The software jumps to the handler for the selected KEY_TYPE.

e. At the KEY_TYPE handler, the software starts the procedure defined for the specific type of key. Some KEY_TYPEs will require an additional "access" parameter be fetched from the KEY_MAP. Example: In case of a DA Intercom Key this parameter would be the destination channel.

### 4.3.2 Position User Selects an Unselected Radio for Transmit Capability

a. User Presses the button labeled TX for the desired radio. The KEYPUSH is sent to the Operator Processor.

b. The Operator Processor parses the KEYPUSH and determines that the user has selected a RADIO TX SELECT button and the channel of the radio to be selected.

c. The Operator Processor determines that this radio is not currently selected for TX. Note: If the radio was selected, this would deselect the radio.

d. The Operator Processor sends a RADIO TX SELECT message to the radio via the control data bus (CDB).

e. The Radio Processors receive the TX SELECT message and check the destination channel address. If the address of the Radio Processor matches the destination address, the message is accepted; else the message is ignored.

f. The accepting Radio Processor then flags the TX Select state of the Source Operator to be TRUE in its selection status table.

g. Then the Radio Processor replies to the Source Operator with a TX SELECT ACKnowledgment.

h. All Operator Processors receive the TX ACK and check the destination channel address to ignore a message, "not for me."

i. At the destination Operator Processor, the radio is flagged as TX Selected. The KEY_ID of the TX Key for this radio is found and a LIGHT message is sent to the Position to change the state of the button to a color/state that indicates the radio is selected.

j. When the Position receives the LIGHT message, it will set the new light state.

### 4.3.3 Position User Selects an Unmonitored Radio for Monitor

a. User Presses the button labeled RX for the desired radio. The KEYPUSH is sent to the Operator Processor.

b. The Operator Processor parses the KEYPUSH and determines that the user has selected a RADIO RX SELECT button and the channel of the radio to be selected.

c. The Operator Processor determines that this radio is not currently selected for RX.

d. The Operator Processor sends a RADIO RX SELECT message to the Radio Processors via the CDB.

e. The Radio Processors receive the RX SELECT message and check the destination channel address. If the address of the Radio Processor matches the destination address, the message is accepted; else the message is ignored.

f. The accepting Radio Processor then flags the RX Select state of the Source Operator to be TRUE in its selection status table.

g. The Radio Processor then replies to the Source Operator with a RX SELECT ACK.

h. All Operator Processors receive the RX ACK and check the destination channel address to ignore a message “not for me.”

i. At the destination Operator Processor, the radio is flagged as RX Selected. The KEY_ID of the RX Key for this radio is found and a LIGHT message is sent to the Position to change the state of the button to a color/state that indicates the radio is selected.

j. The state of the PER FREQUENCY Headset/Loudspeaker switch is determined, and the audio for the radio is summed to the Headset or Loudspeaker path to the Position.

k. When the Position receives the LIGHT message, it will set the new light state.

### 4.3.4 Position User Transmits on a Selected Radio Using the PTT

a. The Position User presses the PTT button. A PTT_ON message is sent to the Operator Processor.

b. The Operator Processor broadcasts a PTT_ON message to the CDB. This message is sent to all Radio Processors and the message source is the channel of the Operator Processor.

c. The Radio Processors receive the PTT_ON message and check the source channel address against the TX Select status table. If the source address is flagged for Xmit capability, the Radio Processor will process further; else the message will be ignored.

d. The accepting Radio Processors will then check to see if someone else is already transmitting. If TRUE, the ability of this Operator to preempt the current Operator will be checked. If a preempt is to occur, a RADIO_BUSY will be sent to the current transmitting Operator and this Operator will be removed as the current transmitting Operator.

e. If the radio is FREE, or the source Operator is a preemptor, the Radio Processor then turns ON the Xmitter PTT switch and switches in the source Operator's audio channel (audio is output to external TX audio lines).

f. The RADIO sends a PTT_ACK message to the Xmitting Operator.

g. All Operators will receive the PTT_ACK. If an Operator is not configured for the radio, the message will be ignored. If the Operator is configured for the radio and this Operator is not the destination of the PTT_ACK, then the Operator Processor will send a LIGHT message to the Position for the radio TX key to indicate that the radio is keyed by another Operator.

h. If the Operator Processor is the destination of the PTT_ACK message, the Operator will flag the radio as "keyed by me;" will send a LIGHT message to the TX button for this radio to indicate "keyed by me," and will send a SIDETONE ON message to the Position (provided no Sidetone radios are being keyed).

### 4.3.5 A Radio Indicates Incoming Audio (VOX Detect)

a. Incoming Voice Audio is received on the incoming RX lines to the Radio Processor.

b. The Radio Processor hardware sets a flag indicating VOX.

c. The Radio Processor software polls this flag, and when the indication indicates is VOX is TRUE, the software checks if the previous condition of the flag was TRUE.

d. If the VOX was off, then a VOX_ON message is sent on the CDB to ALL Operator. If VOX was previously on, then the status is ignored.

e. At all Operator positions, if the Operator is configured for the VOXing radio, a LIGHT message will be sent to the radio RX KEY_ID to indicate VOX detection.

### 4.3.6 Position User Initiates an Intercom Call Using a DA Key

a. User Presses a DA button configured for an Intercom call. The KEYPUSH is sent to the Operator Processor.

b. The Operator Processor parses the KEYPUSH and determines from the MAP that the user has selected an Intercom CALL button and determines the channel of the Operator to be called.

c. The Operator Processor determines that the state of this Operator channel is NOT CONNECTED. Note: other states of the Operator channel will not result in a call but must be processed on a case-by-case basis (i.e., if CONNECTED, HANGUP; if OVERRIDDEN, do nothing, etc.).

d. The Operator Processor sends messages to HANGUP all Intercom and Interphone connections via the CDB. All Operator Processors and Phone Interfaces will process the HANGUP if they are connected.

e. A CALL message is sent to the destination Operator Processor via the CDB.

f. All Operator Processors will receive the message and will check the destination channel address. If the Operator Processor's channel matches the destination address of the message, the Operator Processor will process the CALL, else the message will be ignored.

g. The accepting Operator Processor then sets the state of the source Operator Processor to the CALLING state, will send a CHIME message to the Position, and will send a LIGHT message indicating the incoming call to the DA KEY_ID for the calling Operator Processor (if no DA is configured, the Common Answer (CA) will be used.) A CALL_ACK is sent back to the calling Operator Processor via the CDB.

h. When the calling Operator receives the CALL_ACK a message will be sent to the Position to LIGHT the DA (key to indicate an outgoing call; a RING_BACK message is sent to turn on the ringback tone, and a SIDETONE ON message is sent to activate the MIC.

### 4.3.7 Position User Initiates an Intercom Call Using the IA

a. User Presses the IA button. The KEYPUSH is sent to the Operator Processor.

b. The Operator Processor parses the KEYPUSH and determines that the IA has been pushed.

c. The Operator Processor determines that the state of this Operator IA is not currently active. The Operator Processor will hang-up all ground communications and will send messages to HANGUP all Intercom and Interphone connections via the CDB. All Operator Processors and Phone Interfaces will process the HANGUP if they are connected (except Overrides).

d. The Operator Processor sets an IA active state and sends a LIGHT ON for the IA KEY_ID; a DIAL TONE ON message to the Position, and a SIDETONE ON message is sent to activate the MIC.

e. The User must then press the 3-digit IA code for the Operator to be called. On the first digit, the Operator Processor sends a message to the Position to turn DIAL TONE OFF. As each digit is dialed, the digit register is shifted and the new digit is added. When the third digit is received, the value in the digit register is used to index the IA TABLE. The value found in the IA TABLE is the channel of the device to call.

f. A CALL message is sent to the destination Operator Processor via the CDB.

g. All Operator Processors will receive the message and will check the destination channel address. If the Operator's channel matches the destination address of the message, the Operator Processor will process the CALL; else the message will be ignored.

h. The accepting Operator Processor then sets the state of the source Operator to the CALLING state; sends a CHIME message to the Position, and sends a LIGHT message indicating the incoming call to the DA KEY_ID for the calling Operator (if no DA is configured, the Common Answer (CA) will be used.) A CALL_ACK is sent back to the calling Operator via the CDB.

i. When the calling Operator receives the CALL_ACK a message will be sent to the Position to LIGHT the IA to indicate outgoing call; and a RING_BACK message is sent to turn on the ringback tone. Note: if the calling Operator has a button configured for the called Operator, the IA will be turned OFF and the DA will be turned ON.

### 4.3.8 Position User Answers an Incoming Intercom Call

a. The Position User presses the Flashing DA or CA which is indicating an incoming call. A KEY_PUSH message is sent to the Operator.

b. The Operator Processor processes the KEY_PUSH and determines the channel to answer from the KEY_ID. The state of the channel is found to be CALLING from the connection status table.

c. The Operator Processor will hang-up all existing ground-ground connections and will send messages to HANGUP all Intercom and Interphone connections via the CDB. All Operator Processors and Phone Interfaces will process the HANGUP if they are connected (except Overrides).

d. The audio channel of the calling Operator is switched in and the connection status is set to CONNECTED. A LIGHT message is sent to the appropriate DA or CA KEY_ID to indicate connection; a CHIME OFF message is sent to the Position to clear the audible chime, and a SIDETONE ON message is sent to activate the MIC.

e. A CALL ANSWER message is sent via the CDB to the calling Operator.

f. At the calling Operator position, the CALL ANSWER message is received; a LIGHT message is sent to the applicable DA or IA KEY_ID to indicate a connection; the audio of the called Operator is switched ON, and a RING BACK OFF message is sent to the Position.

### 4.3.9 Position User Initiates an Outgoing Call on a Phone with Positive Call Termination (i.e.: ASU or E&M)

a. User Presses the DA button. The KEYPUSH is sent to the Operator Processor.

b. The Operator Processor parses the KEYPUSH and determines from the MAP that the user has selected a Phone button and determines the channel of the Phone to be called.

c. The Operator position will hang-up all current ground-ground connections and will send messages to HANGUP all Intercom and Interphone connections via the CDB. All Operator Processors and Phone Interfaces will process the HANGUP if they are connected.

d. A CALL message is sent to the destination Phone Interface via the CDB and Phone Conferencer.

e. All Phone Interfaces will receive the message and will check the destination channel address. If the Phone's Interface channel matches the destination address of the message, the Phone Interface will process the CALL; else the message will be ignored.

f. The accepting Phone Conferencer then sets the state of the source Operator to the CALLING state and sends an Outgoing Call message to the Phone Interface. The Phone Interface will present a RING or E-Lead to the outside world.

g. The Phone Conferencer will switch in the audio of the calling Operator Processor and will send a CALL_ACK via the CDB to the calling Operator Processor.

h. When the calling Operator Processor receives the CALL_ACK, messages will be sent to the Position to LIGHT (solid green) the DA to indicate outgoing call; a RING_BACK message is sent to turn on the ringback tone, and a SIDETONE ON message is sent to activate the MIC.

i. All other Operator Processors will receive the CALL_ACK and if they have a DA button configured for the Phone, a LIGHT (Amber) message will be sent to the Position to inform the Position User that this phone is in-use.

j. When the external user answers the call, the Phone Interface will detect the offhook and will send an ANSWER message to the Phone Conferencer.

k. The Phone Conferencer will send a PHONE CONNECT message to the calling Operator Processor via the CDB.

l. When the calling Operator Processor receives the PHONE CONNECT, it will switch in the receive audio channel of the Phone Interface and will send a LIGHT (flutter green) message to the Position to indicate that the Phone is connected.

### 4.3.10 Position User Initiates an Outgoing Call on a PBX Phone

a. User Presses the DA button. The KEYPUSH is sent to the Operator Processor.

b. The Operator Processor parses the KEYPUSH; and determines from the MAP that the user has selected a Phone button, and determines the channel of the Phone to be called.

c. The Operator position hangs-up all current ground-ground connections and sends messages to HANGUP all Intercom and Interphone connections via the CDB. All Operator Processors and Phone Interfaces will process the HANGUP if they are connected.

d. A CALL message is sent to the destination Phone Interface via the CDB.

e. All Phone Conferencers will receive the message and will check the destination channel address. If the Phone's channel matches the destination address of the message, the Phone Conferencer will process the CALL; else the message will be ignored.

f. The accepting Phone Conferencer and sets the state of the source Operator to the CONNECTED state and sends an Outgoing Call message to the Phone Interface. The Phone Interface presents an OFFHOOK to the outside world.

g. The Phone Conferencer will switch in the audio of the calling Operator and sends a PHONE CONNECT message via the CDB to the calling Operator.

h. When the calling Operator receives the PHONE CONNECT, the Phone Conferencer will switch in the receive audio channel of the Phone; will send a LIGHT (flutter green) message to the Position to indicate that the Phone is connected, and sends a SIDETONE ON message to activate the MIC.

i. All other Operators will receive the PHONE CONNECT and if they have a DA button configured for the Phone, a LIGHT (Amber) message will be sent to the Position to inform the Position User that this phone is in-use.

j. The calling Operator will hear call progress from the Central Office, and will dial digits at the Position DTMF is generated at the Position and are passed to the Phone via the audio connection.

### 4.3.11 Position User Initiates an Outgoing Call on an SS-1 Dial-Out Phone

a. User Presses the DA button. The KEYPUSH is sent to the Operator Processor.

b. The Operator Processor parses the KEYPUSH and determines from the MAP that the user has selected a Phone button and determines the channel of the Phone to be called.

c. The Operator Processor will hang-up all current ground-ground connections and will send messages to HANGUP all Intercom and Interphone connections via the CDB. All Operator Processors and Phone Interfaces will process the HANGUP if they are connected.

d. A CALL message is sent to the destination Phone via the CDB.

e. All Phone Conferencers will receive the message and will check the destination channel address. If the Phone's channel matches the destination address of the message, the Phone Interfacer will process the CALL, else the message will be ignored.

f. The accepting Phone Conferencer then sets the state of the source Operator to the CONNECTED state and sends an Outgoing Call message to the Phone Interface.

g. The Phone Conferencer will switch in the audio of the calling Operator Processor and will send a PHONE CONNECT message via the CDB to the calling Operator Processor. The PHONE CONNECT message includes a parameter telling the Operator Processor that this is a PULSE DIAL phone.

h. When the calling Operator Processor receives the PHONE CONNECT, it will switch in the receive audio channel of the Phone; will send a LIGHT (flutter green) message to the Position to indicate that the Phone is connected; sends a SIDETONE ON message to activate the MIC, and a message to INHIBIT DTMF tones.

i. All other Operator Processor will receive the PHONE CONNECT and if they have a DA button configured for the Phone, a LIGHT (Amber) message will be sent to the Position to inform the Position User that this phone is in-use.

j. The Position User will dial digits on the position DTMF pad. These key presses will be sent as KEYPUSH messages to the Operator Processor. The Operator Processor will translate these KEYPUSH messages into DIGIT DIALED messages that will be sent on the CDB.

k. When DIGIT DIALED messages are received at the Phone Conferencer, DIGIT DIALED messages are sent to the Phone Interface. The Phone Interface pulse dials the digits using Frequency Shift Keying (FSK). The protocol of pulses and interdigit timing is specified by the SS-1/SS-4 specification.

### 4.3.12 Position User Initiates an Outgoing Call on an E&M Dial-Out Phone

a. User Presses the DA button. The KEYPUSH is sent to the Operator Processor.

b. The Operator Processor parses the KEYPUSH and determines from the MAP that the user has selected a Phone button and determines the channel of the Phone to be called.

c. The Operator Processor will hang-up all current ground-ground connections and will send messages to HANGUP all Intercom and Interphone connections via the CDB. All Operator Processors and Phone Interfaces will process the HANGUP if they are connected.

d. A CALL message is sent to the destination Phone via the CDB.

e. All Phone Conferencers will receive the message and will check the destination channel address. If the Phone's channel matches the destination address of the message, the Phone Conferencer will process the CALL; else the message will be ignored.

f. The accepting Phone Conferencer then sets the state of the source Operator to the CONNECTED state and will send an Outgoing Call message to the Phone Interface.

g. The Phone Interface will assert the M-lead.

h. The Phone Conferencer will switch in the audio of the calling Operator Processor and will send a CALL_ACK message via the CDB to the calling Operator Processor.

i. When the calling Operator Processor receives the CALL_ACK, a message will be sent to the Position to LIGHT (solid green) the DA to indicate outgoing call; a RING_BACK message is sent to turn on the ringback tone, and a SIDETONE ON message is sent to activate the MIC.

j. All other Operator Processors will receive the CALL_ACK and if they have a DA button configured for the Phone, a LIGHT (Amber) message will be sent to the Position to inform the Position User that this phone is in-use.

k. The external phone should signal our E-lead in response to our M-lead. It is now waiting for pulse dial digits.

l. The Phone Conferencer will send a PHONE CONNECT message to the calling Operator via the CDB.

m. When the calling Operator Processor receives the PHONE CONNECT, it will switch in the receive audio channel of the Phone; will send a LIGHT (flutter green) message to the Position to indicate that the Phone is connected; sends a SIDETONE ON message to activate the MIC, and a message to INHIBIT DTMF tones.

n. The Position User will dial digits on the position DTMF pad. These key presses will be sent as KEYPUSH messages to the Operator. The Operator will translate these KEYPUSH messages into DIGIT DIALED messages that will be sent on the CDB.

o. When DIGIT DIALED messages are received at the Phone Interface, DIGIT DIALED messages sent to the Phone Interface. The Phone Interface pulse dials the digits by turning the M lead off and on. The protocol of pulses and interdigit timing is specified in EIA 464A (paragraphs 4.6.2.3, 4.6.2.5, and 4.3.3.41) specification.

### 4.3.13 Position User Initiates an Outgoing Call on a Dedicated E&M Telephone Line

a. The operator depresses the key for the E&M line.

b. The position microprocessor detects the switch closure and relays the switch address to the Operator Processor.

c. The Operator Processor checks its memory for the correct circuit address and sends a message over the control data bus to the Phone Conferencer for the Phone Interface associated with the line.

d. The Phone Conferencer instructs the corresponding E&M Interface to initiate the call. Depending on the device type selected at the Phone Interface, the interface executes M-lead, tone-on-idle, tone-on-active, or SF signaling to notify the distant end that a call is present.

e. The Phone Conferencer sends a message over the control data bus to the position that the call has been initiated and, when the distant end responds, that a connection is established.

f. The Operator Processor decodes the message and turns on the audio receive, routes radio audio to the speaker, and sends a message to the position processor that the line is selected.

g. The position microprocessor turns the DA key indicator to solid on.

# SECTION 5.

# UNIT LEVEL FUNCTIONAL DESCRIPTION

## 5.1 INTRODUCTION

This section provides technical data on each of the LRU types installed in an ETVS system. For the units installed in the system configuration at your site, refer to the site installation documentation. Technical data includes front panel illustrations, a list of controls and indicators with their functions, strapping data, input and output signal data and a simplified block diagram with a brief functional description.

Using the block diagrams and connections illustrations in this section, and the radio, operator, and power distribution panel diagrams in Section 6, signal paths can be traced through the central racks from the card cage card to the demarc connection for the relevant channel. The block diagrams show the input and output signal paths and the major functional groups that process the signals.

All cards require firmware installed in the appropriate locations to perform their system function. Some cards can be used to perform different system functions by changing the installed firmware. When replacing cards, make sure the correct firmware EPROM(s) is installed for the function the card is to perform. Refer to Section 1 for a list of firmware by card. Also refer to Section 1, **Table 1-1**, for unit specifications.

All cards in the card cages are powered from the System +27.5 VDC supply. Each card is equipped with the necessary voltage regulators to power the circuitry installed on the card. The power regulator circuitry is essentially the same on all cards. Power regulator circuitry is not shown in the card functional block diagrams.

Functional description focuses on unit I/Os, the basic signal paths shown in the block diagrams and includes brief descriptions of the unit's operational features. The block diagrams identify control and status signals and microprocessor and associated unit control circuits. The watchdog timer and card ID circuits perform the same function and all the cards are described here.

The control data bus consists of two redundant buses identified at the unit front panel indicators as bus A and bus B. Thus the term A/B bus refers to the two redundant buses that form the control data bus.

***Watchdog Timer.*** The operating status of the on-board micro-processor is constantly monitored by the watchdog timer. If the status signal is not received within a specified time, the timer times out and a card failure error message is sent to the SCT.

***Card ID.*** All cards installed in the central rack card cages have a card slot and card cage ID recognition circuit. This circuit identifies the card cage and slot in which the card resides by reading the state of pins reserved on the slot edge connector for card and slot ID purposes. A 5-bit value determines the slot ID and a second 5-bit value determines the card cage ID. The card IDs provide specific addresses to which (4 bit in 4U card cage) messages are routed to each individual card. The Telephone card cage has 5-bits for card cage I.D. and 4-bits for slot I.D.

***Memory.*** There are three blocks of memory on each processor card. RAM stores the current configuration map down loaded from the SCT. The same map is copied into EEPROM memory so that the card can reboot with its current configuration. Lastly EPROM memory stores the firmware information that tells the card what it is and how it functions.

***Front Panel DIGN Switch Settings.*** The front panels of card cage cards have a DIGN switch that selects card operating modes. The only switch settings available on each card are those listed in the controls and indicators tables in the paragraphs that follow.

***Microprocessors and Microcontrollers.*** Microprocessors manage card audio switching, message handling, status and diagnostics overhead operations on all processor/conferencer cards. They operate at a clock rate of one half the on-board crystal frequency. Microcontrollers perform the same tasks on the telephone interface cards except they do not have access to the control data bus. The microcontrollers operate at the on-board crystal frequency.

The following units are described in this section:

**Card Cage Cards:**


- Timer/MUX and Cluster/MUX 5.2
- Phone Conferencer 5.3
- Telephone Interface Cards 5.4
    - PBX 2-wire and 4-wire Interfaces 5.4.1
    - ASU Interface 5.4.2
    - Phone E&M Interface 5.4.3
    - SS-1/4 Interface 5.4.4
- Ring Generator Unit 5.5

- Maintenance Access Unit 5.6
- Radio Processor 5.7
- Remote Radio Processor 5.8
- Parallel Control Processor 5.9
- Enhanced Operator Processor 5.10
- Operator Processor (Supervisory Record) 5.11
- Gateway Interface 5.12
- Alarm Unit 5.13
- High-Speed Data Link 5.14

**Computers:**

- Remote Server Computers 5.15
- Supervisor and Maintenance Configuration Terminals 5.16
- Gateway Computers 5.17

**Power:**

- Power Supplies (Versions 1 and 2) 5.18
- Remote Power Rack Power Supply (Versions 1 and 2) 5.19
- Uninterruptable Power Supplies 5.20
- System Alarm and Remote Alarm Panels 5.21
- Position Fuse Panel 5.22
- Low-Voltage Disconnect 5.23

**Distribution Panels:**

- Operator Distribution Panel 5.24
- Radio Distribution Panel 5.25
- Power Distribution Panel 5.26
- Remote Radio Connections 5.27

**Position Equipment:**

- Operator Position Equipment 5.28

TED Positions (Type 2) 5.28.1

Integrated Basic Operator Positions (Type 1) 5.28.2

Mini-Basic Operator Positions (Type 1) 5.28.3

- Speaker Module 5.29
- Jackbox 5.30
- Position Unit Interfaces 5.31

- Remote Position Interface Unit 5.32
- Supervisory Record Interface 5.33

**Miscellaneous:**

- Maintenance Speaker Panel 5.34
- Supervisor Position Printer 5.35
- Supervisory Recorders 5.36
- Selector Modules 5.37
- Transient Surge Protectors 5.38
- Thermostat, Normally Open, 160°F 5.39

To troubleshoot the system and isolate failed units, refer to the troubleshooting charts and tables in Section 6.

## 5.2 TIMER/MUX AND CLUSTER/MUX UNITS

The primary function of the Timer/MUX unit (TMU) is to provide a master system clock and a source for all clock signals required for voice data multiplexing. Additionally, the TMU contains circuitry that enables it to function as a cluster multiplexer. The TMU multiplexes the voice data signals for only one cluster, usually cluster 0. Cluster/MUX units (CMUs) multiplex the voice data signals in all other clusters. TMUs are installed in pairs to provide redundancy in the system timing circuits and the local cluster muxing circuitry.

The CMU performs muxing functions only, it does not generate timing signals. All timing for the CMU originates from the TMU. CMUs are also installed in pairs to provide cluster muxing redundancy.

Of the two TMUs installed in the System, one unit is the main clock source and the other unit is the standby. Only one unit is the active time source. The timing circuitry in both units functions continuously; however, only one unit provides system frame pulse and clock outputs to the rest of the System. Similarly, the MUX circuitry functions continuously in both units but only the unit with the active timing outputs writes multiplexed data to the 480 channel voice data bus. Switching from main to standby is transparent to the user.

When installing TMUs, it is required that one of the two TMUs is installed in slot 17 of the card cage and that the other is installed in slot 16. At TMU boot-up, the unit in slot 16 assumes the function of main TMU, performs a diagnostics self-test and, if functioning correctly, enables its timing signal and voice data bus outputs. It also sends a disable signal

to the standby unit in slot 17. Paragraphs 4.1.9 and 4.1.10 respectively, provide discussions on how the numbers are determined for 5U and 4U card cages.

If the main TMU should loose its clock or experience a multiplexing failure, the state of the disable signal to the standby is reversed. The standby then becomes the active time source and the output from its multiplexing circuitry is given access to the voice data bus. The main TMU shuts down its frame pulse, clock, and multiplexing outputs. The CMUs function in the same manner; however, only the muxing circuitry is diagnosed. The MAIN indicator on the front panel lights GREEN on the unit acting as main.

All functions of the TMU/CMU take place under the direction of a micro-processor. The microprocessor operates at 12 MHz and receives MUX control instructions over the control data bus.

***Front Panel Controls and Indicators.*** The front panel is illustrated in **Figure 5-1. Table 5-1** defines the control and indicator functions.

***TMU/CMU Strapping.*** Because the TMU/CMU can function in a number of configurations, it is most important that the correct strapping and firmware are installed on the card before it is inserted in the card cage slot. **Table 5-2** defines the strapping for the Timer/MUX unit and **Table 5-3** for the Cluster/MUX unit

***Input and Output Connections.*** All input and output connections are made at the card edge connector P1. The card cage backplane serves as the interface to this card and all other cards installed in the card cage. **Figure 5-2** illustrates the I/O connections at the card edge connector and identifies the function of the signal connected at each pin.

***Timing Source.*** Refer to **Figure 5-3**. Two crystal-controlled oscillators and a phase-locked-loop form the System time source. They establish a basic clock signal of 4.096 MHz and a system frame pulse (identified as FRS in pinout diagrams) that are used throughout the System to facilitate voice data multiplexing and analog/digital conversion of voice signals. An additional oscillator generates a 16 MHz clock for TMU use. This clock signal is used by the parallel access circuit (PAC) to the voice data bus.

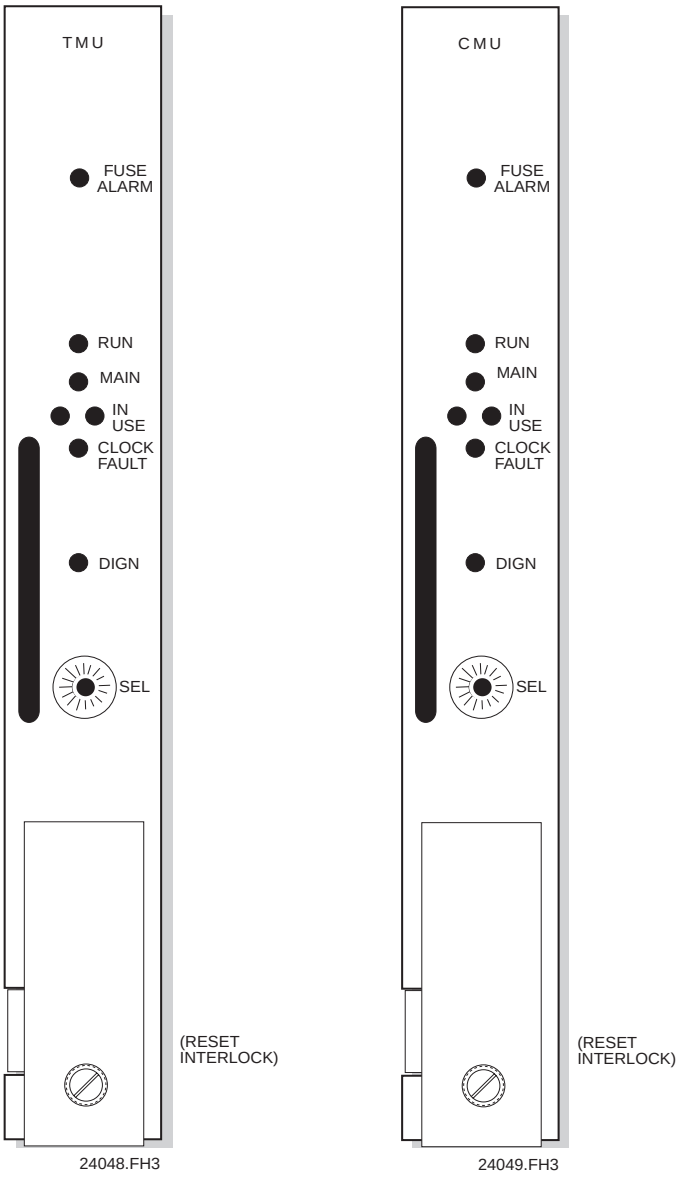


***Figure 5-1. TMU/CMU Front Panels***

### *Table 5-1. MUX Units Front Panel Controls and Indicators*

| NOMENCLATURE | FUNCTION |
|---|---|
| FUSE ALARM | Lights red if fuse blows |
| RUN | Lights green when CPU normal |
| IN USE | A (right)/B (left) bus active: steady on bus error |
| MAIN | Green if Main, off if Standby |
| CLK FAULT | Lights red during RESET<br>Latches red for frame pulse error |
| DIAG | Lights yellow during boot-up and diagnostics routines, stays lighted if boot-up fails |
| SEL | Set to 0 for normal use |
| RESET | Reset of unit (forcing reboot) done by loosening reset interlock thumbscrew until RUN LED goes out and RED CLK FAULT and AMBER DIAG LEDs turn on, then by tightening thumbscrew on reset interlock (see Figure 5-1). |

### *Table 5-2. Timer/MUX Unit Strapping*

| JUMPER | PURPOSE | STRAPPING |
|---|---|---|
| W2 | Stream selection: | |
| | Differential cluster 9 | 1-2 |
| | PCM highway 2, single-ended | 2-3 |
| W3 | Stream selection: | |
| | Differential cluster A | 1-2 |
| | PCM highway 3, single-ended | 2-3 |
| W4 | Stream selection: | |
| | Differential cluster B | 1-2 |
| | PCM highway 4, single-ended | 2-3 |
| W5 | Stream selection: | |
| | Differential cluster C | 1-2 |
| | PCM highway 2, single-ended | 2-3 |
| W6 | Stream selection: | |
| | Differential cluster D | 1-2 |
| | PCM highway 3, single-ended | 2-3 |
| W7 | Stream selection: | |
| | Differential cluster E | 1-2 |
| | PCM highway 4, single-ended | 2-3 |
| W12 | Watchdog enabled | 1-2* |
| W13 | Watchdog time out (1200 ms) | 1-2* |
| S1** | Normal | 0 |
| W1, 8-11, 15 | Not installed | N/A |

* ETVS default setting
** Switch Setting
(W2 through W7 are factory-set per system configuration and are slot-specific.)

***Table 5-3. Cluster/MUX Unit Strapping***

| JUMPER | PURPOSE | STRAPPING |
|---|---|---|
| W2 | Watchdog enabled | 1-2* |
| W3 | Watchdog time out (1200 ms) | 1-2* |
| W5 | Stream selection: | |
| Differential | Cluster bus 9 | 1-2 |
| | PCM highway 2, single-ended | 2-3 |
| W6 | Stream selection: | |
| Differential | Cluster bus B | 1-2 |
| | PCM highway 4, single-ended | 2-3 |
| W7 | Stream selection: | |
| | Cluster bus C | 1-2 |
| | PCM highway 2, single-ended | 2-3 |
| W9 | Stream selection: | |
| | Cluster bus A | 1-2 |
| | PCM highway 3, single-ended | 2-3 |
| W10 | Stream selection: | |
| | Cluster bus E | 1-2 |
| | PCM highway 4, single-ended | 2-3 |
| W11 | Stream selection: | |
| | Cluster bus D | 1-2 |
| | PCM highway 3, single-ended | 2-3 |
| S1** | Normal | 0 |
| W1, 4, 8 | Not used | N/A |

* ETVS default setting
** Switch setting
(W5 through W11 are factory-set by system configuration.)

***Multiplexing Circuitry.*** Voice data from each cluster in the central rack is fed to each MUX unit as a 2.048 MHz CEPT serial data stream. Voice data from the local cluster served by the MUX unit enters the unit via one of the up-link ports. Data from the other MUX units enters the unit over a cluster bus. The cluster bus links all MUX units in the system.

The local cluster up-link, contained in the same card cage in which the MUX unit is installed, passes over the backplane and enters the unit at edge connector P1. By installing the required strapping, one-of-four redundant up-link pairs can be selected as the local up-links. If the MUX unit is processing data from Phone Conferencers, each conferencer can be assigned to one of the up-link pairs.

| TYPE | SIGNAL | | PIN NUMBERS | | | | | SIGNAL | TYPE |
|---|---|---|---|---|---|---|---|---|---|
| | +24 VA | | 1 | 66 | +24 VA | 131 | +24 VA | | |
| | +24 VB | | 2 | 67 | +24 VB | 132 | +24 VB | | |
| | EMI GND | | 3 | 68 | EMI GND | 133 | EMI GND | | |
| | FSALRM | | 4 | 69 | FSALRM | 134 | FSALRM | | |
| OPEN | CLUSTER 0+ | I/O | 5 | 70 | E-2 GND | 135 | I/O | CLUSTER 0- | OPEN |
| " | CLUSTER 1+ | I/O | 6 | 71 | | 136 | I/O | CLUSTER 1- | " |
| " | CLUSTER 2+ | I/O | 7 | 72 | | 137 | I/O | CLUSTER 2- | " |
| " | CLUSTER 3+ | I/O | 8 | 73 | | 138 | I/O | CLUSTER 3- | " |
| " | CLUSTER 4+ | I/O | 9 | 74 | | 139 | I/O | CLUSTER 4- | " |
| " | CLUSTER 5+ | I/O | 10 | 75 | | 140 | I/O | CLUSTER 5- | " |
| " | CLUSTER 6+ | I/O | 11 | 76 | | 141 | I/O | CLUSTER 6- | " |
| " | CLUSTER 7+ | I/O | 12 | 77 | | 142 | I/O | CLUSTER 7- | " |
| " | CLUSTER 8+ | I/O | 13 | 78 | | 143 | I/O | CLUSTER 8- | " |
| " | CLUSTER 9+ | I/O | 14 | 79 | | 144 | I/O | CLUSTER 9- | " |
| " | CLUSTER 10+ | I/O | 15 | 80 | | 145 | I/O | CLUSTER 10- | " |
| " | CLUSTER 11+ | I/O | 16 | 81 | | 146 | I/O | CLUSTER 11- | " |
| " | CLUSTER 12+ | I/O | 17 | 82 | | 147 | I/O | CLUSTER 12- | " |
| " | CLUSTER 13+ | I/O | 18 | 83 | | 148 | I/O | CLUSTER 13- | " |
| " | CLUSTER 14+ | I/O | 19 | 84 | | 149 | I/O | CLUSTER 14- | " |
| " | CLUSTER 15+ | I/O | 20 | 85 | | 150 | I/O | CLUSTER 15- | " |
| " | | N/C | 21 | 86 | | 151 | N/C | | " |
| " | PCMIN1+ | N/C | 22 | 87 | | 152 | N/C | PCMIN1- | " |
| " | PCMOUT1+ | N/C | 23 | 88 | | 153 | N/C | PCMOUT1- | " |
| " | | N/C | 24 | 89 | E-2 GND | 154 | N/C | | " |
| " | | N/C | 25 | 90 | N/C | 155 | N/C | | " |
| OPEN | | N/C | 26 | 91 | N/C | 156 | N/C | | OPEN |
| BUSSED | CONTROL BUS A, AD0 | I/O | 27 | 92 | E-1 GND | 157 | I/O | BD0 CONTROL BUS B | BUSSED |
| | | | 28 | 93 | | 158 | | | |
| " | | | 29 | 94 | | 159 | | | " |
| | | | 30 | 95 | | 160 | | | |
| | | | 31 | 96 | | 161 | | | |
| " | | | 32 | 97 | | 162 | | | " |
| | | | 33 | 98 | | 163 | | | |
| | AD7 | I/O | 34 | 99 | | 164 | I/O | BD7 | |
| | AST | I/O | 35 | 100 | | 165 | I/O | BST | |
| | CONTROL BUS A, AIN | I/O | 36 | 101 | | 166 | I/O | BIN, CONTROL BUS B | |
| | CARD SLOT ID, CS0 | IN | 37 | 102 | | 167 | IN | CS1, CARD SLOT ID | |
| | CARD SLOT ID, CS2 | IN | 38 | 103 | | 168 | IN | CS3, CARD SLOT ID | |
| | CARD CAGE ID, CC0 | IN | 39 | 104 | | 169 | IN | CC4, CARD CAGE ID | |
| | CARD CAGE ID, CC3 | IN | 40 | 105 | | 170 | IN | CC2, CARD CAGE ID | |
| | (S1, W100) CARD CAGE ID | IN | 41 | 106 | E-1 GND | 171 | IN | CS4, CARD SLOT ID | |
| | CARD CAGE ID, CC5 | IN | 42 | 107 | E-3 GND | 172 | IN | CC6, CARD CAGE ID | |
| | | N/C | 43 | 108 | | 173 | N/C | | |
| | PCMH4B | IN | 44 | 109 | | 174 | IN | PCMH3A | |
| | PCMH4A | IN | 45 | 110 | | 175 | IN | PCMH3B | |
| | | N/C | 46 | 111 | | 176 | N/C | | |
| | | N/C | 47 | 112 | | 177 | IN | PCMH2B | |
| | | N/C | 48 | 113 | | 178 | N/C | | |
| | | N/C | 49 | 114 | | 179 | IN | PCMH2A | |
| | VOICE DATA BUS, DD0+ | I/O | 50 | 115 | | 180 | I/O | DD0-, VOICE DATA BUS | |
| | DD1+ | I/O | 51 | 116 | | 181 | I/O | DD1- | |
| | DD2+ | I/O | 52 | 117 | | 182 | I/O | DD2- | |
| | DD3+ | I/O | 53 | 118 | | 183 | I/O | DD3- | |
| | DD4+ | I/O | 54 | 119 | | 184 | I/O | DD4- | |
| | DD5+ | I/O | 55 | 120 | | 185 | I/O | DD5- | |
| | DD6+ | I/O | 56 | 121 | | 186 | I/O | DD6- | |
| | VOICE DATA BUS, DD7+ | I/O | 57 | 122 | | 187 | I/O | DD7-, VOICE DATA BUS | |
| | PCMH1B | IN | 58 | 123 | | 188 | IN | ZIP-, HIGH FOR VOICE BUS CHs 8-15 | |
| | 4.096 MHz CLOCK, 4M+ | OUT | 59 | 124 | | 189 | OUT | 4M-, 4.096 MHz CLOCK | |
| | SYS FRAME PULSE, FRS+ | OUT | 60 | 125 | | 190 | OUT | FRS-, SYS FRAME PULSE | |
| | | N/C | 61 | 126 | | 191 | N/C | | |
| | LOCAL FRAME PULSE, FRL+ | OUT | 62 | 127 | | 192 | OUT | FRL, LOCAL FRAME PULSE | |
| | 2.048 Hz CLOCK, 2M+ | OUT | 63 | 128 | | 193 | OUT | 2M-, 2.048 MHz CLOCK | |
| | PCMH1A | IN | 64 | 129 | | 194 | IN | ZIP, HI VOICE BUS CH 15 (TTL) | |
| BUSSED | ENBL/DISBL 1 FROM OTHER TMU | IN | 65 | 130 | E-3 GND | 195 | IN | ENBL/DISBL 2 FROM OTHER TMU | BUSSED |

N/C = NO CONNECTION (NOT USED)

***Figure 5-2. MUX Units Input and Output Connections***

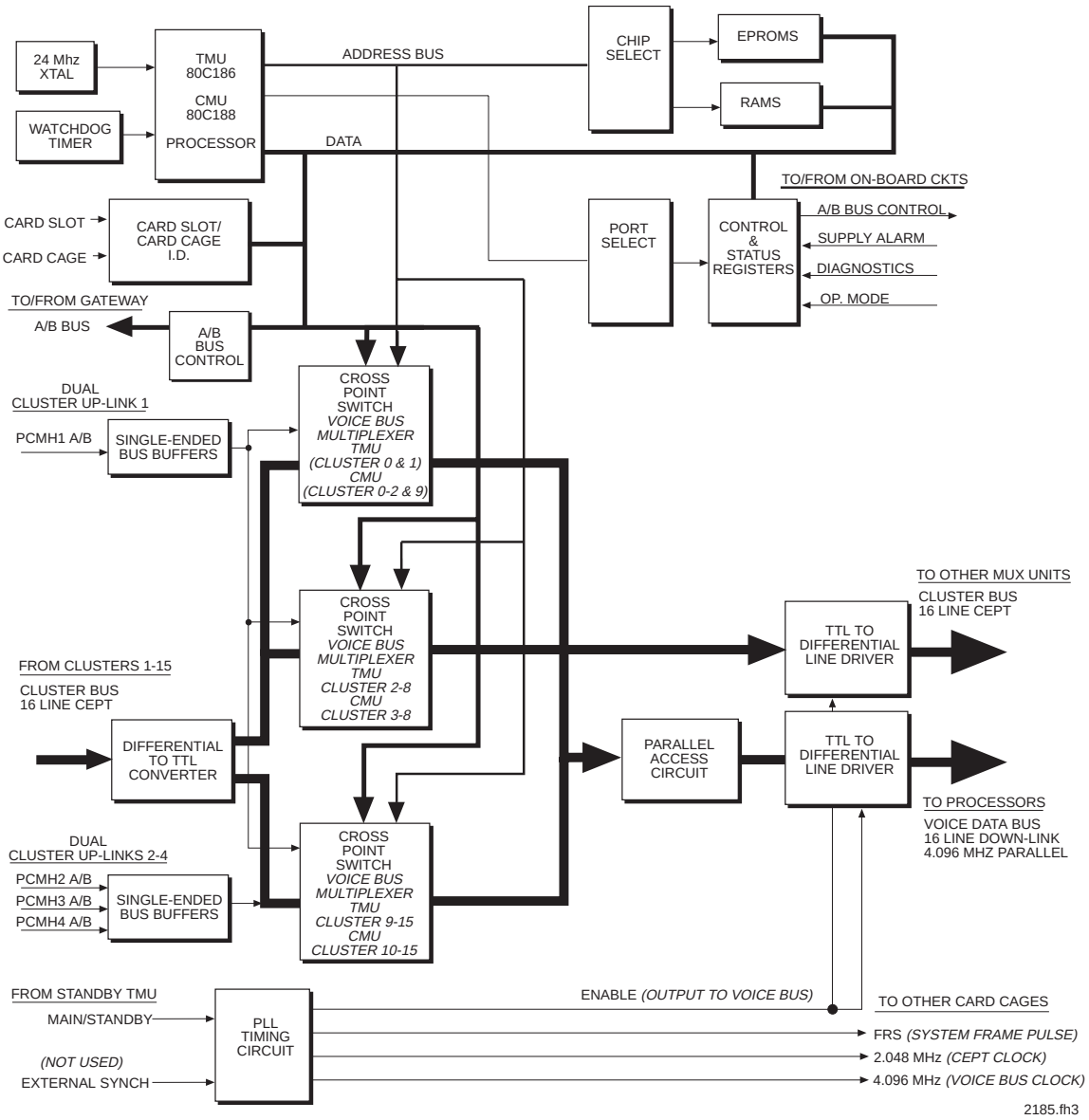


***Figure 5-3. MUX Units Functional Block Diagram***

The card cage local cluster up-link, used in card cages that contain MUX units, passes over the backplane and enters the MUX unit edge connector P1. Three additional up-links are available on the backplane for Phone Conferencers. By installing the required strapping, up to three redundant up-link pairs can be selected as up-links from Phone Conferencers in addition to the local up-link. If the MUX unit is processing data from Phone Conferencers, each conferencer can be assigned to one of the up-link pairs.

The remaining clusters, from other card cages, enter the unit over the cluster bus at P1 pins 5-20/135-150. This bus consists of 16 differential pairs, and links all MUX units in the central rack. Each MUX unit inserts the data from its local up-link onto this bus, thus making it available to all other MUX units.

The CEPT serial data streams of the up-links are fed through three cross-point switches (CPSs) that perform the multiplexing function. Clusters 0 and 1 are switched by U72, 2-8 by U73 and clusters 9-15 by U74. Switching data supplied to the CPSs over the control data buses, under direction of the TMU/CMU's micro-processor, instructs the CPSs to switch each cluster in turn to the input pins of the parallel access circuit (PAC) to the voice data bus. The switching sequence is such that all word 0s from each cluster followed by all word 1s etc., through word 31, are placed on the bus to form the voice data message frame. Each 8-bit serial word is converted to 8-bit parallel format by the PAC and output to the voice data bus. Data is clocked into the PAC at 2.048 MHz and clocked onto the bus at 4.096 MHz.

## 5.3 PHONE CONFERENCER (WITH AGC)

The Phone Conferencer (with AGC) multiplexes incoming calls, received over the phone lines it serves, into time slots on the up-link cluster data stream to the TMU/CMU. It also demultiplexes outgoing calls by accessing data in specific time slots in the 480 channel voice data bus message reserved for the telephone lines the conferencer serves. Each conferencer can serve up to 30 phone lines.

With an AGC adapter (daughter board) mounted on the conferencer board, the unit also provides received audio AGC for the 30 phone channels associated with the conferencer.

To ensure redundancy in the cluster-level telephone channel muxing process, two Phone Conferencers process each group of telephone channels. The redundant conferencers are installed in adjacent slots in the card cage and linked by redundant ST status buses ST6 and ST7. One unit acts as the “main” Phone Conferencer with active ST-bus I/Os to the Telephone Interfaces. The other assumes the “standby” mode in which the ST-bus I/Os to the Telephone Interfaces are disabled. The ‘main” conferencer must be installed in odd numbered slots (except 17) with the “standby” conferencer installed in the next higher even slot. If the “main” conferencer fails, the “standby” conferencer receives a fail status

signal over the ST status buses and, in response, assumes the place of "main." It remains the active card even after the failed "main" conferencer is replaced by a functioning card. Main/standby switching occurs only when the active card fails.

Board operation is managed by an 80C186 microprocessor operating at 25 MHz that receives system information over the A/B control data buses. Non-blocking conference summing is performed by a digital signal processor (DSP) using conference lists from an indexing network managed by the 80C186. The contents of the index is derived from the current system configuration established at the supervisor work station. A time-space crosspoint switch (CPS) manages the distribution of input and output voice data to and from the appropriate telephone interfaces.

***Front Panel Controls and Indicators.*** The front panel is illustrated in **Figure 5-4. Table 5-4** defines the control and indicator functions.

***Input and Output Connections.*** All input and output connections are made at the card edge connector P1. The card cage backplane serves as the interface to this card. **Figure 5-5** illustrates the I/O connections at the card edge connector and identifies the function of the signal connected at each pin.

***Phone Conferencer Strapping.*** Before installing the card in the card cage slot, ensure that the correct strapping is installed as defined in **Table 5-5**.

***Down-Link Voice data Process.*** **Figure 5-6** is a functional block diagram of the conferencer. The 480 channel voice data bus down-link enters the board through the eight differential/TTL line receivers. It is applied to the input of the voice data dual port RAM (VDPRAM). Data is written to this RAM from specific channels in the voice bus message. Each byte of data represents an 8 kHz voice sample. One or more bytes of voice data can be written to the RAM depending on the number of channels in the conferencer for a specific voice loop. Voice bus channel selection is determined by the data received from the index memory map dual port RAM (IMDPRAM). This process develops contiguous conferencing lists for each loop served by the conferencer. These lists are processed by the DSP. The CPS routes each byte to the appropriate voice loop.

**Automatic Gain Control.** The ETVS system provides voice level regulation (also called automatic gain control or AGC) on voice frequencies between 300 Hz and 3000 Hz and at the receiving voice paths from all interphone (IP) and PABX circuits. The conferencer is equipped with an AGC adapter (daughter board) that plugs into the conferencer board to provide received audio automatic gain control for the 30 phone channels that are interfaced with the conferencer. The AGC adapter (shown in Figure 5-6) takes an ST stream as its input and performs AGC on the digital audio of audio channel of the stream. This stream (STi3), **Figure 5-6**, has 32 channels, two of which (channels 0 and 16) are used for diagnostic data; the remaining 30 channels carry digital phone audio. Four sets of

Dip switches (8 each), allow the user to turn AGC on or off for each individual channel independently.

The following matrix presents a complete map of the STi stream channels versus the AGC control switches. The channel assignments remain the same for the STi3 output stream.

| STi3 Channels | Phone Card Cage | Phone Card Cage Slot # | Switch # | Position For AGC On | Position for AGC Off |
|---|---|---|---|---|---|
| 0 | A | | | | Note* |
| 1 | A | 1 | S1-1 | Closed | Open |
| 2 | A | 2 | S1-2 | Closed | Open |
| 3 | A | 3 | S1-3 | Closed | Open |
| 4 | A | 4 | S1-4 | Closed | Open |
| 5 | A | 5 | S1-5 | Closed | Open |
| 6 | A | 6 | S1-6 | Closed | Open |
| 7 | A | 7 | S1-7 | Closed | Open |
| 8 | A | 8 | S1-8 | Closed | Open |
| 9 | A | 9 | S2-1 | Closed | Open |
| 10 | A | 10 | S2-2 | Closed | Open |
| 11 | A | 11 | S2-3 | Closed | Open |
| 12 | A | 12 | S2-4 | Closed | Open |
| 13 | A | 13 | S2-5 | Closed | Open |
| 14 | A | 14 | S2-6 | Closed | Open |
| 15 | A | 15 | S2-7 | Closed | Open |
| 16 | | | | | Note* |
| 17 | B | 1 | S3-1 | Closed | Open |
| 18 | B | 2 | S3-2 | Closed | Open |
| 19 | B | 3 | S3-3 | Closed | Open |
| 20 | B | 4 | S3-4 | Closed | Open |
| 21 | B | 5 | S3-5 | Closed | Open |
| 22 | B | 6 | S3-6 | Closed | Open |
| 23 | B | 7 | S3-7 | Closed | Open |
| 24 | B | 8 | S3-8 | Closed | Open |
| 25 | B | 9 | S4-1 | Closed | Open |
| 26 | B | 10 | S4-2 | Closed | Open |
| 27 | B | 11 | S4-3 | Closed | Open |
| 28 | B | 12 | S4-4 | Closed | Open |
| 29 | B | 13 | S4-5 | Closed | Open |
| 30 | B | 14 | S4-6 | Closed | Open |
| 31 | B | 15 | S4-7 | Closed | Open |

*NOTE: Channels 0 and 16 carry diagnostic data and are by-passed.

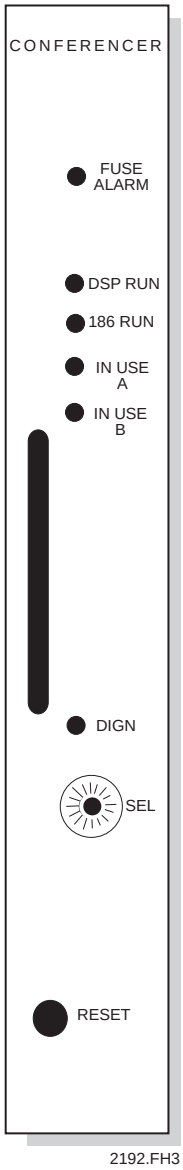


***Figure 5-4. Phone Conferencer Front Panel***

### *Table 5-4. Phone Conferencer Front Panel Controls and Indicators*

| NOMENCLATURE | FUNCTION |
|---|---|
| FUSE ALARM | Lights red if fuse blows |
| DSP RUN | Lights green when DSP normal |
| 80C186 RUN | Lights green when CPU normal |
| IN USE A | A bus active: steady on, bus error |
| IN USE B | B bus active: steady on, bus error |
| DIGN | Lights yellow in diagnostics mode and during boot-up |
| SEL | Not used, set to 0 (zero) |
| RESET | Press to force reboot |

### *Table 5-5. Phone Conferencer Unit Strapping*

| JUMPER | PURPOSE | | STRAPPING |
|---|---|---|---|
| W4 | Toggle | (480 ch) | 1-2* |
| W5 | DPRAM | (480 ch) | 1-2* |
| W6 | Ram size | (128Kx8) | 1-2 |
| | | (512Kx8) | 2-3* |
| W7 | B-bus in use | (Fault correction enabled) | 2-3* |
| W8 | Watchdog | (Enabled) | 1-2* |
| W9 | A-bus in use | (Fault correction enabled) | 2-3* |
| W10 | EPROM size | (128Kx8) | 1-2* |
| | | (256Kx8) | 2-3 |
| W11 | DSP Watchdog time out | (1200 ms) | 1-2* |
| W12 | DSP Test Mode | (Normal) | 2-3* |
| W13 | DSP EPROM size | (2K) | 1-2 |
| | | (8K) | 2-3* |
| W14 | DSP EPROM | (2K) | 1-2 |
| | | (8K) | 2-3* |
| W16 | 2C clock source | (480 ch) | 1-2* |
| W17 | TDM Rate | (4C, 480 ch) | 1-2* |
| W18 | DSP Zip Source | (bipolar) | 1-2 |
| | | (single ended) | 2-3* |
| W19 | Watchdog time out | (1200 ms) | 1-2* |
| S1** | Normal | | 0 |
| S3** | Not used | | N/A |
| S4** | Normal | | All down |
| W1-3, 15 | Not used | | N/A |

* ETVS default setting
** Switch setting

| TYPE | SIGNAL | | PIN NUMBERS | | | | | SIGNAL | TYPE |
|---|---|---|---|---|---|---|---|---|---|
| | +24 VA | | 1 | 66 | +24 VA | 131 | +24 VA | | |
| | +24 VB | | 2 | 67 | +24 VB | 132 | +24 VB | | |
| | CGND | | 3 | 68 | CGND | 133 | CGND | | |
| | FSALRM | | 4 | 69 | FSALRM | 134 | FSALRM | | |
| OPEN | | N/C | 5 | 70 | E-2 CGND | 135 | N/C | | OPEN |
| “ | | N/C | 6 | 71 | | 136 | N/C | | “ |
| “ | | N/C | 7 | 72 | | 137 | N/C | | “ |
| “ | | N/C | 8 | 73 | | 138 | N/C | | “ |
| “ | | N/C | 9 | 74 | | 139 | N/C | | “ |
| “ | | N/C | 10 | 75 | | 140 | N/C | | “ |
| “ | | N/C | 11 | 76 | | 141 | N/C | | “ |
| “ | | N/C | 12 | 77 | | 142 | N/C | | “ |
| “ | M/S STATUS, STO6 | | 13 | 78 | | 143 | | ST07, M/S STATUS | “ |
| “ | M/S STATUS, STI6 | | 14 | 79 | | 144 | | STI7, M/S STATUS | “ |
| “ | | N/C | 15 | 80 | | 145 | N/C | | “ |
| “ | | N/C | 16 | 81 | | 146 | N/C | | “ |
| “ | | N/C | 17 | 82 | | 147 | N/C | | “ |
| “ | | N/C | 18 | 83 | | 148 | N/C | | “ |
| “ | | N/C | 19 | 84 | | 149 | N/C | | “ |
| “ | | N/C | 20 | 85 | | 150 | N/C | | “ |
| “ | TXAUDIO+ | OUT | 21 | 86 | | 151 | OUT | TXAUDIO- | “ |
| “ | RXAUDIO+ | IN | 22 | 87 | | 152 | IN | RXAUDIO+ | “ |
| “ | CONTROL 1+ | OUT | 23 | 88 | | 153 | OUT | CONTROL 1- | “ |
| “ | STATUS 1+ | IN | 24 | 89 | E-2 AGND | 154 | IN | STATUS 1- | “ |
| “ | CONTROL 2+ | OUT | 25 | 90 | TXB | 155 | OUT | CONTROL 2- | “ |
| OPEN | STATUS 2+ | IN | 26 | 91 | RXB | 156 | IN | STATUS 2- | OPEN |
| BUSSED | CONTROL BUS A, AD0 | I/O | 27 | 92 | E-1 GND | 157 | I/O | BD0 CONTROL BUS B | BUSSED |
| | DD1+ | I/O | 28 | 93 | | 158 | | | |
| “ | DD2+ | I/O | 29 | 94 | | 159 | | | “ |
| | DD3+ | I/O | 30 | 95 | | 160 | | | |
| | DD4= | II/O | 31 | 96 | | 161 | | | |
| “ | DD5= | I/O | 32 | 97 | | 162 | | | “ |
| | DD6+ | I/O | 33 | 98 | | 163 | | | |
| | AD7 | I/O | 34 | 99 | | 164 | I/O | BD7 | |
| | AST | I/O | 35 | 100 | | 165 | I/O | BST | |
| | CONTROL BUS A, AIN | I/O | 36 | 101 | | 166 | I/O | BIN, CONTROL BUS B | |
| | CARD SLOT ID, CS0 | IN | 37 | 102 | | 167 | IN | CS1, CARD SLOT ID | |
| | CARD SLOT ID, CS2 | IN | 38 | 103 | | 168 | IN | CS3, CARD SLOT ID | |
| | CARD CAGE ID, CC0 | IN | 39 | 104 | | 169 | IN | CC4, CARD CAGE ID | |
| | CARD CAGE ID, CC3 | IN | 40 | 105 | | 170 | IN | CC2, CARD CAGE ID | |
| | (S1, W100) CARD CAGE ID | IN | 41 | 106 | E-1 DGND | 171 | IN | CS4, CARD SLOT ID | |
| | CARD CAGE ID, CC5 | IN | 42 | 107 | E-1 DGND | 172 | IN | CC6, CARD CAGE ID | |
| | CARD CAGE ID, CC7 | IN | 43 | 108 | | 173 | N/C | | |
| | PCMH4B | OUT | 44 | 109 | | 174 | OUT | PCMH3B | |
| | PCMH4A | OUT | 45 | 110 | | 175 | OUT | PCMH3A | |
| | | N/C | 46 | 111 | | 176 | N/C | | |
| | | N/C | 47 | 112 | | 177 | OUT | PCMH2B | |
| | | N/C | 48 | 113 | | 178 | N/C | | |
| | | N/C | 49 | 114 | | 179 | OUT | PCMH2A | |
| | VOICE DATA BUS, DD0+ | I/O | 50 | 115 | | 180 | I/O | DD0-, VOICE DATA BUS | |
| | DD1+ | I/O | 51 | 116 | | 181 | I/O | DD1- | |
| | DD2+ | I/O | 52 | 117 | | 182 | I/O | DD2- | |
| | DD3+ | I/O | 53 | 118 | | 183 | I/O | DD3- | |
| | DD4+ | I/O | 54 | 119 | | 184 | I/O | DD4- | |
| | DD5+ | I/O | 55 | 120 | | 185 | I/O | DD5- | |
| | DD6+ | I/O | 56 | 121 | | 186 | I/O | DD6- | |
| | VOICE DATA BUS, DD7+ | I/O | 57 | 122 | | 187 | I/O | DD7-, VOICE DATA BUS | |
| | PCMH1B | OUT | 58 | 123 | | 188 | IN | ZIP, ZERO DATA “HOLE” | |
| | 4.096 MHz CLOCK, 4M+ | IN | 59 | 124 | | 189 | IN | 4M-, 4.096 MHz CLOCK | |
| | SYSTEM FRAME PULSE, FRS+ | IN | 60 | 125 | | 190 | IN | FRS-, SYSTEM FRAME PULSE | |
| | | N/C | 61 | 126 | | 191 | N/C | | |
| | LOCAL FRAME PULSE, FRL+ | IN | 62 | 127 | | 192 | IN | FRL-, LOCAL FRAME PULSE | |
| | | N/C | 63 | 128 | | 193 | N/C | | |
| | PCMH1A | OUT | 64 | 129 | | 194 | IN | ZIP, ZERO DATA “HOLE” | |
| BUSSED | | N/C | 65 | 130 | E-1 DGND | 195 | N/C | | BUSSED |

N/C = NO CONNECTION (NOT USED)
I = LOGIC LEVEL ACTIVE LOW

***Figure 5-5. Phone Conferencer Input and Output Connections***

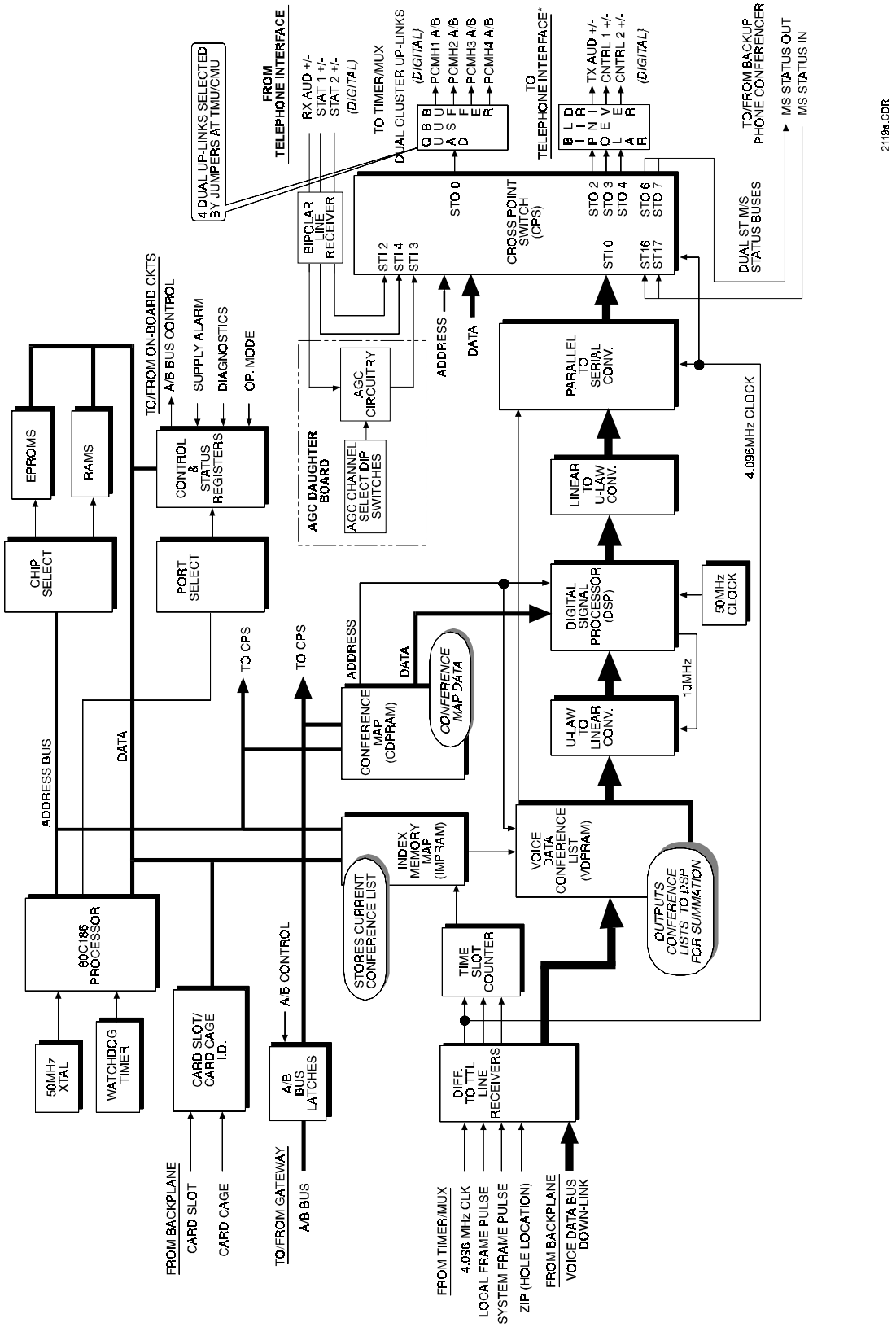


*Figure 5-6. Phone Conferencer Functional Block Diagram*

The data in each list in the VDPRAM is read, under control of the DSP, through two look-up table PROMS programmed to convert the 8-bit u-law data to linear values at the DSP input. This input is 16-bits wide. The DSP sequentially sums the data in each list, according to information provided by the conference information map dual port RAM (CDPRAM), to form a composite value of all the channels in the conference list.

The IMDPRAM and VDPRAM actually develop two lists stored on separate pages in memory: an active page currently in use and a working page that is developed while the active page is in use. Changes are only made to the working page, never the active page.

The IMDPRAM stores lists of channel number addresses that are used by the VDPRAM to locate voice data of active channels in the down-link. They are arranged in the VDPRAM as contiguous lists. No channel can be in more than one conference list at a time. The DSP must know the start address of the current list and the list length. It gets this information from the Conferencing Dual-Port RAM (CDPRAM) for all the lists currently being processed by the VDPRAM. By this process, a list is formed and a conference is summed for each voice loop output.

If a party hangs up in a current list, rather than change the pages or update the CDPRAM in the middle of the conference summation, the voice data is replaced with a "hole" (silence data) in the VDPRAM. The CDPRAM still indicates the same number of members in the conference; however, one of the members has now become silence. There is always at least one member in a conference, if in fact there are no members, the one member is processed as silence

The summed conference output from the DSP is converted back to an 8-bit u-law value by a linear to μ-law conversion PROM. It is then serialized by the parallel-to-serial converter and fed to the CPS. Data supplied to the CPS by the 80C186 defines the destination of each frame of channel data. The CPS distributes each frame to the active members of the conference attached to it. The CPS can handle up to 256 channels of data.

***Up-link Voice data Processing.*** In the up-link, each input channel to the conferencer is received as a CEPT format signal on an ST-bus data stream by the CPS. They are multiplexed by the CPS. The output of the CPS is a CEPT multiplexed data stream of all channels served by the conferencer. The Phone Conferencer places the voice data on the redundant up-links to the TMU or CMU assigned to the Conferencer by the configuration software. System design provides four redundant up-link pairs at the backplane; however, only one pair is used by each conferencer. Jumpers on the TMU

and CMU circuit cards, set during system installation, select the up-links required for the cluster. At system configuration, when the Supervisor assigns the Phone Conferencer to a card cage, the configuration software assigns the unit to one of the available up-link pairs. The channels are arranged in sequential order by channel number and, at the Timer/MUX level, are arranged into 32 byte messages and then multiplexed onto the 480 channel voice data bus.

Normally, a single channel is connected to the outgoing telephone line; however, a conference of several channels could be summed by the conferencer for output over the telephone line.

## 5.4 TELEPHONE INTERFACE CARDS

Telephone interface cards provide porting to the central rack equipment for various types of telephone lines. Each card furnishes all necessary call progress signaling for the line it interfaces except the PBX cards which use the dial tone supplied by the central office.

ETVS System design supports the following telephone interface types:

- PBX 2-wire
- PBX 4-wire
- ASU
- E&M (4-, 6-, or 8-wire)
- SS-1/SS-4

The type and quantity of each telephone interface installed in the system depends on the requirements at the individual site and may change after initial installation. **Figure 5-7** illustrates the five cards.

Each card supports several device types (classes of service) for the type of line it interfaces. To set up a card for a particular service, a device-type selector switch, S1, and a series of circuit card jumpers must be set. The subparagraph for each interface card includes tables defining device-type switch settings and jumper settings.

The interfaces adapt the analog voice and call processing signals of a single phone line to the digital I/O requirements of the Phone Conferencer. They translate the digital voice data signal to analog audio in the transmit path and perform the reverse operation in the receive path.

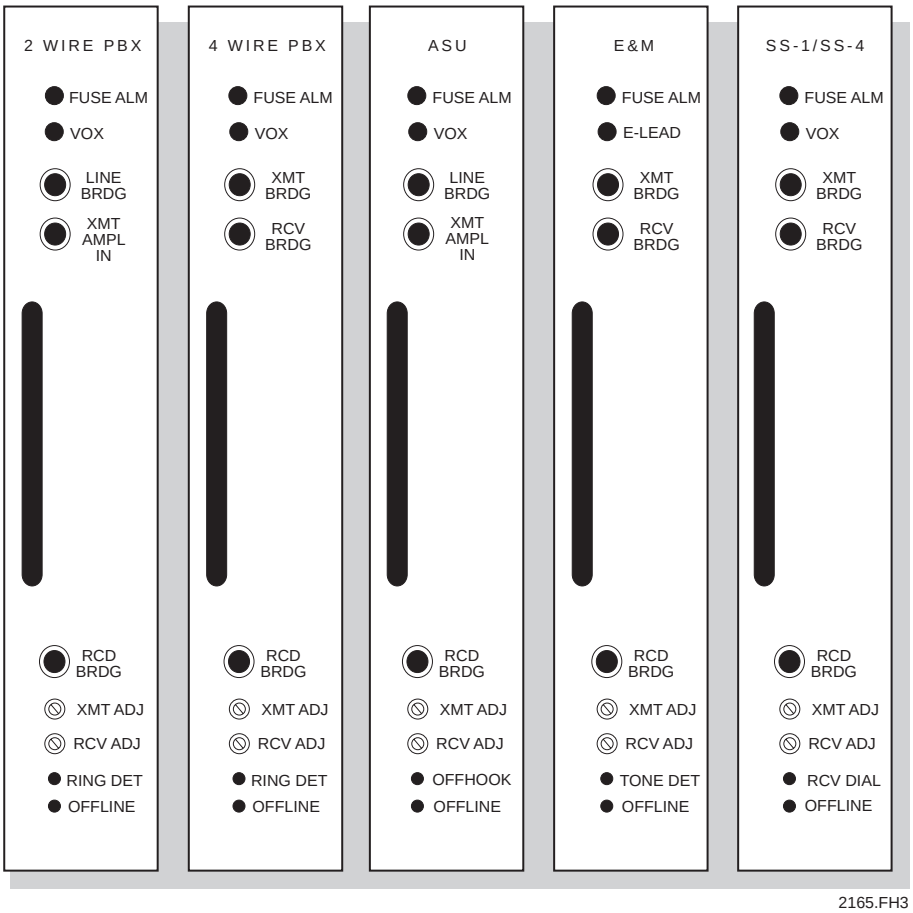


***Figure 5-7. Interface Card Front Panels***

The interfaces detect the presence of phone-line ring and status signals (as applicable to the type of line) and translate them into an ST-bus formatted-differential data message (STAT 1). Information in the message is fed, via the Phone Conferencer and Operator Processors, to the operator positions.

In response to control data received from the operator positions, the Interfaces generate dial or ring signals and assume various operating modes. This information is fed from the positions to the appropriate interfaces via the Operator Processors and the Phone Conferencer. It is input to the appropriate interface over the ST-bus as a differential data message (CNTRL 1 and CNTRL 2).

The interfaces access the ST data streams that carry voice, control and status data, using timing signals that correspond to the appropriate time slot for the channel served by each interface. There are two ST-buses, one for each conferencer in the redundant conferencer pair.

The interface board circuitry performs three basic functions: unit control and status, digital voice processing, and analog voice processing.

***Unit Control and Status.*** Digital circuits process the ST differential control and status data messages sent to, and received from, the Phone Conferencer. There are three input and three output data streams to and from the Phone Conferencer transmitted over an ST-bus between the Phone Conferencer and the Interface cards. All phone interface boards are connected to the conferencer over this bus. Not all cards use the same I/Os. Refer to the following paragraphs for information specific to a card type. The I/Os include voice data (TX AUD & RX AUD), telephone line control data (CNTRL 1 & CNTRL 2), and telephone line status data (STAT 1 & STAT 2).

A micro-controller on each interface processes the CNTRL 1 and CNTRL 2 data to produce the enable signals that execute on-board operational functions such as VOX RESET. The micro-controller also collects status data from various board circuits, such as VOX DETECT, and outputs it over the ST STAT 1 or STAT 2 streams to the Phone Conferencer. The Phone Conferencer places the status data on the control data bus. It travels across the bus to the Operator Processors that serve the positions with access to the Telephone Interface. Each Operator Processor sends the information over the ISDN link to the position.

***Digital Voice Processing.*** In the transmit path, digital voice enters the Interfaces as a differential signal from the Telephone Conferencer at TX AUD. A differential converter translates the signal to a single-ended format and feeds it to a codec. The codec performs digital-to-analog voice conversion and feeds the analog output to the analog circuitry.

In the receive path, the same codec performs analog-to-digital voice conversion. The receive digital voice signal output from the codec is converted to a differential signal by the differential converter and output to the Telephone Conferencer at RX AUD.

***Analog Voice Processing.*** The analog circuitry processes the analog voice signals in the transmit and receive paths on the analog side of the codec and performs the telephone line control functions in response to the control data messages processed by the digital circuitry. Dial or ring signals are sent out by this circuitry and receive ring and voice detection is performed as applicable.

The ASU and 2-Wire PBX Interfaces provide a 600- or 900-ohm termination to the telephone line in a transformer hybrid circuit. The other interfaces provide 600-ohm termination to the line.

***Recorder Output.*** Each Telephone Interface card provides a fixed gain recorder output to a customer-furnished recorder, via the telephone card cage backplane. All audio is output

to the recorder, including TX and RX voice, dial and ring tones, and a record beep tone. There is no record adjust circuit provided on the cards.

***Timing.*** The digital control circuitry performs timing and address functions. This circuitry develops the time-slot gating signals from the cluster local frame pulse (derived from the system frame pulse in the TMU/CMU) and the 4.096 MHz system clock.

***Device Type.*** A switch selection at S1 sets the class of service (DIAL PULSE, DTMF, etc.). Strapping jumpers establish the desired operating configuration.

***Interface Card Front Panels.*** Refer back to **Figure 5-7** for an illustration of the front panels of the five telephone interface cards and refer to **Table 5-6** for a list of the front panel controls and indicators.

To gain access to the line, the operator selects the DA key designated for the line or uses the indirect access method. The switch operation is detected by the position audio board, encoded to a digital message, and routed to the position's Operator Processor

***Table 5-6. Telephone Interface Cards Front Panel Controls and Indicators***

| NOMENCLATURE | FUNCTION |
|---|---|
| FUSE ALARM | Lights red if fuse blows |
| E-LEAD | Lights green for E-lead function (if configured) |
| VOX | Lights green for RX voice:<br>PBX (4W) on -22 dBmO, off -28 dBmO<br>PBX (2W) on -22 dBmO, off -28 dBmO<br>SS-1/4 on -22 dBmO, off -28 dBmO |
| LINE BRDG (PBX 2W & ASU) | F/P jack; to monitor TX/RX line |
| XMT BRDG (PBX 4W, E&M, & SS-1/4) | F/P jack; to monitor TX line |
| XMT AMPL IN (PBX 2W, ASU) | F/P jack; to inject a test signal in align mode |
| RCV BRDG (PBX 4W, E&M, & SS-1/4) | F/P jack; to monitor RX line |
| RCD BRDG | F/P jack; for monitoring recorder input |
| XMT ADJ | Potentiometer; adjusts TX amplifier gain |
| RCV ADJ | Potentiometer; adjusts RX amplifier gain |
| RING DET (PBX) | Lights green for incoming ring signal |
| OFFHOOK (ASU) | Lights green when operator access as line |
| TONE DET (E&M) | Lights green for incoming SF tone:<br>on -23 dBmO, off -33 dBmO |
| RCV DIAL (SS-1/SS-4) | Lights green for incoming SS-1 tones<br>on -20 dBmO, off -30 dBmO |
| OFF LINE | Lights red if card fails and is shut down |

that broadcasts the message over the control data bus. The message is processed by the Phone Conferencers and sent to the Telephone Interface cards. The card for which the position key is configured recognizes the address and, in response, the micro-controller

causes the interface to seize the line and establish the initial states for placing a call based on the device type configured. This circuit returns an acknowledge signal to the position causing the selected key to indicate that the device has responded to the selection.

### 5.4.1 PBX 2-wire and 4-wire Interfaces

The PBX Interface is available in 2-wire and 4-wire versions. The two versions use the same circuit board with different component populations and have different part numbers. This paragraph describes both versions. The block diagram, **Figure 5-9**, illustrates both card types.

**Table 5-7** lists the device-type selections at S1 for PBX 2-wire and **Table 5-8** lists the device-type selections at S1 for PBX 4-wire. **Table 5-9** lists the jumper settings. **Figure 5-8** lists the input and output connections for both the PBX 2-wire and 4-wire cards.

The three ST data streams to the PBX Interface from the Phone Conferencer, labeled TX AUD, CNTRL 1, and CNTRL 2 in the block diagram, contain data as follows:

| | |
|---|---|
| TX AUD | Transmit voice data |
| CNTRL 1 & CNTRL 2 | Control data— |
| | - Dial pulse |
| | - Ring enable |
| | - Answer |
| | - Ground start enable |
| | - VOX reset |
| | - Tone enable |
| | - Power-down |
| | DTMF generation |

The three ST data streams to the Phone Conferencer from the PBX Interface labeled RX AUD, STAT 1, and STAT 2 in the block diagram, contain the following data:

| | |
|---|---|
| RX AUD | Receive voice data |
| STAT 1 & STAT 2 | Channel and phone line status— |
| | - VOX detect |
| | - Ring detect |
| | - Caller ID |
| | - Board and slot information |

The PBX digital circuitry, described in the introduction to the telephone interfaces, is functionally the same as the other telephone cards. The analog circuitry is, however, unique to the card as follows:

***Table 5-7. PBX 2-Wire Telephone Device Type***

| S1 | SIGNAL IN | SIGNAL OUT | CALL TERM. | BATTERY SOURCE | HYBRID |
|---|---|---|---|---|---|
| 0 | 20 Hz | Loop start | No | GFE | Yes |
| 1 | 20 Hz | Ground start | No | GFE | Yes |
| 2 | 20 Hz + ID | Loop + DTMF | No | GFE | Yes |
| 3 | 20 Hz + ID | Loop + Pulse | No | GFE | Yes |
| 4 | 20 Hz + ID | Ground + DTMF | No | GFE | Yes |
| 5 | 20 Hz + ID | Ground + Pulse | No | GFE | Yes |
| 6 | 20 Hz | Voice | No | None | Yes |
| 8 | VOX | Voice | No | None | Yes |
| F | Align Mode | | | | |
| 7, 9-E | Not used | N/A | N/A | N/A | N/A |

***Table 5-8. PBX 4-Wire Telephone Device Type***

| S1 | SIGNAL IN | SIGNAL OUT | CALL TERM. | BATTERY SOURCE | HYBRID |
|---|---|---|---|---|---|
| 0 | None | Voice | No | None | No |
| 1 | VOX | Voice | No | None | No |
| 2 | 20 Hz | 20 Hz Manual | No | None | No |
| 3 | 20 Hz | Loop | No | GFE | No |
| 4 | 20 Hz + ID | Loop + DTMF | No | GFE | No |
| 5 | 20 Hz + ID | Loop + Pulse | No | GFE | No |
| F | Align Mode | | | | |
| 6-E | Not used | N/A | N/A | N/A | N/A |

## *Table 5-9. PBX 2-Wire & 4-Wire Telephone Interface Strapping*

| JUMPER | PURPOSE | STRAPPING |
|---|---|---|
| W4 | Connects TCG to CGND | OFF*<br>1-2 (test) |
| S1** | Device type<br>(see Table 5-7. PBX 2-Wire Telephone Device Type and Table 5-8. PBX 4-Wire Telephone Device Type) | |
| S2** | Used for hybrid balance<br>(see Alignment Procedure) | |
| S3** | Impedance selection | |
| | 900 Ohms | C1 |
| | 600 Ohms | C2 |
| W1-3 | Not used | N/A |

* ETVS default setting
** Switch setting

| TYPE | SIGNAL | | | PIN NUMBERS | | | | SIGNAL | | TYPE |
|---|---|---|---|---|---|---|---|---|---|---|
| BUSSED | CARD CAGE ID | CC4 | | 1 | 33 +24 VA | 65 | | FUSE ALARM | | BUSSED |
| " | | CC2 | | 2 | 34 +24 VA | 66 | | CC3 | CARD CAGE ID | " |
| " | | CC0 | | 3 | 35 +24 VA | 67 | | CC1 | CARD CAGE ID | " |
| OPEN | TX 4w /TX/RX LINE 2w | RING | | 4 | 36 +24 VA | 68 | | TIP | TX 4w/TX/RX LINE 2w | OPEN |
| " | RX LINE 4w | RING1 | | 5 | 37 +24 VB | 69 | | TIP1 | 4w RX LINE | " |
| " | | -NC- | | 6 | 38 +24 VB | 70 | | -NC- | | " |
| " | | -NC- | | 7 | 39 +24 VB | 71 | | -NC- | | " |
| " | RECORD | 2 | | 8 | 40 +24 VB | 72 | | 1 | RECORD | " |
| " | | +24 VB | | 9 | 41 +24 VB | 73 | | +24 VB | | " |
| BUSSED | STAT 1 | STO1A- | | 10 | 42 +24 VB | 74 | | STO1A+ | STAT 1 | BUSSED |
| " | STAT 2 | STO2A- | | 11 | 43 +24 VB | 75 | | STO2A+ | STAT 2 | " |
| " | STAT 1 | STO1B- | | 12 | 44 -NC- | 76 | | STO1B+ | STAT 1 | " |
| " | STAT 2 | STO2B- | | 13 | 45 -NC- | 77 | | STO2B+ | STAT 2 | " |
| " | CNTRL 1 | STI1A- | | 14 | 46 PGND | 78 | | STI1A+ | CNTRL 1 | " |
| " | CNTRL 2 | STI2A- | | 15 | 47 " | 79 | | STI2A+ | CNTRL 2 | " |
| " | CNTRL 1 | STI1B- | | 16 | 48 " | 80 | | STI1B+ | CNTRL 1 | " |
| " | CNTRL 2 | STI2B- | | 17 | 49 " | 81 | | STI2B+ | CNTRL 2 | " |
| " | RX VOICE | PCMOA- | | 18 | 50 " | 82 | | PCMOA+ | RX VOICE | " |
| " | RX VOICE | PCMOB- | | 19 | 51 " | 83 | | PCMOB+ | RX VOICE | " |
| " | TX VOICE | PCMIA- | | 20 | 52 " | 84 | | PCMIA+ | TX VOICE | " |
| " | TX VOICE | PCMIB- | | 21 | 53 PGND | 85 | | PCMIB+ | TX VOICE | " |
| " | | FR | OUT | 22 | 54 PGND | 86 | OUT | FR+ | | " |
| " | | 4C- | | 23 | 55 " | 87 | | 4C+ | | " |
| " | | SLOT_ID 2 | | 24 | 56 PGND | 88 | | SLOT_ID 3 | | " |
| " | | SLOT_ID 0 | | 25 | 57 " | 89 | | SLOT_ID 1 | | " |
| OPEN | | | -NC- | 26 | 58 -NC- | 90 | -NC- | | | OPEN |
| " | | | -NC- | 27 | 59 " | 91 | -NC- | | | " |
| BUSSED | RING VOLTAGE | RV2 | | 28 | 60 -NC- | 92 | | RV1 | RING VOLTAGE | BUSSED |
| " | RING VOLTAGE | RV2 | | 29 | 61 " | 93 | | RV1 | RING VOLTAGE | " |
| OPEN | | | -NC- | 30 | 62 -NC- | 94 | -NC- | | | OPEN |
| BUSSED | | DCV- | | 31 | 63 CGND | 95 | | DCV+ | | BUSSED |
| " | CHASSIS GROUND | CGND | | 32 | 64 " | 96 | | CGND | CHASSIS GROUND | " |

## *Figure 5-8. 2/4W PBX Telephone Interface Input and Output Connections*

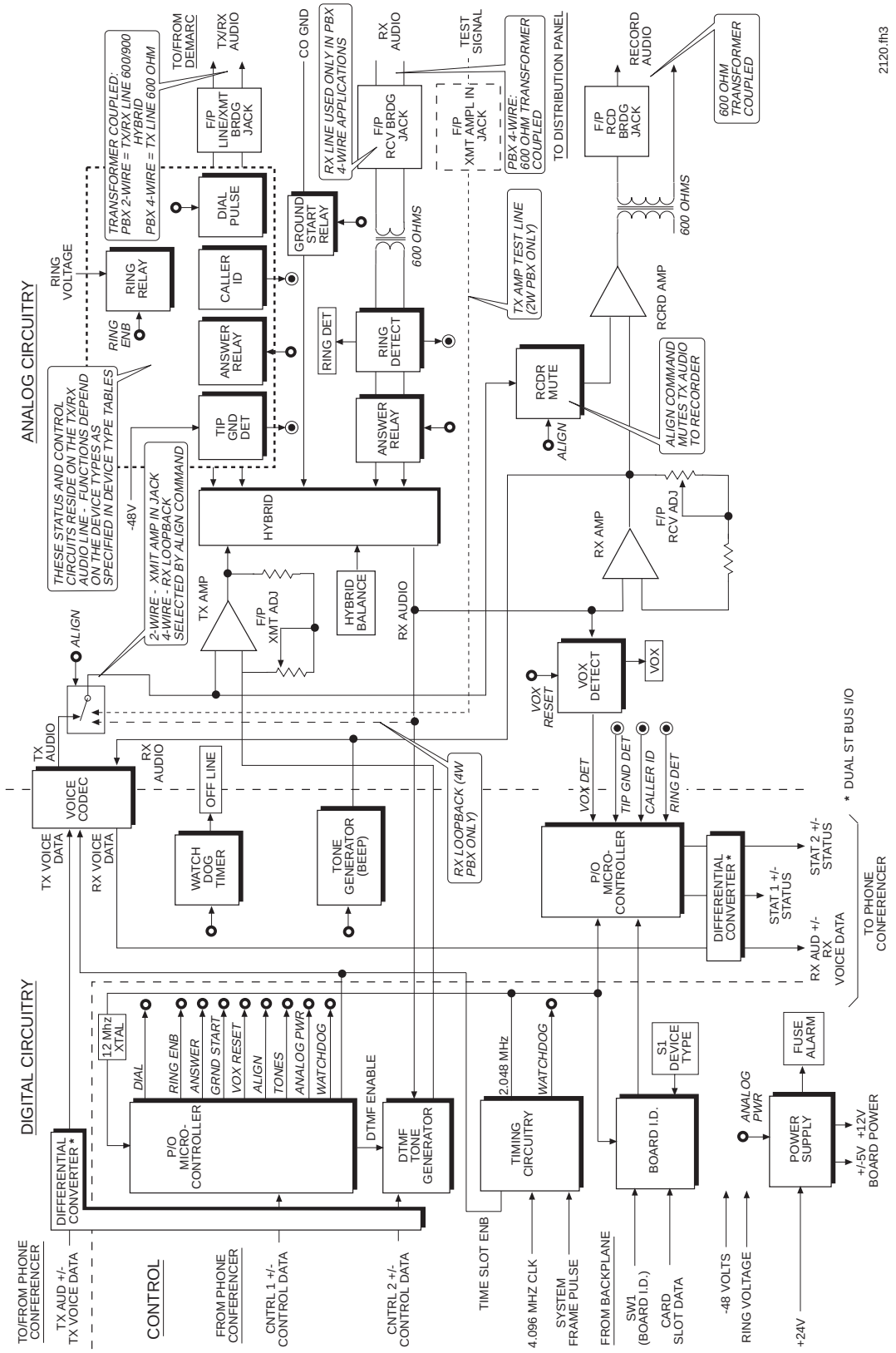


*Figure 5-9. PBX 2- & 4-Wire Interface Functional Block Diagram*

***Analog Transmit Path.*** Both 2-wire and 4-wire PBX cards use the same transmit path. TX analog voice signals, leaving the codec, pass through a switch that normally routes the TX signal to the TX amplifier. If the card is in the align mode, the switch opens the TX path from the codec and no transmission from the position occurs (see Align Mode).

A hybrid transformer couples the output from the TX amplifier to the PBX line at TX AUDIO. A number of PBX line control and status circuits reside on the transmit path. These circuits perform standard PBX line-signaling tasks. Their function in the signal path depends on the device type selected for the card. Enable signals from the on-board micro-controller manage the function of these circuits. These circuits return any status information to the micro-controller which sends it to the Phone Conferencer via STAT 1 & STAT 2. The TX line activity can be monitored at the front panel jack LINE/XMT BRDG.

The gain of the TX amplifier can be adjusted by using the front panel XMT ADJ potentiometer. (Refer to the PBX alignment procedure in Section 6.)

***Transmit Path Signaling Circuits.*** The circuits listed below perform the functions in the TX path as defined.

- Ring Relay—Switches in the ring circuitry and disconnects the transformer.
- Dial Pulse—On PBX 2-wire cards, this circuit closes the line to produce a dial pulse to the central office. On 4-wire cards, the circuit closes the TX loop to produce a dial pulse.
- Ground Start—This circuit initiates an outgoing call by, (1) grounding the ring line, (2) sensing a ground on the tip line from the central office and, (3) closing the answer relay, after detecting the central office ground.
- Answer Relay—Seizes the line in response to a ground-start detection or a loop-start command.

***Analog Receive Path.*** There are two receive paths shown in the block diagram: one for a 2-wire PBX line and the other for a 4-wire PBX line. A 2-wire PBX line uses the line pair to receive. A 4-wire PBX line uses a separate pair for the receive path. 4-wire receive from the demarc connects at RX AUDIO and is coupled through a 600 ohm transformer to the receive amplifier. It bypasses the hybrid. The RX line activity can be monitored at the front panel jack RCV BRDG.

PBX line control and status circuits reside on the receive paths. As in the TX path, these circuits perform standard PBX line-detection tasks and return any status information to the micro-controller which sends it to the Phone Conferencer via STAT 1.

The receive amplifier provides an output to the codec and to the record amplifier (see paragraph 5.4 Recorder Output). The gain of the RX amplifier can be adjusted by using the front panel RCV ADJ potentiometer. (Refer to the PBX alignment procedure in Section 6.)

***Receive Path Detection Circuits.*** The circuits listed below perform the functions in the RX path as defined.

- Answer Relay - Closes line when an incoming call is answered.
- RX Ring Detect - Detects incoming 20 Hz ring signals.
- Caller ID - Detects incoming frequency shift keyed (FSK) signals.

***VOX Detect Circuit (2W & 4W PBX).*** For the voice-in (VOX) mode of operation, the card uses the VOX detect circuit to listen for incoming voice. Incoming voice of -22 dBmO (less than 20 ms attack time) or greater (threshold is -22 dBmO [VOX indicator ON] and -28 dBmO [VOX indicator OFF]) causes the VOX detect circuitry to send a VOX DETECT signal to the micro-controller that is fed back to the position(s) configured for the line to indicate the presence of incoming voice. When the operator answers the call, and the call is later terminated, the micro-controller resets the VOX detect circuit by asserting the VOX RESET control signal. When the circuit is not in use, the RX line is always open to incoming signals. The circuit performs the same function on both the 2-wire and 4-wire PBX cards. Once VOX is detected, a signal of at least -28 dBmO (2 seconds release time) will hold the detect circuit on. The position software routes the voice-in signal to the position loudspeaker in place of chimes. If the call is not answered, and 15 seconds has elapsed without detecting further audio, the software hangs up the call.

***Voice-out (2W & 4W PBX).*** When the position operator selects the line and speaks into the headset, the micro-controller establishes the transmit audio path via the answer relay to the line so that the operator's voice is transmitted to the distant end, initiating the call.

***DTMF Tone Generator.*** This circuit generates outgoing DTMF signals for speed dial calls. (The position electronics generates tones used for touch-tone calls.) The circuit

receives dial-up data from the position via the Operator Processor, control data bus, and Phone Conferencer. When enabled by the micro-controller, the circuit outputs DTMF tones on the TX line based on the speed-dial data received from the system.

When the operator selects the associated line, the interface creates an off-hook condition on the line. The central office detects this line condition and prepares to receive dial tones on the line. After the 200 ms off-hook condition, the PBX Interface establishes a transmit path, via the answer relay, for the DTMF tone generator output to the central office.

***Call Progress and Beep-Tone Generator.*** Generates conference and override notification and record beep tones. The micro-controller enables a conference notification tone when the call is part of a conference setup or when a party is added to a conference. Conference notification is two 440-Hz tones of 200-ms duration separated by 100 ms. It occurs when the card receives dial-code data from the position as part of a conference setup or a party is added to a conference.

The micro-controller enables an override notification if the incoming call has override priority. Override notification is a single 440-Hz tone.

In PBX applications requiring a record beep tone, the micro-controller enables the beep-tone generator when the operator answers an incoming call or places an outgoing call. The resultant 1210-Hz beep-tone signal is output to the recorder demarc at a duty cycle of 600 ms on/15 seconds off. It is also returned to the position headset and transmitted to the distant end.

***Pulse Dial (2W & 4W PBX).*** When the operator selects the associated line, the interface creates an off-hook condition on the line. The central office detects this line condition and prepares to receive dial pulses on the line. One second after off-hook occurs, the micro-controller asserts the pulse-dial relay in preparation to send a pulse-dial signal. When the operator dials the line in pulse-dial mode, the dial code from the position causes the pulse-dial circuit on the interface card to alternately open and close the line loop. The number of times the line is opened and closed corresponds to the value of each digit dialed (0 = 10 pulses). After dialing, the pulse-dial relay releases to complete the audio path for voice.

***Ring Out (4W PBX).*** For interfaces installed as manual ring-out circuits, the operator selects the associated line, the interface creates an off-hook condition on the line. The remote end detects this line condition and prepares to receive a manually controlled ring on the line. After the 200 ms off-hook condition, the micro-controller asserts the

ring relay that switches the ring generator output lines to the line loop. The micro-controller activates a ring-enable switch that connects the ring generator output to the line for as long as the operator depresses the RING key. The switch places a 20 Hz 93 Vrms ring signal on the line.

***Ring In (2W & 4W PBX).*** When the line is not in use, in this operating mode, the RX line is connected to the ring-detect circuitry. If an incoming ring burst of 20 Hz 93 Vrms is detected, the interface front panel RING DET indicator lights and reports the incoming call to the system. Positions configured for the line then display a flashing indicator at the key designated for the line.

When the operator answers the call, an off-hook condition is returned to the distant end, causing the distant-end equipment to remove the ring voltage and establish an audio path. The system software ceases to look for incoming ring once the local operator answers the call.

***Loop Start (2W & 4W PBX).*** For device types that use loop start to initiate a call, the micro-controller closes the answer relay completing a loop circuit that permits the distant end to detect its own -48V line battery and, depending on the device type, complete the audio path for the call or prepare to accept pulse or DTMF dial information.

***Ground-Start Relay.*** For device types that use ground start to initiate a call, the micro-controller closes the answer relay that grounds the "ring" line of a 2-wire PBX circuit. The distant ends senses the ground condition and responds by grounding the "tip" line. The local interface's tip-ground-detect circuit senses the ground condition and completes the audio path for the call or sends pulse or DTMF dial information.

***Caller ID.*** Caller ID only functions on lines over which the central office provides caller ID information code. When the distant end places a call on this type of line, the central office includes the caller ID code after the dial-up signal. The local interface card's caller ID circuitry decodes the information and sends a data stream to the IA Module where the information appears on the Caller ID display.

***Align Mode.*** Position F on the device-type selector, S1, places the interface in the align mode. In this mode, the interface is off-line and set up for test and alignment purposes. On 2-wire interfaces, the align mode opens the TX line from the codec and connects the TX amplifier input to the front panel jack XMT AMPL IN. It also opens the TX line to the record amplifier. In this mode, the technician may insert test signals at XMT AMPL IN to adjust the gain of the TX amplifier using the front panel XMT ADJ potentiometer.

On 4-wire interfaces, the align command causes the RX output from the hybrid to be directly applied to the TX amplifier. It also opens the TX line to the record amplifier.

***Hybrid Balance.*** This circuitry, consisting of a capacitance bridge and potentiometer, permits you to balance the hybrid transformer to the telephone line connected to the interface. Refer to the 2-wire PBX alignment procedure in Section 6.

### 5.4.2 ASU Interface

The ASU Interface is a 2-wire card. **Table 5-10** lists the device-type selections at S1 and **Table 5-11** lists the jumper settings. **Figure 5-10** lists the input and output connections. Refer to **Figure 5-11** for the block diagram.

The three ST data streams to the ASU Interface from the Phone Conferencer, labeled TX AUD, CNTRL 1, and CNTRL 2 in the block diagram, contain data as follows:

| | |
|---|---|
| TX AUD | Transmit voice data |
| CNTRL 1 & CNTRL 2 | Control data— |
| | - Call progress |
| | - VOX reset |
| | - Ring out |
| | - Tone enable |
| | - Power-down |

The three ST data streams to the Phone Conferencer from the ASU Interface labeled RX AUD, STAT 1, and STAT 2 in the block diagram, contain the following data:

| | |
|---|---|
| RX AUD | Receive voice data |
| STAT 1 & STAT 2 | Channel and phone line status— |
| | - VOX detect |
| | - DTMF detect |
| | - Ring trip |
| | - Off-hook |
| | - Board ID and slot information |

### *Table 5-10. ASU Telephone Device Type*

| S1 | SIGNAL IN | SIGNAL OUT | CALL TERM. | BATTERY SOURCE | HYBRID |
|---|---|---|---|---|---|
| 0 | Loop start | 20 Hz auto | Yes | DENRO | Yes |
| 1 | Loop | 20 Hz manual | Yes | DENRO | Yes |
| 3 | VOX | 20 Hz Manual | Yes | DENRO | Yes |
| 4 | VOX | 20 Hz Auto | Yes | DENRO | Yes |
| 5 | Loop Start | Voice | Yes | N/A | Yes |
| 6 | Loop + DTMF | 20 Hz Auto | Yes | DENRO | Yes |
| F | Align Mode | | | | |
| 2, 5, 7-E | Not used | N/A | N/A | N/A | N/A |

### *Table 5-11. ASU Telephone Interface Strapping*

| JUMPER | PURPOSE | STRAPPING |
|---|---|---|
| W3 | Battery + to Transformer: | |
| | Normal | 1-2* |
| | Test | OFF |
| W4 | Battery - to Transformer: | |
| | Normal | 1-2* |
| | Test | OFF |
| W5 | Battery + to CGND: | |
| | Normal | 1-2* |
| | Test | OFF |
| S1** | Device Type (see Table 5-10) | |
| S2** | Used for hybrid balance (see Alignment Procedure) | |
| S3** | Impedance selection | |
| | 900 Ohms | C1 |
| | 600 Ohms | C2 |
| W1, 2 | Not used | N/A |

* ETVS default setting
** Switch setting

| TYPE | SIGNAL | | | PIN NUMBERS | | | | SIGNAL | | TYPE |
|---|---|---|---|---|---|---|---|---|---|---|
| BUSSED | CARD CAGE ID | CC4 | | 1 | 33 | +24 VA | 65 | FUSE ALARM | | BUSSED |
| “ | | CC2 | | 2 | 34 | +24 VA | 66 | CC3 | CARD CAGE ID | “ |
| “ | | CC0 | | 3 | 35 | +24 VA | 67 | CC1 | CARD CAGE ID | “ |
| OPEN | TX/RX LINE (2w) | RING | | 4 | 36 | +24 VA | 68 | TIP | (2w) TX/RX LINE | OPEN |
| “ | | -NC- | | 5 | 37 | +24 VB | 69 | -NC- | | “ |
| “ | | -NC- | | 6 | 38 | +24 VB | 70 | -NC- | | “ |
| “ | | -NC- | | 7 | 39 | +24 VB | 71 | -NC- | | “ |
| “ | RECORD | 2 | | 8 | 40 | +24 VB | 72 | 1 | RECORD | “ |
| “ | | +24 VB | | 9 | 41 | +24 VB | 73 | +24 VB | | “ |
| BUSSED | STAT 1 | STO1A- | | 10 | 42 | +24 VB | 74 | STO1A+ | STAT 1 | BUSSED |
| “ | STAT 2 | STO2A- | | 11 | 43 | +24 VB | 75 | STO2A+ | STAT 2 | “ |
| “ | STAT 1 | STO1B- | | 12 | 44 | -NC- | 76 | STO1B+ | STAT 1 | “ |
| “ | STAT 2 | STO2B- | | 13 | 45 | -NC- | 77 | STO2B+ | STAT 2 | “ |
| “ | CNTRL 1 | STI1A- | | 14 | 46 | PGND | 78 | STI1A+ | CNTRL 1 | “ |
| “ | CNTRL 2 | STI2A- | | 15 | 47 | “ | 79 | STI2A+ | CNTRL 2 | “ |
| “ | CNTRL 1 | STI1B- | | 16 | 48 | “ | 80 | STI1B+ | CNTRL 1 | “ |
| “ | CNTRL 2 | STI2B- | | 17 | 49 | “ | 81 | STI2B+ | CNTRL 2 | “ |
| “ | RX VOICE | PCMOA- | | 18 | 50 | “ | 82 | PCMOA+ | RX VOICE | “ |
| “ | RX VOICE | PCMOB- | | 19 | 51 | “ | 83 | PCMOB+ | RX VOICE | “ |
| “ | TX VOICE | PCMIA- | | 20 | 52 | “ | 84 | PCMIA+ | TX VOICE | “ |
| “ | TX VOICE | PCMIB- | | 21 | 53 | PGND | 85 | PCMIB+ | TX VOICE | “ |
| “ | | FR | OUT | 22 | 54 | PGND | 86 | OUT | FR+ | “ |
| “ | | 4C- | | 23 | 55 | “ | 87 | | 4C+ | “ |
| “ | | SLOT_ID 2 | | 24 | 56 | PGND | 88 | | SLOT_ID 3 | “ |
| “ | | SLOT_ID 0 | | 25 | 57 | “ | 89 | | SLOT_ID 1 | “ |
| OPEN | | | -NC- | 26 | 58 | -NC- | 90 | -NC- | | OPEN |
| “ | | | -NC- | 27 | 59 | “ | 91 | -NC- | | “ |
| BUSSED | RING VOLTAGE | RV2 | | 28 | 60 | -NC- | 92 | RV1 | RING VOLTAGE | BUSSED |
| “ | RING VOLTAGE | RV2 | | 29 | 61 | “ | 93 | RV1 | RING VOLTAGE | “ |
| OPEN | | | -NC- | 30 | 62 | -NC- | 94 | -NC- | | OPEN |
| BUSSED | | DCV- | | 31 | 63 | CGND | 95 | DCV+ | | BUSSED |
| “ | CHASSIS GROUND | CGND | | 32 | 64 | “ | 96 | CGND | CHASSIS GROUND | “ |

***Figure 5-10. ASU Telephone Interface Input and Output Connections***

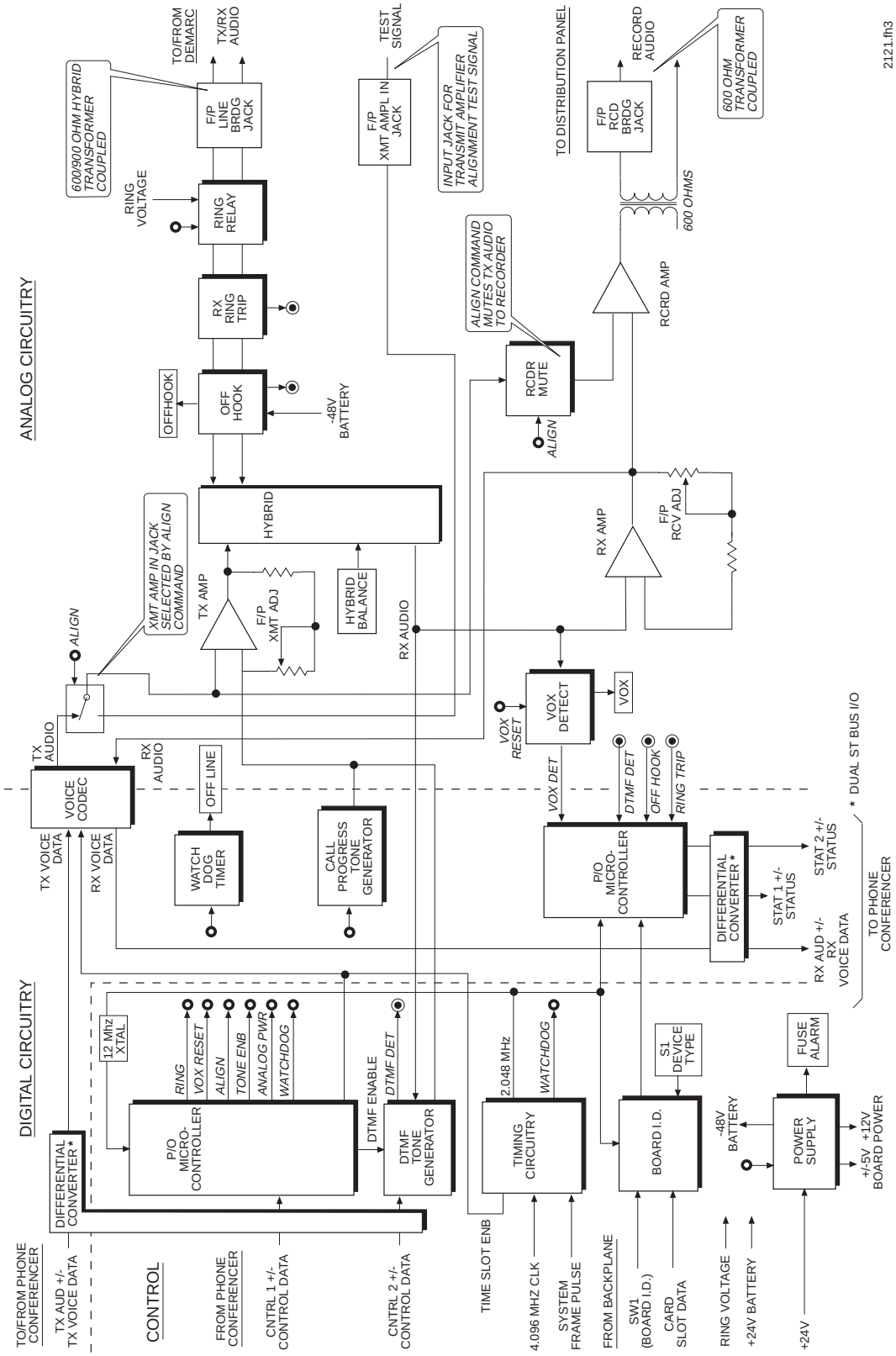


***Figure 5-11. ASU Functional Block Diagram***

The ASU digital circuitry, described in the introduction to the telephone interfaces, is functionally the same as the other telephone cards. The analog circuitry is, however, unique to the card as follows.

***Analog Transmit Path.*** TX analog voice signals, leaving the codec, pass through a switch that normally routes the TX signal to the TX amplifier. If the card is in the align mode, the switch opens the TX path from the codec and no transmission from the position occurs (see Align Mode).

A hybrid transformer couples the output from the TX amplifier to the ASU line at TX AUDIO. A number of ASU line control and status circuits reside on the transmit path. These circuits perform standard ASU line call-signaling tasks. Their function in the signal path depends on the device type selected for the card. Enable signals from the on-board micro-controller manage the function of these circuits. These circuits return any status information to the micro-controller which sends it to the Phone Conferencer via STAT 1 and STAT 2. The TX line activity can be monitored at the front panel jack LINE BRDG.

The gain of the TX amplifier can be adjusted by using the front panel XMT ADJ potentiometer (refer to the ASU alignment procedure in Section 6).

***Transmit Path Call-Signaling Circuits.*** The circuits listed below perform the functions in the TX path as defined.

- Ring Relay—In response to a line select command from the position, this circuit seizes the TX line and places a 20-Hz manual ring signal on the line.

***Analog Receive Path.*** The ASU uses the same pair to transmit and receive. The hybrid transformer couples the RX path to the RX amplifier input at 600 ohms. The RX line activity can be monitored at the front panel jack LINE BRDG.

ASU line control and status circuits reside on the receive paths. As in the TX path, these circuits perform standard ASU line call-progress tasks and return any status information to the micro-controller, which sends it to the Phone Conferencer via STAT 1.

The receive amplifier provides an output to the codec and to the record amplifier (see paragraph 5.4 Recorder Output). The gain of the RX amplifier can be adjusted by using the front panel RCV ADJ potentiometer. (Refer to the ASU alignment procedure in Section 6.)

***Receive Path Call-Progress Circuits.*** The circuits listed below perform the functions in the RX path as defined.

- RX Ring Trip—Terminates ring cycle when distant end answers the call.

- Offhook—In response to a line select command from the position, this circuit provides an offhook indication at the position and the unit front panel.

***Loop + VOX-Detect Circuit.*** For the voice-in (VOX) mode of operation, the card must first sense an off-hook condition from the distant end. It then uses the VOX-detect circuit to listen for incoming voice. Incoming voice of -22 dBmO (less than 20 ms attack time) or greater (threshold is -22 dBmO [VOX indicator ON] and -28 dBmO [VOX indicator OFF])causes the VOX detect circuitry to send a VOX-DETECT signal to the micro-controller that is fed back to the position(s) configured for the line to indicate the presence of incoming voice. When the operator answers the call, and the call is later terminated, the micro-controller resets the VOX-detect circuit by asserting the VOX RESET control signal. When the circuit is not in use, the RX line is always open to incoming signals. Once VOX is detected, a signal of at least
-28 dBmO (2 seconds release time) will hold the detect circuit on. The position software routes the voice-in signal to the position loudspeaker in place of chimes. If the call is not answered, and 15 seconds has elapsed without detecting further audio, the software hangs up the call.

***DTMF Tone Detect.*** The DTMF tone-detect circuit detects incoming DTMF for dial-in circuits. When enabled by the micro-controller, the circuit decodes incoming tones input to the circuit from the RX line. Acknowledged incoming DTMF numbers cause the circuit to generate a DTMF-detect signal to the micro-controller that is sent to the positions, via the Phone Conferencer, control data bus, and Operator Processors. The positions configured for the dial code provide an indication at the key designated for the line.

***Call Progress and Beep-Tone Generator.*** Generates conference and override notification and record beep tones. The micro-controller enables a conference notification tone when the call is part of a conference setup or when a party is added to a conference. Conference notification is two 440-Hz tones of 200-ms duration separated by 100 ms. It occurs when the card receives dial-code data from the position as part of a conference setup or a party is added to a conference.

The micro-controller enables an override notification if the incoming call has override priority. Override notification is a single 440-Hz tone.

***Auto Ring Out.*** If the interface card is set up for auto-ring mode, the micro-controller causes the output of the ring generator to be placed on the line as soon as it receives the command to place the interface on-line. Auto ring is a 20-Hz signal of 2-seconds-on and 4-seconds-off duty cycle. When the distant end answers the call, the interface detects an off-hook condition at the distant end that is detected by the RX ring-trip circuit. In response, the micro-controller turns off the ring output and establishes the audio path for voice communications.

***Manual Ring Out.*** For interfaces installed as manual ring-out circuits, the operator selects the associated line, the interface creates an off-hook condition on the line. The central office detects this line condition and prepares to receive a manually controlled ring on the line. One second after off-hook occurs, the micro-controller asserts the ring relay that switches the ring generator output lines to the line loop. The micro-controller activates a ring-enable switch that connects the ring generator output to the line. The switch places a 20-Hz 93 Vrms ring signal on the line for as long as the operator depresses the RING key.

***Loop Start.*** For device types that require loop start to recognize an incoming call, the interface supplies -48V to one side of the line. When the distant end goes off-hook and completes the loop, the interface's off-hook detect circuit senses the -48V returned from the distant end. The OFFHOOK indicator on the front panel illuminates and an off-hook message is reported to the system. Positions configured for the line then display a flashing indicator at the key designated for the line.

***Align Mode.*** Position F on the device-type selector, S1, places the interface in the align mode. In this mode, the interface is off-line and set up for test and alignment purposes. The align mode opens the TX line from the codec and connects the TX amplifier input to the front panel jack XMT AMPL IN. It also opens the TX line to the record amplifier. In this mode, the technician may insert test signals at XMT AMPL IN to adjust the gain of the TX amplifier, using the front panel XMT ADJ potentiometer.

***Hybrid Balance.*** This circuitry, consisting of a capacitance bridge and potentiometer, permits the balancing of the hybrid transformer to the telephone line connected to the interface. (Refer to the ASU alignment procedure in Section 6.)

### 5.4.3 Phone E&M Interface

The E&M Interface is a 4/6/8-wire card. **Table 5-12** lists the device-type selections at S1 and **Table 5-13** lists the jumper settings. **Figure 5-12** lists the input and output connections. Refer to **Figure 5-13** for the block diagram.

***Table 5-12. E&M Telephone Device Type***

| S1 | SIGNAL IN | SIGNAL OUT | CALL TERM. | BATTERY SOURCE | HYBRID |
|---|---|---|---|---|---|
| 0 | E-lead (Voice In) | M-lead (Voice Out) | Yes | Strapped | No |
| 1 | Tone-on-idle | Tone-on-idle | Yes | None | No |
| 2 | Tone-on-active | Tone-on-active | Yes | None | No |
| 3 | Tone-on-idle + SF pulse | Tone-on-idle + SF pulse | Yes | None | No |
| 4 | Tone-on-idle + DTMF | Tone-on-idle + DTMF | Yes | None | No |
| 5 | E-lead + pulse | M-lead + pulse | Yes | Strapped | No |
| 6 | E-lead + DTMF | M-lead + DTMF | Yes | Strapped | No |
| F | Align Mode | | | | |
| 7-E | Not used | N/A | N/A | N/A | N/A |

TX AUD, CNTRL 1, and CNTRL 2 in the block diagram, contain data as follows:

| | |
|---|---|
| TX AUD | Transmit voice data |
| CNTRL 1 and CNTRL 2 | Control data— |
| | - Single frequency (SF) enable |
| | - Tone enable |
| | - Align mode |
| | - DTMF data |

The three ST data streams to the Phone Conferencer from the E&M Interface labeled RX AUD, STAT 1, and STAT 2 in the block diagram, contain the following data:

| | |
|---|---|
| RX AUD | Receive voice data |
| STAT 1 and STAT 2 | Channel and phone line status— |
| | - Tone detect |
| | - DTMF detect |

***Table 5-13. E&M Telephone Interface Strapping***

| JUMPER | PURPOSE (Note 1) | STRAPPING |
|---|---|---|
| W3 | Type 1, trunk & signal side<br>Type 2, trunk & signal side | 2-3<br>1-2 |
| W4 | Type 1, trunk & signal side<br>Type 2, trunk side<br>Type 2, signal side | 2-3<br>1-2<br>2-3 |
| S2** | Tone selection: 2400 Hz<br>2600 Hz | C2<br>C1 |
| S3** | Type 1, trunk & signal side<br>Type 2, trunk side<br>Type 2, signal side | C2 position<br>C2 position<br>C1 position |
| S4** | Type 1, trunk side<br>Type 1, signal side<br>Type 2, trunk & signal side | C1 position<br>C2 position<br>C2 position |
| S5** | Type 1, trunk side<br>Type 1, signal side<br>Type 2, trunk side<br>Type 2, signal side | C1 position<br>C2 position<br>C1 position<br>C2 position |
| S1** | Device Type<br>(see Table 5-12. E&M Telephone Device Type) | |
| W1, 2 | Not used | N/A |

** Switch setting

Note 1: The following sketch provides a definition of the Type 1 and Type 2 E&M Lead Signalling Interfaces (and circuits) referred to in the PURPOSE column of **Table 5-13** above.

STAT 1 AND STAT 2 (Continued) - SF frequency detect

- E-lead detect

STAT 2 Interface status -

- Board ID

The E&M digital circuitry, described in the introduction to the telephone interfaces, is functionally the same as the other telephone cards. The analog circuitry is, however, unique to the card as follows:

***Analog Transmit Path.*** TX analog voice signals, leaving the codec, pass through a switch that normally routes the TX signal to the TX amplifier. If the card is in the align mode, the switch opens the TX path from the codec and no transmission from the position occurs (see Align Mode).

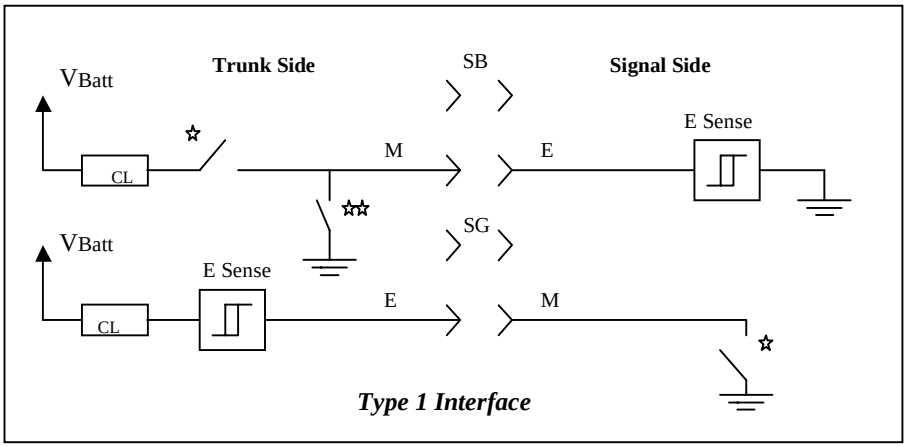


***Type 1 Interface***

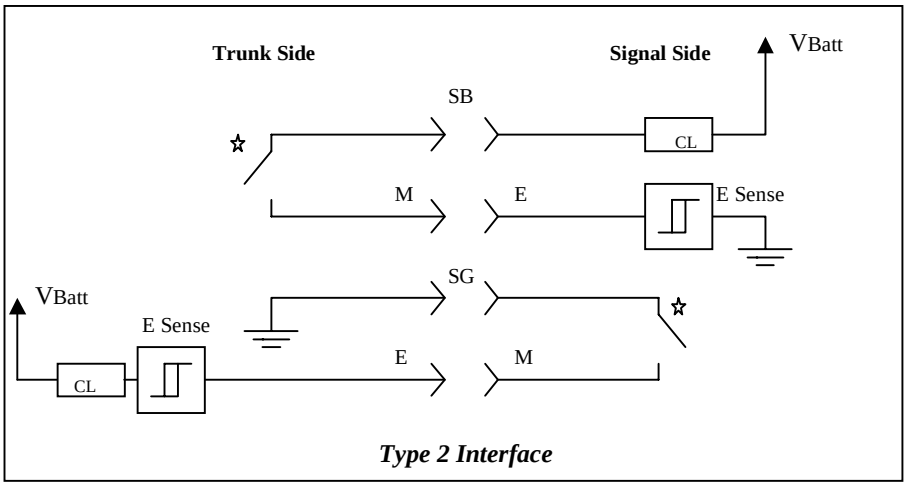


***Type 2 Interface***

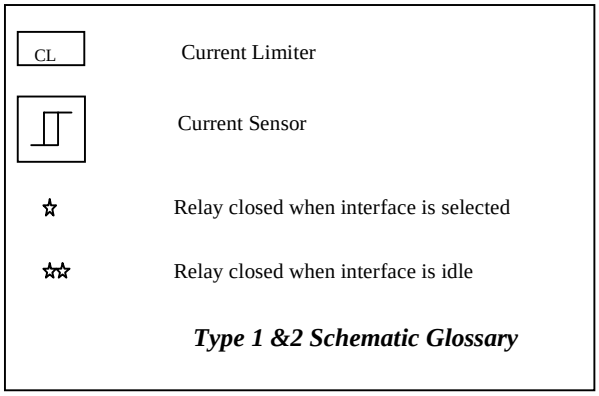


***Type 1 &2 Schematic Glossary***

| TYPE | SIGNAL | | | PIN NUMBERS | | | | SIGNAL | | TYPE |
|---|---|---|---|---|---|---|---|---|---|---|
| BUSSED | CARD CAGE ID | CC4 | | 1 | 33 +24 VA | 65 | | FUSE ALARM | | BUSSED |
| “ | | CC2 | | 2 | 34 +24 VA | 66 | | CC3 | CARD CAGE ID | “ |
| “ | | CC0 | | 3 | 35 +24 VA | 67 | | CC1 | CARD CAGE ID | “ |
| OPEN | TX LINE | RING | | 4 | 36 +24 VA | 68 | | TIP | TX LINE | OPEN |
| “ | RX LINE | RING1 | | 5 | 37 +24 VB | 69 | | TIP1 | RX LINE | “ |
| “ | | M-LEAD | | 6 | 38 +24 VB | 70 | | E-LEAD | | “ |
| “ | | SG-LEAD | | 7 | 39 +24 VB | 71 | | SB-LEAD | | “ |
| “ | RECORD | 2 | | 8 | 40 +24 VB | 72 | | 1 | RECORD | “ |
| “ | | +24 VB | | 9 | 41 +24 VB | 73 | | +24 VB | | “ |
| BUSSED | STAT 1 | STO1A- | | 10 | 42 +24 VB | 74 | | STO1A+ | STAT 1 | BUSSED |
| “ | STAT 2 | STO2A- | | 11 | 43 +24 VB | 75 | | STO2A+ | STAT 2 | “ |
| “ | STAT 1 | STO1B- | | 12 | 44 -NC- | 76 | | STO1B+ | STAT 1 | “ |
| “ | STAT 2 | STO2B- | | 13 | 45 -NC- | 77 | | STO2B+ | STAT 2 | “ |
| “ | CNTRL 1 | STI1A- | | 14 | 46 PGND | 78 | | STI1A+ | CNTRL 1 | “ |
| “ | CNTRL 2 | STI2A- | | 15 | 47 “ | 79 | | STI2A+ | CNTRL 2 | “ |
| “ | CNTRL 1 | STI1B- | | 16 | 48 “ | 80 | | STI1B+ | CNTRL 1 | “ |
| “ | CNTRL 2 | STI2B- | | 17 | 49 “ | 81 | | STI2B+ | CNTRL 2 | “ |
| “ | RX VOICE | PCMOA- | | 18 | 50 “ | 82 | | PCMOA+ | RX VOICE | “ |
| “ | RX VOICE | PCMOB- | | 19 | 51 “ | 83 | | PCMOB+ | RX VOICE | “ |
| “ | TX VOICE | PCMIA- | | 20 | 52 “ | 84 | | PCMIA+ | TX VOICE | “ |
| “ | TX VOICE | PCMIB- | | 21 | 53 PGND | 85 | | PCMIB+ | TX VOICE | “ |
| “ | | FR | OUT | 22 | 54 PGND | 86 | OUT | FR+ | | “ |
| “ | | 4C- | | 23 | 55 “ | 87 | | 4C+ | | “ |
| “ | | SLOT_ID 2 | | 24 | 56 PGND | 88 | | SLOT_ID 3 | | “ |
| “ | | SLOT_ID 0 | | 25 | 57 “ | 89 | | SLOT_ID 1 | | “ |
| OPEN | | | -NC- | 26 | 58 -NC- | 90 | -NC- | | | OPEN |
| “ | | | -NC- | 27 | 59 “ | 91 | -NC- | | | “ |
| BUSSED | RING VOLTAGE | RV2 | | 28 | 60 -NC- | 92 | | RV1 | RING VOLTAGE | BUSSED |
| “ | RING VOLTAGE | RV2 | | 29 | 61 “ | 93 | | RV1 | RING VOLTAGE | “ |
| OPEN | | | -NC- | 30 | 62 -NC- | 94 | -NC- | | | OPEN |
| BUSSED | | DCV- | | 31 | 63 CGND | 95 | | DCV+ | | BUSSED |
| “ | CHASSIS GROUND | CGND | | 32 | 64 “ | 96 | | CGND | CHASSIS GROUND | “ |

***Figure 5-12. E&M Telephone Interface Input and Output Connections***

The analog output from the TX amplifier passes through a low-pass filter and is coupled via a 600-ohm transformer to the E&M telephone line at TX AUDIO. You can monitor the TX line activity at the front panel jack XMT BRDG.

The gain of the TX amplifier can be adjusted by using the front panel XMT ADJ potentiometer. (Refer to the E&M alignment procedure in Section 6.)

***Analog Receive Path.*** RX voice from the demarc enters the card at RX AUDIO. A 600-ohm transformer couples the RX path to the RX amplifier. The RX line activity can be monitored at the front panel jack RCV BRDG.

The receive amplifier provides an output to the codec that passes through the contacts of an SF-select relay. Except during SF signaling activity, this relay completes the RX path from the RX amplifier to the codec. During SF signaling activity, the relay connects the I/O of the tones generator and detector circuitry to the RX line (see SF Tone Generation). A portion of the RX amplifier output is also applied to the record amplifier (see paragraph 5.4 Recorder Output). The gain of the RX amplifier can be adjusted by using the front panel RCV ADJ potentiometer. (Refer to the E&M alignment procedure in Section 6.)

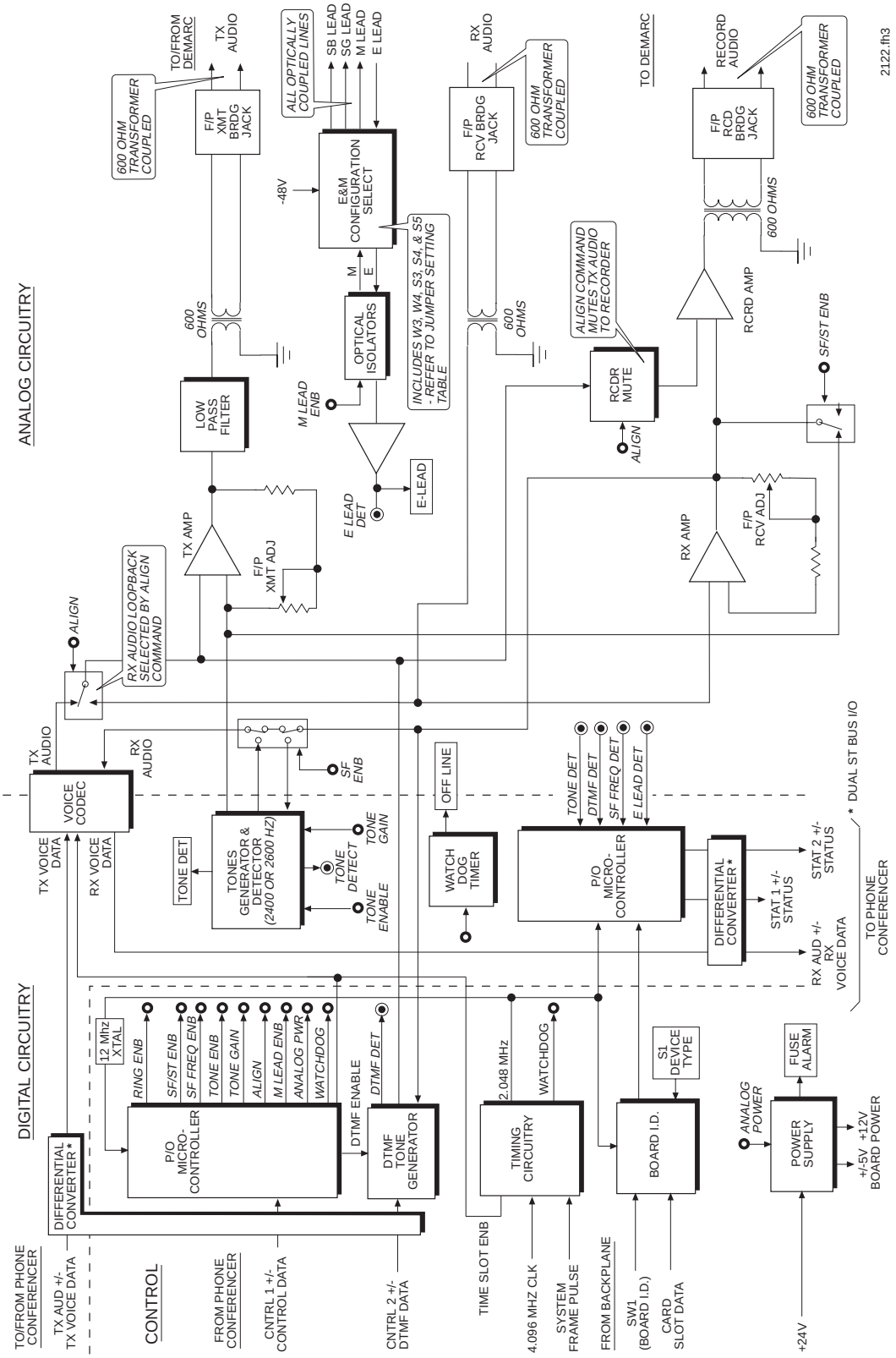


***Figure 5-13. E&M Functional Block Diagram***

***Tone-On-Idle Signaling and Detection.*** For this mode of operation, the SF tones generation and detection circuitry generates a constant 2400 Hz (+ 4 Hz) or 2600 Hz (+ 4 Hz) SF tone that is transmitted to the distant end on the TX pair when the line is not in use. When the operator selects the line, the micro-controller causes the tone to be removed from the TX pair, alerting the distant end that an incoming call is on the line. The distant end responds by removing the SF tone from the interface's E-lead. The interface's SF-detect circuitry senses the absence of the tone and the micro-controller reports that the call has been completed.

For incoming calls, as long as the tone from the distant end is on the line, the SF detection circuitry continues to monitor the line. As soon as the distant end removes the tone, the SF-detect circuitry detects its absence and notifies the micro-controller that an incoming call is present. The micro-controller broadcasts a call present message on the control data bus and removes the tone when an operator answers the incoming call. The positions configured for the line respond by indicating the call-present at the key designated for the line.

***Tone-On-Active Signaling and Detection.*** Interfaces of this device type function the same as for tone-on-idle except that no tone is on the line while it is idle. An SF tone is placed on the line when a call is made.

During normal voice communication, RX voice bypasses all SF circuitry by the action of the SF-enable relay contacts that connect the audio directly to the codec. When in SF mode (tone-on-idle/active), the micro-controller SF ENB signal to the relay causes the relay to place the detector circuit in the RX voice path to detect and notch incoming SF signals. When the distant end sends an SF signal, it is detected by the SF-detect circuitry and the micro-controller sends a call-present message via the Phone Conferencer, that is broadcast over control data bus to the Operator Processor and positions. The positions configured for the line provide an indication at the key designated for the line. When the local operator answers the call, the micro-controller sends an SF signal to the distant end indicating that the call has been answered.

***SF Tone Generation.*** SF tone generation sums either a 2400 Hz or 2600 Hz tone (switch selectable) to the transmit amplifier. Before summing the SF tone, the micro-controller selects between two different gain settings (-8dBmO for first 300 ms followed by -20dBmO for remainder of tone duration). In addition, the micro-controller has ability to enable/disable the tone.

***SF Tone Detection.*** SF-detect circuitry detects either 2400 Hz or 2600 Hz tones (switch selectable) within ±15 Hz at a level of no less than -30dBmO. This SF tone is received on the same line as the voice audio but is notched out before the voice is digitized.

***E-, M-, Sb-, and SG-Lead Signaling.*** The E&M unit can be configured for E-lead and M-lead signaling. In a back-to-back configuration, the E-lead connects to the M-lead port at the distant end and the M-lead to the E-lead at the distant end.

When the line is idle, the M-lead is placed at -48V DC or ground (switch selectable). When the position operator accesses the line to place a call, the micro-controller instructs the E&M circuitry to place the M-lead in the opposite state. This change in state is recognized by the E-lead at the distant end.

For incoming calls, the E-lead is waiting for either a ground condition or -48V (switch selectable) from the distant end to indicate a call is present. When this occurs, the E&M circuitry detects the change in state and notifies the micro-controller that an incoming call is present. It also lights the E-LEAD indicator on the front panel until the call is answered. In response, the micro-controller sends a call-present message via the Phone Conferencer that is broadcast over the control data bus to the Operator Processor and positions. The positions configured for the line provide an indication at the key designated for the line.

***DTMF Tone Generator.*** This circuit generates outgoing DTMF signals for speed dial calls. (The position electronics generates tones used for touch tone calls.) The circuit receives dial-up data from the position via the Operator Processor, control data bus, and Phone Conferencer. When enabled by the micro-controller, the circuit outputs DTMF tones on the TX line based on the speed-dial data received from the system.

When the operator selects the associated line, the interface creates an off-hook condition on the line. The central office detects this line condition and prepares to receive dial tones on the line. After the 200 ms off-hook condition, the PBX Interface establishes a transmit path, via the answer relay, for the DTMF tone generator output to the central office.

***DTMF Tone Detect.*** The DTMF tone-detect circuit detects incoming DTMF for dial-in circuits. When enabled by the micro-controller, the circuit decodes incoming tones input to the circuit from the RX line. Acknowledged incoming DTMF numbers cause the circuit to generate a DTMF detect signal to the micro-controller that is sent to the positions, via the Phone Conferencer, control data bus, and Operator Processors. The positions configured for the dial code provide an indication at the key designated for the line.

***Pulse Dial.*** There are two types of pulse dialing: one by pulsing the M-lead signal, the other by pulsing the SF tone. When selecting the line, normal E&M or SF signaling starts. The operator then begins to dial digits and the micro-controller interrupts M-lead signals (or SF tones) corresponding to the value of each digit (0=10 pulses). The distant end first detects the line seizure and then receives pulses and determines if the pulse characteristics are valid. If so, the digit information is passed to the micro-controller. In response, the micro-controller sends an incoming call message to each position configured for the line.

***Align Mode.*** Position F on the device-type selector, S1, places the interface in the align mode. In this mode, the interface is off-line and set up for test and alignment purposes. The align mode opens the TX line from the codec and connects the output from the 600 ohm transformer in the RX path directly to the input to the TX amplifier. It also opens the TX line to the record amplifier. In this mode, the technician may loopback test signals on the RX path to the TX path.

### 5.4.4 SS-1/4 Interface

The SS-1/4 Interface is a 4/6/8-wire card. **Table 5-14** lists the device-type selections at S1 and **Table 5-15** lists the jumper settings. **Figure 5-14** lists the input and output connections. Refer to **Figure 5-15** for the block diagram. The card design supports both SS-1 and SS-4 telephone lines as selected by S1.

***Table 5-14. SS-1 Telephone Device Type***

| S1 | SIGNAL IN | SIGNAL OUT | CALL TERM. | BATTERY SOURCE | HYBRID |
|---|---|---|---|---|---|
| 0 | 2-digit SS dial | SS dial | No | None | No |
| 1 | 3-digit SS dial | SS dial | No | None | No |
| 2 | 2-digit SS dial | Voice | No | None | No |
| 3 | 3-digit SS dial | Voice | No | None | No |
| 4 | VOX | SS dial | No | None | No |
| 7 | 2-digit SS dial | SS dial/voice | No | None | No |
| 8 | 3-digit SS dial | SS dial/voice | No | None | No |
| F | Align Mode | | | | |
| 5, 6, 9-E | Not used | N/A | N/A | N/A | N/A |

***Table 5-15. SS-1 Telephone Interface Strapping***

| JUMPER | PURPOSE | STRAPPING |
|---|---|---|
| S1** | Device Type (see Table 5-14. SS-1 Telephone Device Type) | |
| W2 | Not installed | N/A |

** Switch setting

The three ST data streams to the SS-1/4 Interface from the Phone Conferencer, labeled TX AUD, CNTRL 1, and CNTRL 2 in the block diagram, contain data as follows:

| | |
|---|---|
| TX AUD | Transmit voice data |
| CNTRL 1 | Control data—<br>- Zip tone enable<br>- VOX reset |

- SS-1 tone select
- SS-1 tone enable
- Align mode
- Power-down

CNTRL 2 — Not used

| TYPE | SIGNAL | | | PIN NUMBERS | | | | SIGNAL | | TYPE |
|---|---|---|---|---|---|---|---|---|---|---|
| BUSSED | CARD CAGE ID | CG4 | | 1 | 33 | +24 VA | 65 | FUSE ALARM | | BUSSED |
| “ | | CG2 | | 2 | 34 | +24 VA | 66 | CG3 | CARD CAGE ID | “ |
| “ | | CG0 | | 3 | 35 | +24 VA | 67 | CG1 | CARD CAGE ID | “ |
| OPEN | TX LINE | RING | | 4 | 36 | +24 VA | 68 | TIP | TX LINE | OPEN |
| “ | RX LINE | RING1 | | 5 | 37 | +24 VB | 69 | TIP1 | RX LINE | “ |
| “ | | | -NC- | 6 | 38 | +24 VB | 70 | -NC- | | “ |
| “ | | | -NC- | 7 | 39 | +24 VB | 71 | -NC- | | “ |
| “ | RECORD | 2 | | 8 | 40 | +24 VB | 72 | 1 | RECORD | “ |
| “ | | +24 VB | | 9 | 41 | +24 VB | 73 | +24 VB | | “ |
| BUSSED | STAT 1 | STO1A- | | 10 | 42 | +24 VB | 74 | STO1A+ | STAT 1 | BUSSED |
| “ | STAT 2 | STO2A- | | 11 | 43 | +24 VB | 75 | STO2A+ | STAT 2 | “ |
| “ | STAT 1 | STO1B- | | 12 | 44 | -NC- | 76 | STO1B+ | STAT 1 | “ |
| “ | STAT 2 | STO2B- | | 13 | 45 | -NC- | 77 | STO2B+ | STAT 2 | “ |
| “ | CNTRL 1 | STI1A- | | 14 | 46 | PGND | 78 | STI1A+ | CNTRL 1 | “ |
| “ | CNTRL 2 | STI2A- | | 15 | 47 | “ | 79 | STI2A+ | CNTRL 2 | “ |
| “ | CNTRL 1 | STI1B- | | 16 | 48 | “ | 80 | STI1B+ | CNTRL 1 | “ |
| “ | CNTRL 2 | STI2B- | | 17 | 49 | “ | 81 | STI2B+ | CNTRL 2 | “ |
| “ | RX VOICE | PCMOA- | | 18 | 50 | “ | 82 | PCMOA+ | RX VOICE | “ |
| “ | RX VOICE | PCMOB- | | 19 | 51 | “ | 83 | PCMOB+ | RX VOICE | “ |
| “ | TX VOICE | PCMIA- | | 20 | 52 | “ | 84 | PCMIA+ | TX VOICE | “ |
| “ | TX VOICE | PCMIB- | | 21 | 53 | PGND | 85 | PCMIB+ | TX VOICE | “ |
| “ | | FR | | 22 | 54 | PGND | 86 | FR+ | | “ |
| “ | | 4C- | | 23 | 55 | “ | 87 | 4C+ | | “ |
| “ | | SLOT_ID 2 | | 24 | 56 | PGND | 88 | SLOT_ID 3 | | “ |
| “ | | SLOT_ID 0 | | 25 | 57 | “ | 89 | SLOT_ID 1 | | “ |
| OPEN | | | -NC- | 26 | 58 | -NC- | 90 | -NC- | | OPEN |
| “ | | | -NC- | 27 | 59 | “ | 91 | -NC- | | “ |
| BUSSED | | | -NC- | 28 | 60 | -NC- | 92 | -NC- | | BUSSED |
| “ | | | -NC- | 29 | 61 | “ | 93 | -NC- | | “ |
| OPEN | | | -NC- | 30 | 62 | -NC- | 94 | -NC- | | OPEN |
| BUSSED | | DCV- | | 31 | 63 | CGND | 95 | DCV+ | | BUSSED |
| “ | CHASSIS GROUND | CGND | | 32 | 64 | “ | 96 | CGND | CHASSIS GROUND | “ |

***Figure 5-14. SS-1/4 Telephone Interface Input and Output Connections***

The three ST data streams to the Phone Conferencer from the SS-1/4 Interface labeled RX AUD, STAT 1, and STAT 2 in the block diagram, contain the following data:

RX AUD — Receive voice data

STAT 1 and STAT 2 — Channel and phone line status—

- VOX detect
- SS-1 tone detect

Interface status -

- Board ID

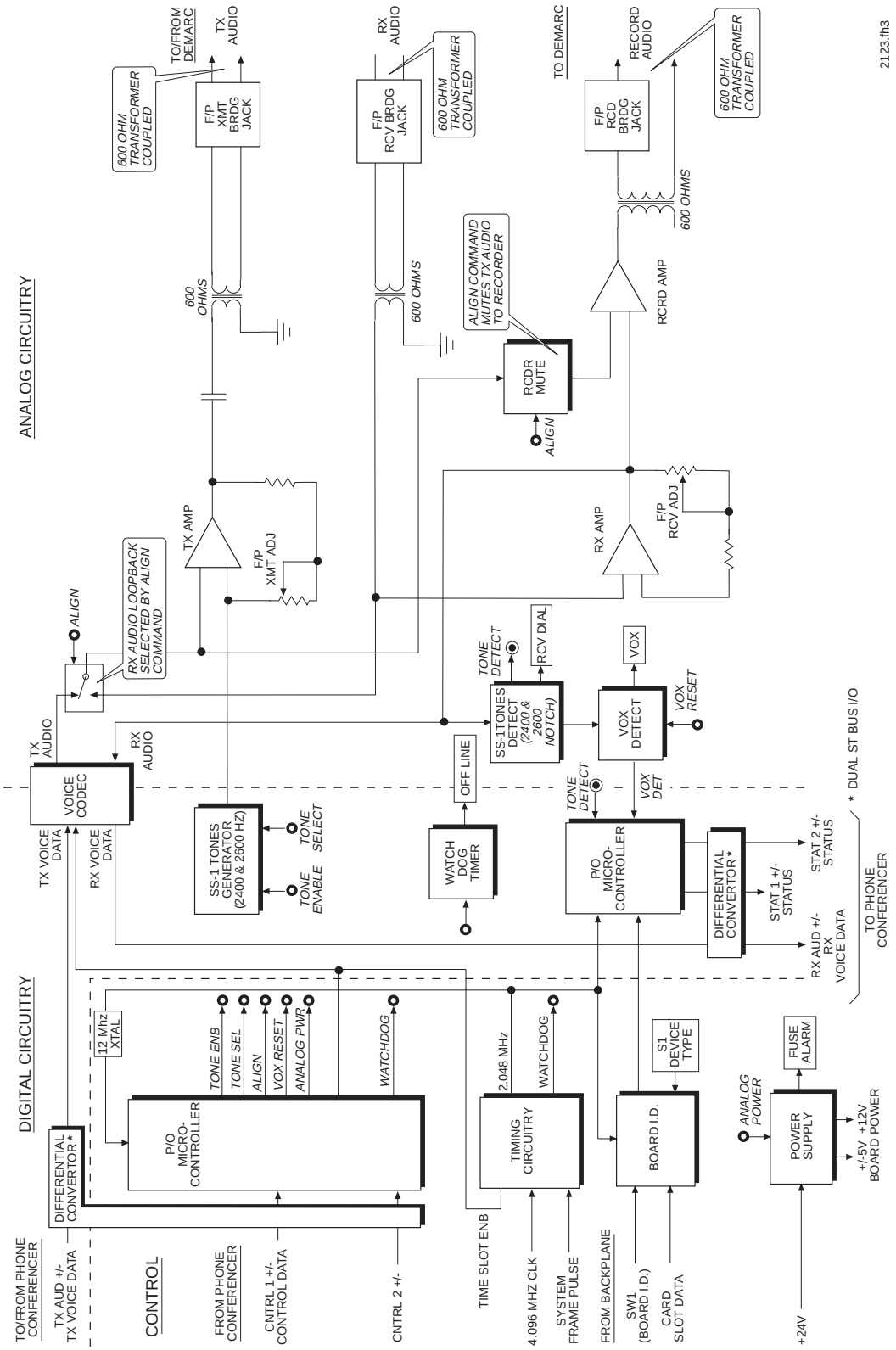


*Figure 5-15. SS-1 Functional Block Diagram*

The SS-1/4 digital circuitry, described in the introduction to the telephone interfaces, is functionally the same as the other telephone cards. The analog circuitry is however unique to the card as explained in the following paragraphs:

***Analog Transmit Path.*** TX analog voice signals, leaving the codec, pass through a switch that normally routes the TX signal to the TX amplifier. If the card is in the align mode, the switch opens the path and no transmission from the position occurs (see Align Mode).

The analog output from the TX amplifier is AC-coupled to a 600-ohm transformer and the SS-1/4 telephone line at TX AUDIO. The TX line activity can be monitored at the front panel jack XMT BRDG.

The gain of the TX amplifier can be adjusted by using the front panel XMT ADJ potentiometer. (Refer to the SS-1/4 alignment procedure in Section 6.)

***Analog Receive Path.*** RX voice from the demarc enters the card at RX AUDIO. A 600-ohm transformer couples the RX path to the RX amplifier. The RX line activity can be monitored at the front panel jack RCV BRDG.

A portion of the RX amplifier output is applied to the codec and the record amplifier (see paragraph 5.4 Recorder Output). The gain of the RX amplifier can be adjusted by using the front panel RCV ADJ potentiometer. (Refer to the SS-1/4 alignment procedure in Section 6.)

***SS-1 FSK Tones Generation and Detection Circuitry.*** This circuitry generates outgoing SS-1 signaling tones and detects the presence of incoming SS-1 signaling for dial-in and dial-out modes of operation. The tones generator produces 2400- and 2600-Hz tones continuously. When the interface receives a dial-out command, the micro-controller enables the generator output. Alternating 2600-Hz and 2400-Hz tone transmissions, starting with a 2600-Hz tone of 100 ms duration and followed by a series of tone shifts between 2400 Hz of 33 ms duration and 2600 Hz of 67 ms duration. The number of tone shifts after the first 2600-Hz tone of 100 ms depends on the value of the dial-code data received from the operator processor via the control data bus and the Phone Conferencer; and developed from the 2- or 3-digit code the operator dials at the position's DTMF keypad. A simulated-sidetone signal at the position speaker enables the calling operator to hear these tones during the dial-out event. When dial-out is completed, the interface establishes the audio path for voice communication when the distant end answers.

The tones-detect circuit recognizes incoming 2600/2400-Hz tone shifts and measures the duration of each to count the number of tone pairs received. A front panel RCV DIAL indicator illuminates for each tone pair. The micro-controller counts the number of tone

transitions received and converts the information to digital code that is broadcast over the control data bus via the Phone Conferencer. The position configured for that code indicates the incoming call at the key designated for that line. If the position operator does not answer the call within 30 seconds, the interface releases the incoming call.

***VOX-Detect Circuit.*** For the voice-in (VOX) mode of operation, the card uses the VOX-detect circuit to listen for incoming voice. Incoming voice of -22 dBmO (less than 20 ms attack time) or greater ( threshold is -22 dBmO [VOX indicator ON] and -28 dBmO [VOX indicator OFF]) causes the VOX-detect circuitry to send a VOX-DETECT signal to the micro-controller that is fed back to the position(s) configured for the line to indicate the presence of incoming voice. When the operator answers the call, and the call is later terminated, the micro-controller resets the VOX-detect circuit by asserting the VOX RESET control signal. When the circuit is not in use, the RX line is always open to incoming signals. Once VOX is detected, a signal of at least -28 dBmO (2 seconds release time) will hold the detect circuit on. The position software routes the voice-in signal to the position loudspeaker in place of chimes. If the call is not answered, and 15 seconds has elapsed without detecting further audio, the software hangs up the call.

***Voice-out.*** When the position operator selects the line, the micro-controller establishes the transmit audio path so that the operator's voice is transmitted to the distant end, initiating the call.

***Align Mode.*** Position F on the device-type selector, S1, places the interface in the align mode. In this mode, the interface is off-line and set up for test and alignment purposes. The align mode opens the TX line from the codec and connects the output from the 600-ohm transformer in the RX path directly to the input to the TX amplifier. It also opens the TX line to the record amplifier. In this mode, the technician may loopback test signals on the RX path to the TX path.

## 5.5 RING GENERATOR UNIT

The Ring Generator card supplies the 20-Hz ring voltage and -48 VDC "battery" required by the telephone interface units. The ring generator component supplies 20 Hz at 93 Vrms to the telephone interfaces via the card cage backplane. The specification requirement for 20 Hz ring voltage is 40 Vrms to 120 Vrms @ 0.1A. ETVS shall detect 20 Hz incoming voltage in accordance with EIA/TIA 464A-1, paragraph 4.1.2.2. The -48 VDC component also supplies its output to the telephone interfaces via the backplane. The Ring Generator must be installed in slot 16.

Each component has an alarm circuit associated with it. If ring voltage is lost or drops to approximately 40 Vrms, a threshold detector circuit trips the system alarm. Similarly if the

-48 VDC battery output is lost or drops to approximately -40 VDC, the threshold circuit trips the system alarm.

***Front Panel Controls and Indicators.*** There are no front panel controls. The FUSE ALM LED, that illuminates RED if the unit fuse blows, is the only front panel indicator. Refer to **Figure 5-16** for an illustration of the front panel.

***Input and Output Connections.*** All input and output connections are made at the front and rear panels. Refer to **Figure 5-17** for the unit input and output connections.

***Ring Generator Strapping.*** There is no strapping requirement.

Refer to **Figure 5-18** for the functional block diagram of the unit.

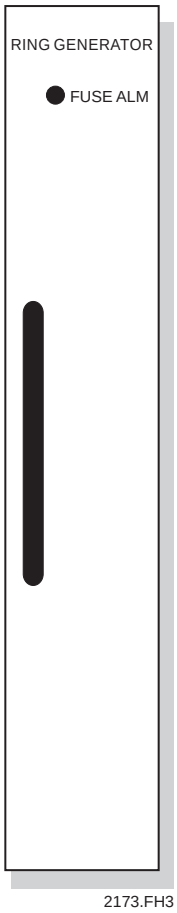


***Figure 5-16. Ring Generator Front Panel***

## 5.6 MAINTENANCE ACCESS UNIT

The Maintenance Access unit is a circuit card that provides front panel jack access to the signal paths of a position currently selected for maintenance monitoring purposes. The technician can patch the monitor audio from the (TX) MON jack of the Maintenance Access unit to the Maintenance Speaker Panel audio-in jack.

| TYPE | SIGNAL | | PIN NUMBERS | | | | SIGNAL | | TYPE |
|---|---|---|---|---|---|---|---|---|---|
| BUSSED | CARD CAGE ID | N/C | 1 | 33 | +24VA | 65 | FUSE ALARM | | BUSSED |
| “ | | N/C | 2 | 34 | +24VA | 66 | N/C | | “ |
| “ | | N/C | 3 | 35 | +24VA | 67 | N/C | | “ |
| OPEN | | N/C | 4 | 36 | +24VA | 68 | N/C | | OPEN |
| “ | | N/C | 5 | 37 | +24VB | 69 | N/C | | “ |
| “ | | N/C | 6 | 38 | +24VB | 70 | N/C | | “ |
| “ | | N/C | 7 | 39 | +24VB | 71 | N/C | | “ |
| “ | | N/C | 8 | 40 | +24VB | 72 | N/C | | “ |
| “ | +24VB | | 9 | 41 | +24VB | 73 | +24VB | | “ |
| BUSSED | | N/C | 10 | 42 | +24VB | 74 | N/C | | BUSSED |
| “ | | N/C | 11 | 43 | +24VB | 75 | N/C | | “ |
| “ | | | | | | | | | “ |
| “ | | N/C | 12 | 44 | -NC- | 76 | N/C | | “ |
| “ | | N/C | 13 | 45 | -NC- | 77 | N/C | | “ |
| “ | | N/C | 14 | 46 | PGND | 78 | N/C | | “ |
| “ | | N/C | 15 | 47 | “ | 79 | N/C | | “ |
| “ | | N/C | 16 | 48 | “ | 80 | N/C | | “ |
| “ | | N/C | 17 | 49 | “ | 81 | N/C | | “ |
| “ | | N/C | 18 | 50 | “ | 82 | N/C | | “ |
| “ | | N/C | 19 | 51 | “ | 83 | N/C | | “ |
| “ | | N/C | 20 | 52 | “ | 84 | N/C | | “ |
| “ | | N/C | 21 | 53 | PGND | 85 | N/C | | “ |
| “ | | N/C | 22 | 54 | PGND | 86 | N/C | | “ |
| “ | | N/C | 23 | 55 | “ | 87 | N/C | | “ |
| “ | | N/C | 24 | 56 | PGND | 88 | N/C | | “ |
| “ | | N/C | 25 | 57 | “ | 89 | N/C | | “ |
| OPEN | | N/C | 26 | 58 | -NC- | 90 | N/C | | OPEN |
| “ | | N/C | 27 | 59 | “ | 91 | N/C | | “ |
| BUSSED | RING VOLTAGE RV2 | | 28 | 60 | -NC- | 92 | RV1 | RING VOLTAGE | BUSSED |
| “ | RING VOLTAGE RV2 | | 29 | 61 | “ | 93 | RV1 | RING VOLTAGE | “ |
| OPEN | | N/C | 30 | 62 | -NC- | 94 | N/C | | OPEN |
| BUSSED | DCV- | | 31 | 63 | CGND | 95 | DCV+ | | BUSSED |
| “ | CHASSIS GROUND CGND | | 32 | 64 | “ | 96 | CGND | CHASSIS GROUND | “ |

***Figure 5-17. Ring Generator Input and Output Connections***

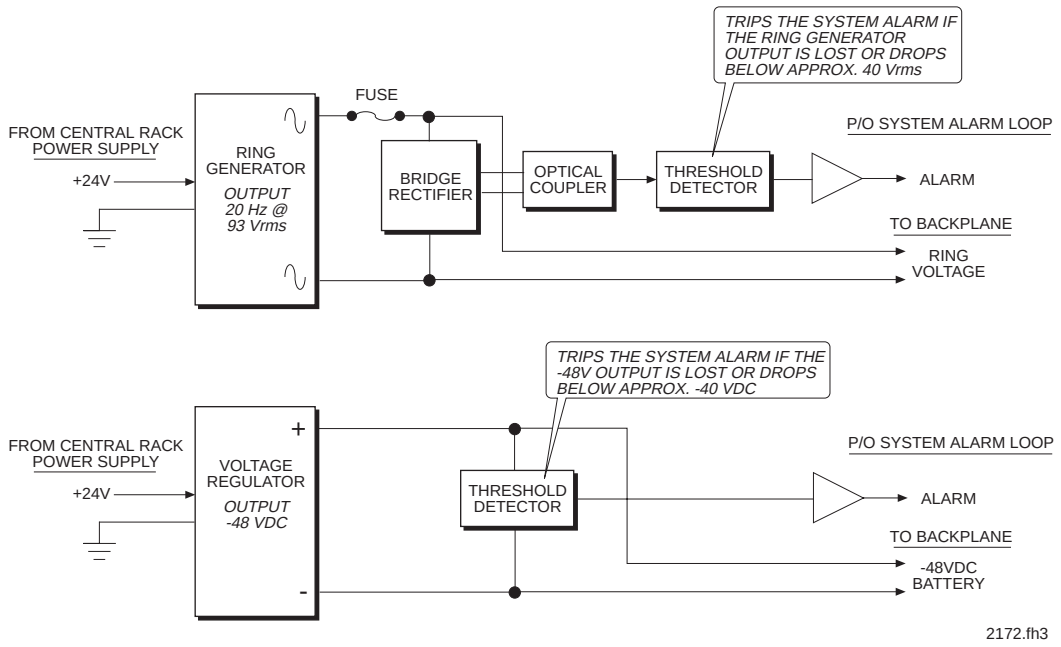


***Figure 5-18. Ring Generator Functional Block Diagram***

If the maintenance loopback function is configured at the SCT for a position, the maintenance position transmits a 1000-Hz tone to the position under test that is looped back by the selected codec at the test position. The loopback tone returns to the maintenance position headset or speaker and the Maintenance Access unit front panel jacks. If the technician configures the SCT for the position monitor function, the selected position's record audio is sent to the maintenance position headset or speaker and the Maintenance Access unit front panel jacks.

The unit does not sit directly on the voice data bus but receives voice data from an Operator Processor card reserved for the purpose. Interface with the Operator Processor is supplied by ST stream I/Os between the two cards.

The unit adapts the analog voice requirements at the front panel jacks to the digital ST I/O requirements of the Operator Processor. It translates the digital voice data signal from the Operator Processor to analog audio (TX) and performs the reverse operation for test signals injected at the front panel to the Operator Processor (RX). The CPS routes monitor and test signals to and from the interface using AC I/O 1.

***Unit Front Panel.*** Refer to **Table 5-16** for a list of front panel controls and indicators and **Figure 5-19** for an illustration of the front panel. **Table 5-17** lists the card strapping.

***Table 5-16. Maintenance Access Unit Front Panel Controls and Indicators***

| NOMENCLATURE | FUNCTION |
|---|---|
| FUSE ALARM | Lights red if fuse blows |
| VOX | Not used |
| LINE (TX) | F/P jack: TX Line |
| MON (TX) | F/P jack: TX Monitor |
| LINE (RX) | F/P jack: RX Line |
| MON (RX) | F/P jack: RX Monitor |
| XMT LVL | Potentiometer: Not used; card does not require alignment |
| TS | Not used |

The unit circuitry performs two basic functions: digital voice processing and analog voice processing. The digital circuits process the ST data messages to and from the Operator Processor. Digital-to-analog voice conversion takes place in the codec in this circuitry.

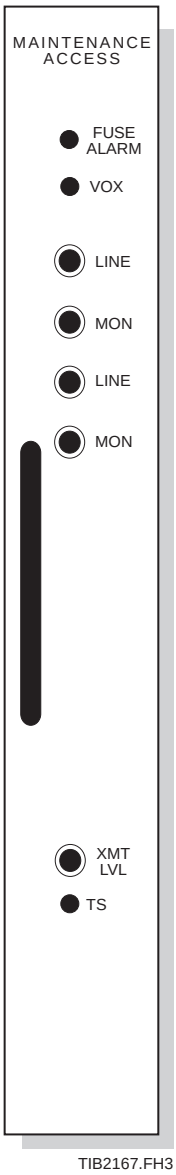


***Figure 5-19. Maintenance Access Unit Front Panels***

NOTE

The two top jacks, labeled “LINE” and “MON,” are for TX audio; the two lower jacks, also labeled “LINE” and “MON,” are for RX audio. See **Figure 5-21**.

***Table 5-17. Maintenance Access Unit Strapping***

| JUMPER | PURPOSE | STRAPPING |
|---|---|---|
| W2, W3 | K1 bypass | 1-2 |
| W4, W5 | K3 bypass | 1-2 |
| W17 | Channel selector<br>(dependent on S2)<br>Chs 16-31<br>Chs 0-15 | <br><br>1-2<br>2-3* |
| W18 | Line type (4W) | 1-2* |
| W20 | AGC disabled | 1-2* |
| W21 | Line type (4W) | 1-2*<br>5-6*<br>9-10* |
| S1** | Not installed | N/A |
| S2** | Time slot (dependent on W17) | 0 |
| S3** | Not installed | N/A |
| W1, 8, 10 | Not used | N/A |
| W6, 7, 9, 11–16, 19 | Not installed | N/A |

* ETVS default
** Switch setting

The analog circuitry processes the analog voice signals in the transmit and receive paths. It provides a balanced termination to the speaker line and test jacks in a transformer hybrid circuit.

***CEPT Data Stream Format.*** There are three input and three output ST data streams available at the Operator Processor, only one, AC I/O 1, is used to Communicate with the Maintenance Access card.

The single ST data stream to the Maintenance Access interface from the Operator Processor is labeled ACI 1 (I= input to the interface). It contains data as follows:

ACI 1 Monitor voice data/Loopback tone

The single ST data stream to the Operator Processor is labeled ACO 1 (O=output from the interface). It contains data as follows:

ACO 1 Test tone

Refer to **Figure 5-20** for the interface input and output connections. **Figure 5-21** illustrates the functional block diagram.

| TYPE | SIGNAL | | PIN NUMBERS | | | | | SIGNAL | TYPE |
|---|---|---|---|---|---|---|---|---|---|
| | | +24 VA | 1 | 66 | +24 VA | 131 | +24 VA | | |
| | | +24 VB | 2 | 67 | +24 VB | 132 | +24 VB | | |
| | | N/C | 3 | 68 | N/C | 133 | N/C | | |
| | | FSALRM | 4 | 69 | FSALRM | 134 | FSALRM | | |
| OPEN | | N/C | 5 | 70 | E-2 GND | 135 | N/C | | OPEN |
| “ | | N/C | 6 | 71 | | 136 | N/C | | “ |
| “ | | N/C | 7 | 72 | | 137 | N/C | | “ |
| “ | | N/C | 8 | 73 | | 138 | N/C | | “ |
| “ | | N/C | 9 | 74 | | 139 | N/C | | “ |
| “ | | N/C | 10 | 75 | | 140 | N/C | | “ |
| “ | | N/C | 11 | 76 | | 141 | N/C | | “ |
| “ | | N/C | 12 | 77 | | 142 | N/C | | “ |
| “ | | N/C | 13 | 78 | | 143 | N/C | | “ |
| “ | | N/C | 14 | 79 | | 144 | N/C | | “ |
| “ | | N/C | 15 | 80 | | 145 | N/C | | “ |
| “ | | N/C | 16 | 81 | | 146 | N/C | | ‘ |
| “ | | N/C | 17 | 82 | | 147 | N/C | | “ |
| “ | | N/C | 18 | 83 | | 148 | N/C | | “ |
| “ | | N/C | 19 | 84 | | 149 | N/C | | “ |
| “ | | N/C | 20 | 85 | | 150 | N/C | | “ |
| “ | | N/C | 21 | 86 | | 151 | N/C | | “ |
| “ | DIGITAL RX VOICE, ACO1 | OUT | 22 | 87 | | 152 | IN | ACI1, DIGITAL TX VOICE | “ |
| “ | | N/C | 23 | 88 | | 153 | N/C | | “ |
| “ | | N/C | 24 | 89 | E-2 GND | 154 | N/C | | “ |
| “ | | N/C | 25 | 90 | N/C | 155 | N/C | | “ |
| OPEN | | N/C | 26 | 91 | N/C | 156 | N/C | | OPEN |
| BUSSED | | N/C | 27 | 92 | E-1 GND | 157 | N/C | | BUSSED |
| | | N/C | 28 | 93 | | 158 | N/C | | |
| “ | | N/C | 29 | 94 | | 159 | N/C | | “ |
| | | N/C | 30 | 95 | | 160 | N/C | | |
| | | N/C | 31 | 96 | | 161 | N/C | | |
| “ | | N/C | 32 | 97 | | 162 | N/C | | “ |
| | | N/C | 33 | 98 | | 163 | N/C | | |
| | | N/C | 34 | 99 | | 164 | N/C | | |
| | | N/C | 35 | 100 | | 165 | N/C | | |
| | | N/C | 36 | 101 | | 166 | N/C | | |
| | CARD SLOT ID, CS0 | IN | 37 | 102 | | 167 | IN | CS1, CARD SLOT ID | |
| | CS2 | IN | 38 | 103 | | 168 | IN | CS3 | |
| | CARD CAGE ID, CC0 | IN | 39 | 104 | | 169 | IN | CC4, CARD CAGE ID | |
| BUSSED | CC3 | IN | 40 | 105 | | 170 | IN | CC2 | |
| (S1, | CC1 | IN | 41 | 106 | E-1 GND | 171 | IN | CS4 | |
| W100) | | | | | | | | | |
| BUSSED | CC5 | IN | 42 | 107 | E-3 GND | 172 | IN | CC6, CARD CAGE ID | |
| | CARD CAGE ID, CC7 | IN | 43 | 108 | | 173 | N/C | | |
| | | N/C | 44 | 109 | | 174 | N/C | | |
| | | N/C | 45 | 110 | | 175 | N/C | | |
| | | N/C | 46 | 111 | | 176 | N/C | | |
| | | N/C | 47 | 112 | | 177 | N/C | | |
| | | N/C | 48 | 113 | | 178 | N/C | | |
| | | N/C | 49 | 114 | | 179 | N/C | | |
| | | N/C | 50 | 115 | | 180 | N/C | | |
| | | N/C | 51 | 116 | | 181 | N/C | | |
| | | N/C | 52 | 117 | | 182 | N/C | | |
| | | N/C | 53 | 118 | | 183 | N/C | | |
| | | N/C | 54 | 119 | | 184 | N/C | | |
| | | N/C | 55 | 120 | | 185 | N/C | | |
| | | N/C | 56 | 121 | | 186 | N/C | | |
| | | N/C | 57 | 122 | | 187 | N/C | | |
| | | N/C | 58 | 123 | | 188 | N/C | | |
| | 4.096-MHz CLOCK, 4M+ | IN | 59 | 124 | | 189 | IN | 4M-, 4.096 MHz CLOCK | |
| | | N/C | 60 | 125 | | 190 | N/C | | |
| | | N/C | 61 | 126 | | 191 | N/C | | |
| | SYSTEM FRAME PULSE, FRS+ | IN | 62 | 127 | | 192 | IN | FRS-, SYSTEM FRAME PULSE | |
| | | N/C | 63 | 128 | | 193 | N/C | | |
| | | N/C | 64 | 129 | | 194 | N/C | | |
| BUSSED | | N/C | 65 | 130 | E-3 GND | 195 | N/C | | BUSSED |

N/C = NO CONNECTION (NOT USED)

***Figure 5-20. Maintenance Access 2/4-Wire Input and Output Connections***

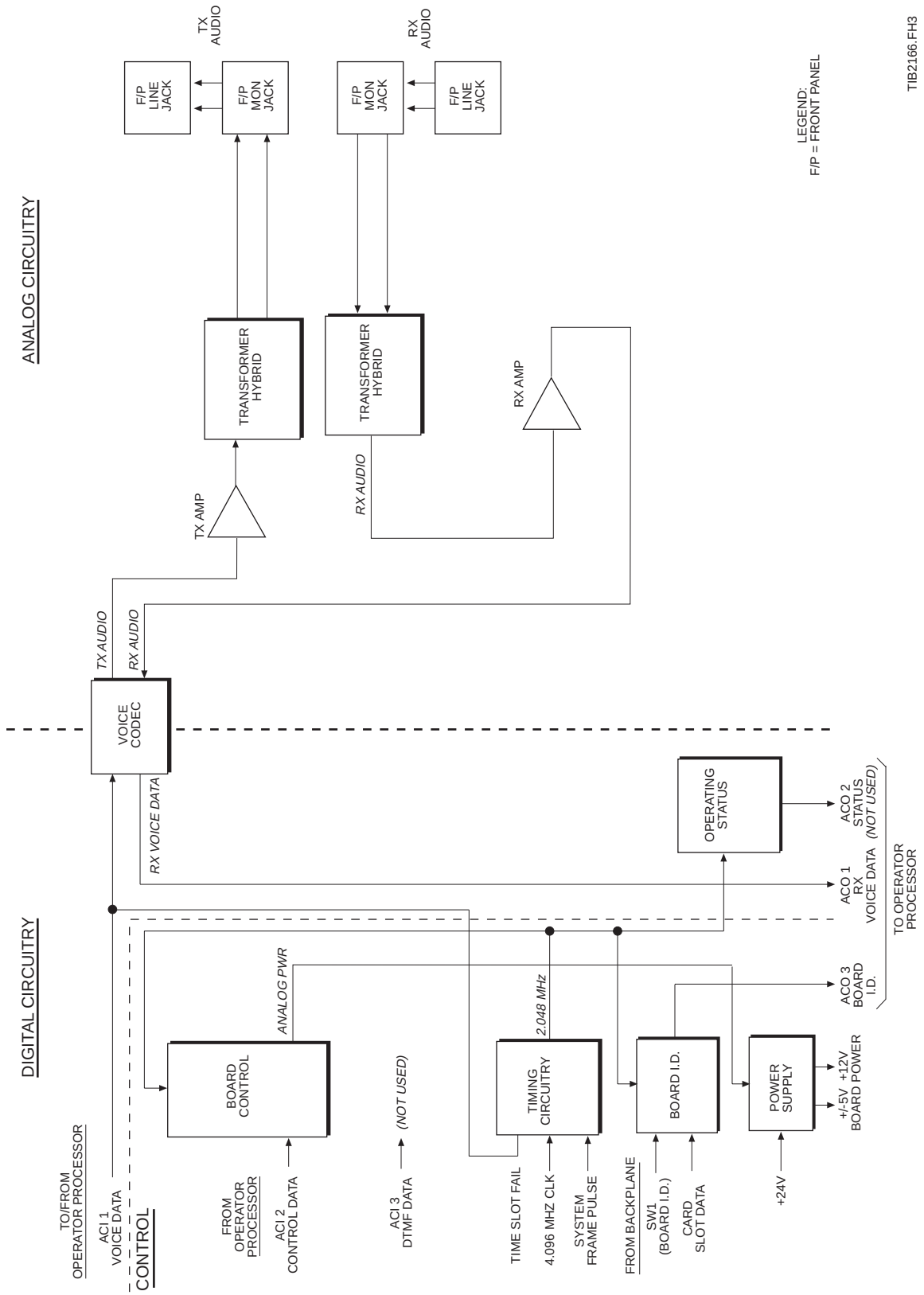


***Figure 5-21. Maintenance Access Unit Functional Block Diagram***

## 5.7 RADIO PROCESSOR

The Radio Processor interfaces the bi-polar analog audio signal lines of two radio transmitters and two receivers with the digital signal processing requirements of the System. Each processor serves both the transmit and receive I/O requirements of one system radio channel. Board operation is managed by an 80C188 microprocessor operating at 12 MHz.

Main and standby (M/S) transmitters and receivers are connected to the board via the Radio Distribution Panel. The board provides main and standby selection of the audio lines, PTT lines, and squelch break lines. The operator controls the main/standby transmitter and receiver selection from the position. Each position has an M/S transmitter and M/S receiver selector key, enabling transmitter and receiver switching to be made independently.

In some systems, redundancy may be required for the radio channel within the system. The Radio Processor is designed to support installation in the card cage of Radio Processor pairs to provide processor main/standby redundancy. In such an installation, an RS-232 serial data bus links the two boards, enabling each board to monitor the other's operating status. If one of the boards fails, communications are automatically completed by the other board. Main/standby Radio Processor switching is transparent to the operator.

By installing Radio Processor pairs, complete redundancy to the communications channels, both at the radio equipment end and at the system channel level, is possible.

Squelch break and VOX-detect circuits alert the operator positions to incoming receive voice signals. Each circuit is available. The circuit used depends on the interface lines available from the customer radio equipment.

***Front Panel Controls and Indicators.*** The front panel is illustrated in **Figure 5-22**. **Table 5-18** defines the control and indicator functions.

Use the DIGN switch to match the Radio Processor to the radio equipment installation for the channel the card serves as specified in **Table 5-18**. For example, if there is no standby radio equipment for the channel and the channel is to be used as a receive-only channel, set DIGN to position 3. In this mode, pressing the standby and transmit select keys at the position will have no effect.

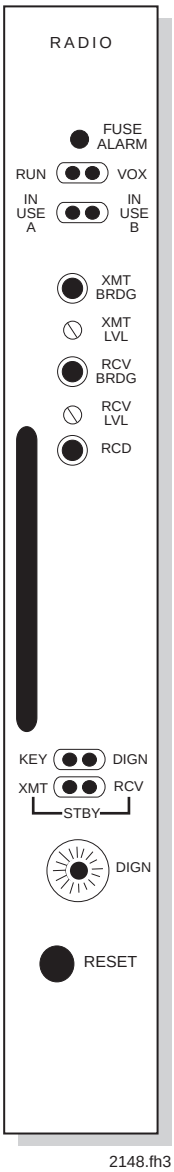


*Figure 5-22. Radio Processor Front Panel*

***Table 5-18. Radio Processor Front Panel Controls and Indicators***

| NOMENCLATURE | FUNCTION |
|---|---|
| FUSE ALARM | Lights red if fuse blows |
| RUN | Lights green when CPU normal |
| VOX | Lights green for receive voice at -28dBm0; VOX indicator goes off at -34dBm0 |
| IN USE A | A-bus active: steady on, bus error |
| IN USE B | B-bus active: steady on, bus error |
| XMT BRDG | F/P jack: for monitoring transmit activity |
| XMT LVL | Potentiometer: adjusts transmit amp gain |
| RCV BRDG | F/P jack: for monitoring receive activity |
| RCV LVL | Potentiometer: adjusts receive amp gain |
| RCD | F/P jack: for monitoring record activity |
| STBY XMT/RCV | Light yellow to indicate current standby radio (transmitter and/or receiver) selection |
| KEY | Lights green during transmitter key |
| DIGN (LED) | Lights steady yellow after boot-up if board is the standby processor. Flashing yellow indicates failed card. |
| DIGN (Switch) | Set to 0 for normal use |
| | DIGN set to: 1 for receive only (radio equipment)<br>2 for main only (radio equipment)<br>3 for main, receive only (radio equipment) |
| | Set to F for the alignment mode |
| RESET | Pushbutton; press to force reboot |

***Input and Output Connections.*** All input and output connections are made at the card edge connector P1. The card cage backplane serves as the interface to this card. **Figure 5-23** illustrates the I/O connections at the card edge connector and identifies the function of the signal connected at each pin**.**

***Radio Processor Strapping.*** Before installing the card in the card cage slot, ensure that the correct strapping is installed as defined in **Table 5-19**.

The board circuitry performs seven basic functions: 1) digital voice bus time-slot selection, 2) A/D/A voice conversion, 3) analog voice processing, 4) VOX or squelch break detect, 5) transmitter keying, 6) main/standby radio selection, and 7) processor redundancy diagnostics and switch over as shown in **Figure 5-24**.

| TYPE | SIGNAL | | PIN NUMBERS | | | | | SIGNAL | TYPE |
|---|---|---|---|---|---|---|---|---|---|
| | +24 VA | | 1 | 66 | +24 VA | 131 | +24 VA | | |
| | +24 VB | | 2 | 67 | +24 VB | 132 | +24 VB | | |
| | EMI GND | | 3 | 68 | EMI GND | 133 | EMI GND | | |
| | FSALRM | | 4 | 69 | FSALRM | 134 | FSALRM | | |
| OPEN | TX AUDIO (main), TX2 (M) | OUT | 5 | 70 | E-2 GND | 135 | OUT | TX1 (M), TX AUDIO (main) | OPEN |
| " | RX AUDIO (main), RX2 (M) | IN | 6 | 71 | | 136 | IN | RX1 (M), RX AUDIO (main) | " |
| " | PTT (main), PTT2 (M) | OUT | 7 | 72 | | 137 | OUT | PTT1 (M), PTT (main) | " |
| " | RECORD AUDIO, RCDR2 | OUT | 8 | 73 | | 138 | OUT | RCDR1, RECORD AUDIO | " |
| " | M/S TX SWITCH, TXSW2 | OUT | 9 | 74 | | 139 | OUT | TXSW1, M/S TX SWITCH | " |
| " | M/S RX SWITCH, RXSW2 | OUT | 10 | 75 | | 140 | OUT | RXSW1, M/S RX SWITCH | " |
| " | TX AUDIO (stndby), TX2 (S) | OUT | 11 | 76 | | 141 | OUT | TX1 (S), TX AUDIO (stndby) | " |
| " | RX AUDIO (stndby), RX2 (S) | IN | 12 | 77 | | 142 | IN | RX1 (S), RX AUDIO (stndby) | " |
| " | PTT (stndby), PTT2 (S) | OUT | 13 | 78 | | 143 | OUT | PTT1 (S), PTT (stndby) | " |
| " | SQUELCH (stndby), SQBR+(S) | IN | 14 | 79 | | 144 | IN | SQBR+(M), SQUELCH (stndby) | " |
| " | SQUELCH (stndby), SQBR-(S) | IN | 15 | 80 | | 145 | IN | SQBR-(M), SQUELCH (stndby) | " |
| " | RX CENTER TAP, RXCT | IN | 16 | 81 | | 146 | IN | TXCT, TX CENTER TAP | " |
| " | +AUX | N/C | 17 | 82 | | 147 | N/C | -AUX | " |
| " | XSTAT | IN | 18 | 83 | | 148 | N/C | | " |
| " | | N/C | 19 | 84 | | 149 | N/C | | " |
| " | | N/C | 20 | 85 | | 150 | N/C | | " |
| " | | N/C | 21 | 86 | | 151 | N/C | | " |
| " | | N/C | 22 | 87 | | 152 | N/C | | " |
| " | | N/C | 23 | 88 | | 153 | N/C | | " |
| " | | N/C | 24 | 89 | E-2 GND | 154 | N/C | | " |
| " | | N/C | 25 | 90 | N/C | 155 | N/C | | " |
| OPEN | M/S PROCESSOR CNTRL, TXD | IN | 26 | 91 | N/C | 156 | N/C | | OPEN |
| BUSSED | CONTROL BUS A, AD0 | I/O | 27 | 92 | E-1 GND | 157 | I/O | BD0 CONTROL BUS B | BUSSED |
| | AD1 | I/O | 28 | 93 | | 158 | I/O | BD1 | |
| " | AD2 | I/O | 29 | 94 | | 159 | I/O | BD2 | " |
| | AD3 | I/O | 30 | 95 | | 160 | I/O | BD3 | |
| | AD4 | I/O | 31 | 96 | | 161 | I/O | BD4 | |
| " | AD5 | I/O | 32 | 97 | | 162 | I/O | BD5 | " |
| | AD6 | I/O | 33 | 98 | | 163 | I/O | BD6 | |
| | AD7 | I/O | 34 | 99 | | 164 | I/O | BD7 | |
| | AST | I/O | 35 | 100 | | 165 | I/O | BST | |
| | CONTROL BUS A, AIN | I/O | 36 | 101 | | 166 | I/O | BIN, CONTROL BUS B | |
| | CARD SLOT ID, CS0 | IN | 37 | 102 | | 167 | IN | CS1, CARD SLOT ID | |
| | CS2 | IN | 38 | 103 | | 168 | IN | CS3 | |
| | CARD CAGE ID, CC0 | IN | 39 | 104 | | 169 | IN | CC4, CARD CAGE ID | |
| BUSSED | CC3 | IN | 40 | 105 | | 170 | IN | CC2 | |
| (S1, W100) | CC1 | IN | 41 | 106 | E-1 GND | 171 | IN | CS4, CARD SLOT ID | |
| BUSSED | CC5 | IN | 42 | 107 | E-3 GND | 172 | IN | CC6, CARD CAGE ID | |
| | CARD CAGE ID, CC7 | IN | 43 | 108 | | 173 | N/C | | |
| | | N/C | 44 | 109 | | 174 | N/C | | |
| | | N/C | 45 | 110 | | 175 | N/C | | |
| | | N/C | 46 | 111 | | 176 | N/C | | |
| | | N/C | 47 | 112 | | 177 | N/C | | |
| | | N/C | 48 | 113 | | 178 | N/C | | |
| | | N/C | 49 | 114 | | 179 | N/C | | |
| | VOICE DATA BUS DD0+ | I/O | 50 | 115 | | 180 | I/O | DD0-, VOICE DATA BUS | |
| | DD1+ | I/O | 51 | 116 | | 181 | I/O | DD1- | |
| | DD2+ | I/O | 52 | 117 | | 182 | I/O | DD2- | |
| | DD3+ | I/O | 53 | 118 | | 183 | I/O | DD3- | |
| | DD4+ | I/O | 54 | 119 | | 184 | I/O | DD4- | |
| | DD5+ | I/O | 55 | 120 | | 185 | I/O | DD5- | |
| | DD6+ | I/O | 56 | 121 | | 186 | I/O | DD6- | |
| | VOICE DATA BUS, DD7+ | I/O | 57 | 122 | | 187 | I/O | DD7-, VOICE DATA BUS | |
| | UP-LINK B, PCMHB | OUT | 58 | 123 | | 188 | N/C | | |
| | 4.096 MHz CLOCK, 4M+ | IN | 59 | 124 | | 189 | IN | 4M-, 4.096 MHz CLOCK | |
| | SYSTEM FRAME PULSE, FRS+ | IN | 60 | 125 | | 190 | IN | FRS-, SYSTEM FRAME PULSE | |
| | | N/C | 61 | 126 | | 191 | N/C | | |
| | | N/C | 62 | 127 | | 192 | N/C | | |
| | 2.048 MHz CLOCK, 2M+ | IN | 63 | 128 | | 193 | IN | 2M-, 2.048 MHz CLOCK | |
| | UP-LINK A, PCMHA | OUT | 64 | 129 | | 194 | N/C | | |
| BUSSED | | N/C | 65 | 130 | E-3 GND | 195 | N/C | | BUSSED |

N/C = NO CONNECTION (NOT USED)

***Figure 5-23. Radio Processor Input and Output Connections***

### *Table 5-19. Radio Processor Unit Strapping*

| JUMPER | PURPOSE | STRAPPING |
|---|---|---|
| W2 | PTT confirm: | |
| | TX key (+V) | 1-2 |
| | TX key (GND) | 2-3 |
| | Local key confirm | 3-4* |
| W3 | PTT signaling: | |
| | Closure | 3-4 |
| | Voltage Key: | |
| | Positive on PTT1 | 2-4, 3-5 |
| | Return on PTT1 | 1-3, 4-6 |
| | Simplex Key: | |
| | Positive on center-tap | 1-3 |
| | Return on center-tap | 3-5 |
| W4 | TX center-tap keying: | |
| | Simplex | 1-2 |
| | Normal | OFF* |
| W5 | PTT switch contacts: | |
| | Normally closed | 1-2 |
| | Normally open | 2-3* |
| W6 | RX center-tap: | |
| | Squelch break | 1-2 |
| | Normal | OFF* |
| W7 | RX center-tap: | |
| | Confirm/squelch break | 1-2 |
| | Normal | OFF* |
| W8 | XMT Switch Contacts: | |
| | Normally closed | 1-2 |
| | Normally open | 2-3* |
| W9 | RCV Switch Contacts: | |
| | Normally closed | 1-2 |
| | Normally open | 2-3* |
| W11 | Watchdog enabled | 1-2* |
| W15 | TX Compression (AGC) | |
| | Disabled | 1-2* |
| | Enabled | 2-3 |
| S1** | Dual Processor (Main/Standby) | 0 |
| | Dual Processor—RX only | 1 |
| | Single Processor (Main only) | 2 |
| | Single Processor—RX only | 3 |
| | Align mode | F |
| W1, 10, 12-14, 16 | Not used | N/A |

* ETVS default setting
** Switch setting

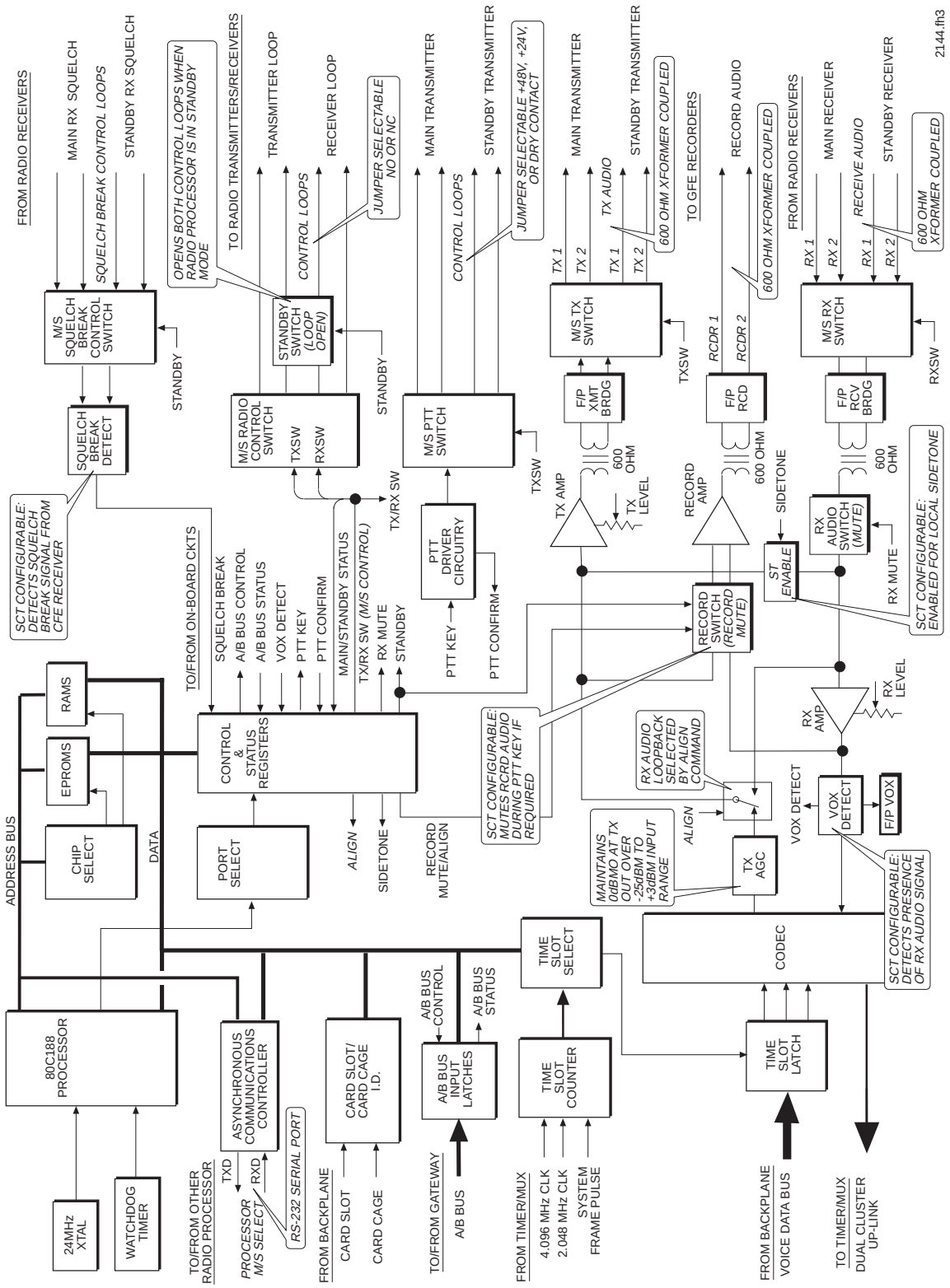


***Figure 5-24. Radio Processor Functional Block Diagram***

Only one down-link voice-bus channel at a time can be accessed by the Radio Processor, with no voice data summing taking place. Selection of the voice-bus channel is achieved by a time-slot counting circuit. The circuit counts off bus time slots until the slot occupied by the desired channel is reached. Data in this time slot is then written to the codec. In the transmit path, it is converted to an analog signal by the codec, processed by the analog circuitry, and output to the active radio transmitter. A portion of the signal is routed to a recorder output for voice archiving by the legal recording equipment.

On the receive path, analog voice is received from the radio receiver, amplified and fed to the codec. A portion of the receive signal is output, through a record amplifier, to the customer-furnished recorder (if installed). A VOX-detect circuit in the receive path establishes a VOX indication at the operator positions. (If the customer interface is available, this function is performed by the squelch break-detect circuit.) The codec converts the analog voice signal to digital voice data and, using timing signals derived from the System clocks and System frame pulse, outputs the digital data in the appropriate time slot on the dual up-link to the System TMUs.

**Figure 5-25** illustrates the redundancy scheme with Radio Processor pairs installed in the card cage and redundant radio transmitters and receivers connected to the System.

***PTT.*** The board provides two PTT control loops to the customer transmitters: one to the main transmitter and one to the standby transmitter. Jumpers enable the user to select PTT activation on a NO or NC loop. An on-board relay switches in the appropriate loop, depending on the main/standby transmitter selection. A PTT-detection circuit confirms that the PTT signal has been sent to the customer transmitter. The Radio Processor returns a confirmation message to the position that causes a PTT key indicator at the TX SEL key to illuminate in response to the operator's key action. ETVS supports GFE transmitters that use simplex, battery loop, or short-to-ground loop lines for PTT.

***TX Compression (AGC)***. When the jumper at W15 connects pins 2 and 3, it places the TX compression circuit in the TX signal path before the final TX amplifier. The circuit ensures a constant output level from the final TX amplifier of 0dBm0 across an input range to the TX compression circuit of -25dBm0 to +3dBm0.

***Main/Standby Radio Selection.*** Five relays control position operator selection of main and standby (M/S) transmitters (TX) and receivers (RX) as follows:

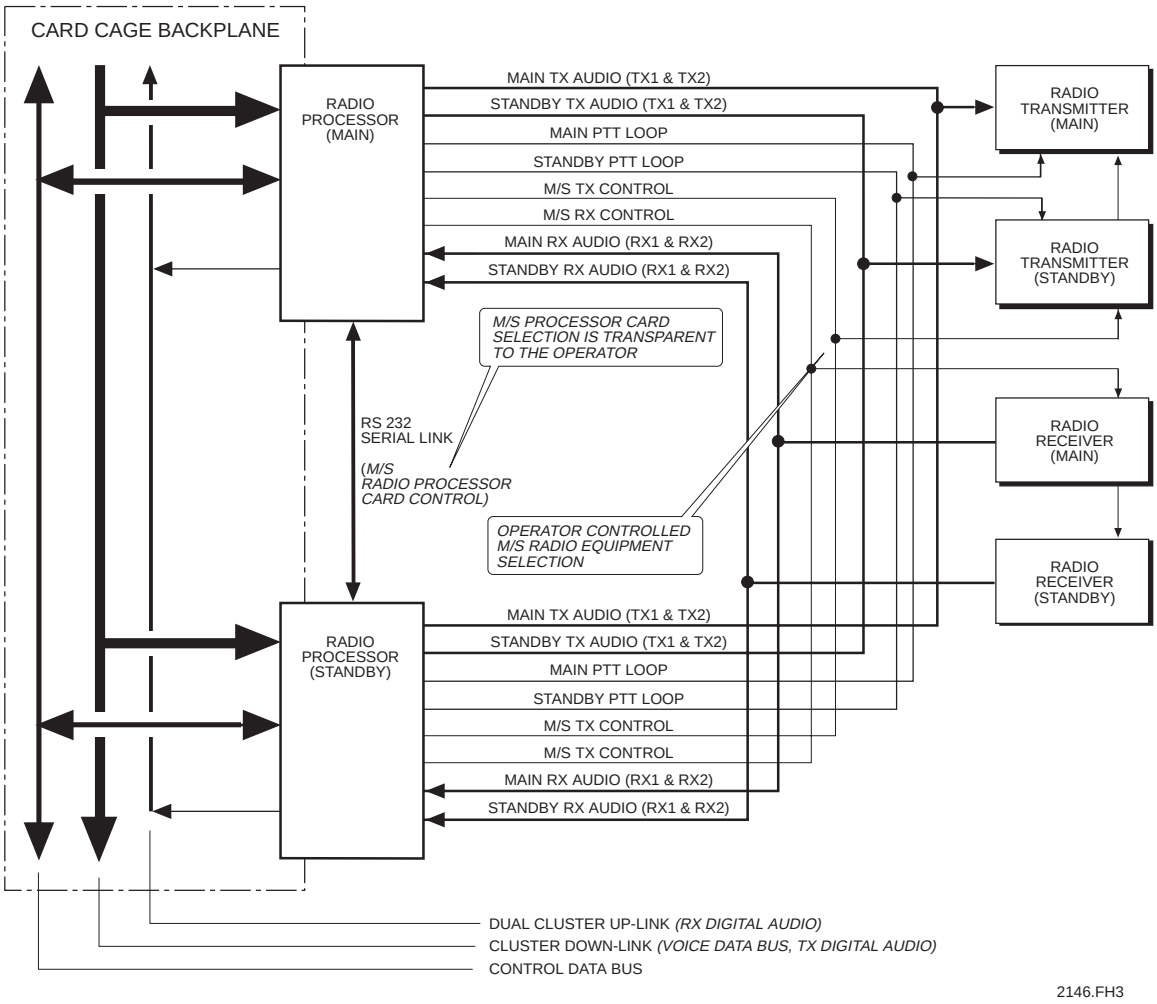


***Figure 5-25. Radio Processor and Radio Equipment Redundancy***

- M/S Radio Control Switch—controls the state of independent control loops to the customer's redundant transmitter and receiver equipment. Using board-mounted jumpers, you can set the loops to activate in the NO or NC conditions. An amber LED on the front panel indicates the current selection. The current selection is also indicated at the operator positions.
- M/S TX Switch—switches the transmit audio output to the selected transmitter.
- M/S RX Switch—switches the receive audio input from the currently selected receiver to the board for processing.
- M/S PTT Switch—connects the PTT control loop of the currently selected transmitter to the board PTT driver circuitry.
- M/S Squelch Break Control Switch—connects the squelch break input lines from the currently selected receiver to the squelch break detect circuitry.

***Squelch Break and VOX Detection.*** The board can be configured at the SCT to provide squelch break or VOX indication of the receive audio at the positions. Either source can be used, depending on the interface available from the customer equipment. If the customer's equipment can supply a squelch break signal by closing a signal ground loop to the board's squelch-detect circuitry (signal ground is provided by the Radio Processor), squelch break can be configured. If not, configure the board for VOX detection. The receive line is always open to the VOX-detect circuit. When incoming audio is present, the VOX circuit detects the audio and turns on indication at -28 dBmO (< 20 ms attack) and off at -34 dBmO (2 sec. release) and below. There is no squelch-break indicator on the F/P, only a VOX indicator.

***Radio Processor Redundancy.*** To secure redundancy to the radio channel within the System, two Radio Processor boards can be installed for each radio channel. In this arrangement, an RS-232-bus connects the two cards and carries operating status between the two. If the currently active board fails, the companion board is activated and the failed board is deactivated. The front panel DIGN indicator identifies the active board.

When the board is inactive (in standby), an on-board control signal, standby, disables the M/S radio control switching loops, enables record audio mute, and disables the squelch-break input.

***Local and Remote Radio Sidetone.*** The user can configure the radio channel to operate with local or remote radio sidetone at the SCT. **Figure 5-26** illustrates the two methods of obtaining radio sidetone.

In local sidetone mode, the operator's voice is returned to the operator's headset from the input to the transmit amplifier on the Radio Processor board. In this mode, the on-board ST Enable circuit is enabled by the sidetone signal.

In remote sidetone mode, the operator's voice is returned via the customer's radio receiver. In this mode, the on-board ST Enable circuit is disabled. When an operator keys a radio channel configured for either mode, the operator's position sidetone is disabled.

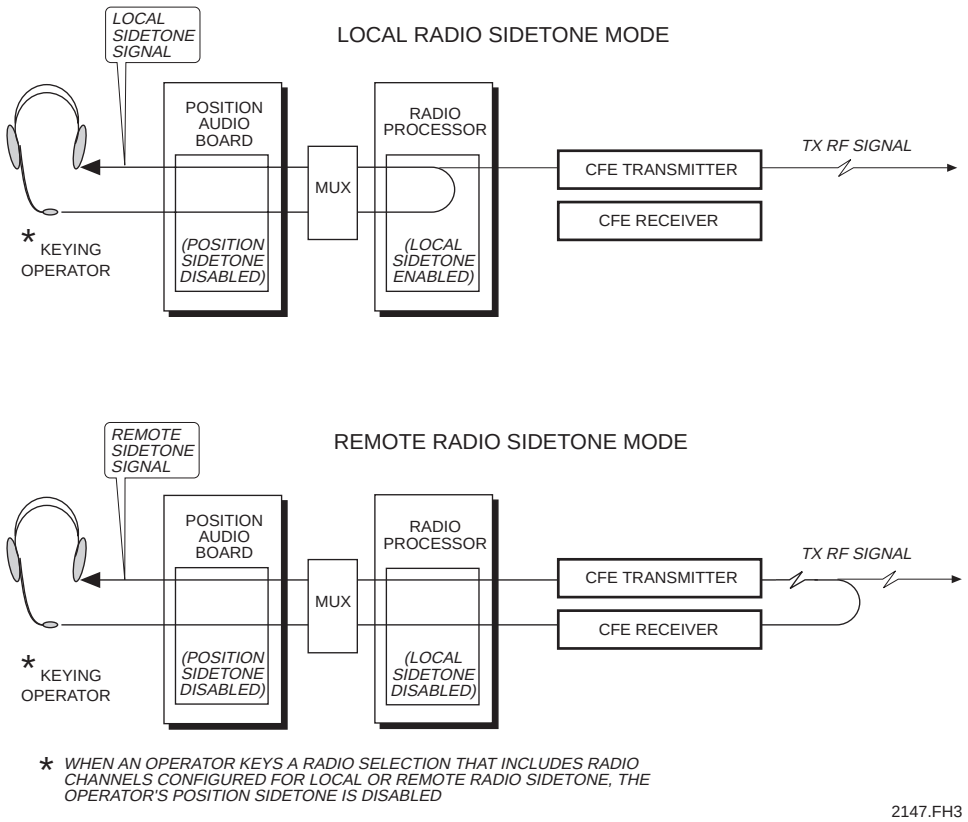


***Figure 5-26. Air-to-ground Local and Remote Radio Sidetone Methods***

***Record Audio.*** Portions of the transmit and receive analog audio signals provide output to a customer-furnished legal recorder via the Radio Distribution Panel and demarc. If the radio channel is configured for remote sidetone, the output to the recorder is muted by the record mute switch during PTT keying to prevent interference with the transmit signal also being recorded.

***Receive Mute.*** Normally the RX signal is muted during PTT keying; however, if the radio channel is configured for receive only, or remote sidetone use, the RX signal is not muted.

***Align Mode.*** Position F on the diagnostic switch, S1, places the interface in the align mode. In this mode, the interface is off-line and set up for test and alignment purposes. Align mode opens the TX line from the codec and connects the TX amplifier input to the RX input line after the coupling transformer. It also opens the TX line to the record amplifier. In this mode, the technician may insert test signals at RX BRDG to adjust the gain of the TX amplifier using the front panel XMT LVL potentiometer and measuring the level at TX BRDG.

## 5.8 REMOTE RADIO PROCESSOR

The Remote Radio Processor interfaces the analog audio signal lines of a 4/6/8-wire trunk with the digital signal requirements of the system. The trunk connects two Remote Radio Processors, located in separate remotely located systems. One of the systems has direct radio interface with local radio equipment and provides the second system access to the same radio equipment via the trunk. Such an arrangement is used in remote frequency interlock schemes in which the operator at a communications switch, without direct radio interface, has access to radio frequencies through another switch with direct radio interface. The following terms define the two systems:

- Interlocking system—the system providing access to the radio equipment.
- Interlocked system—the system using the interlocking system for access to the radio equipment.

Radio channels in the interlocking system require Radio Processors to interface the radio equipment. Radio channels in the remote system, without direct radio interface, require Remote Radio Processors for access to the trunks connecting the two systems.

**Figure 5-27** illustrates a typical remote frequency interlock scheme that uses standard DENRO boards in both communications switches. In the scheme, the Remote Radio Processor combines the functional elements of a Radio Processor and an E&M Interface.

***Front Panel Controls and Indicators.*** The front panel is illustrated in **Figure 5-28**. **Table 5-20** defines the control and indicator functions.

***Input and Output Connections.*** All input and output connections are made at the card edge connector P1. The card cage backplane serves as the interface to this card. **Figure 5-29** illustrates the I/O connections at the card edge connector and identifies the function of the signal connected at each pin**.**

***Remote Radio Processor Strapping.*** Before installing the card in the card cage slot, ensure that the correct strapping is installed as defined in **Table 5-21**.

The board circuitry performs six basic functions: 1) digital voice bus time-slot selection, 2) A/D/A voice conversion, 3) analog voice processing, 4) SF transmission and detection, 5) transmitter keying, and 6) lockout as shown in **Figure 5-30**.

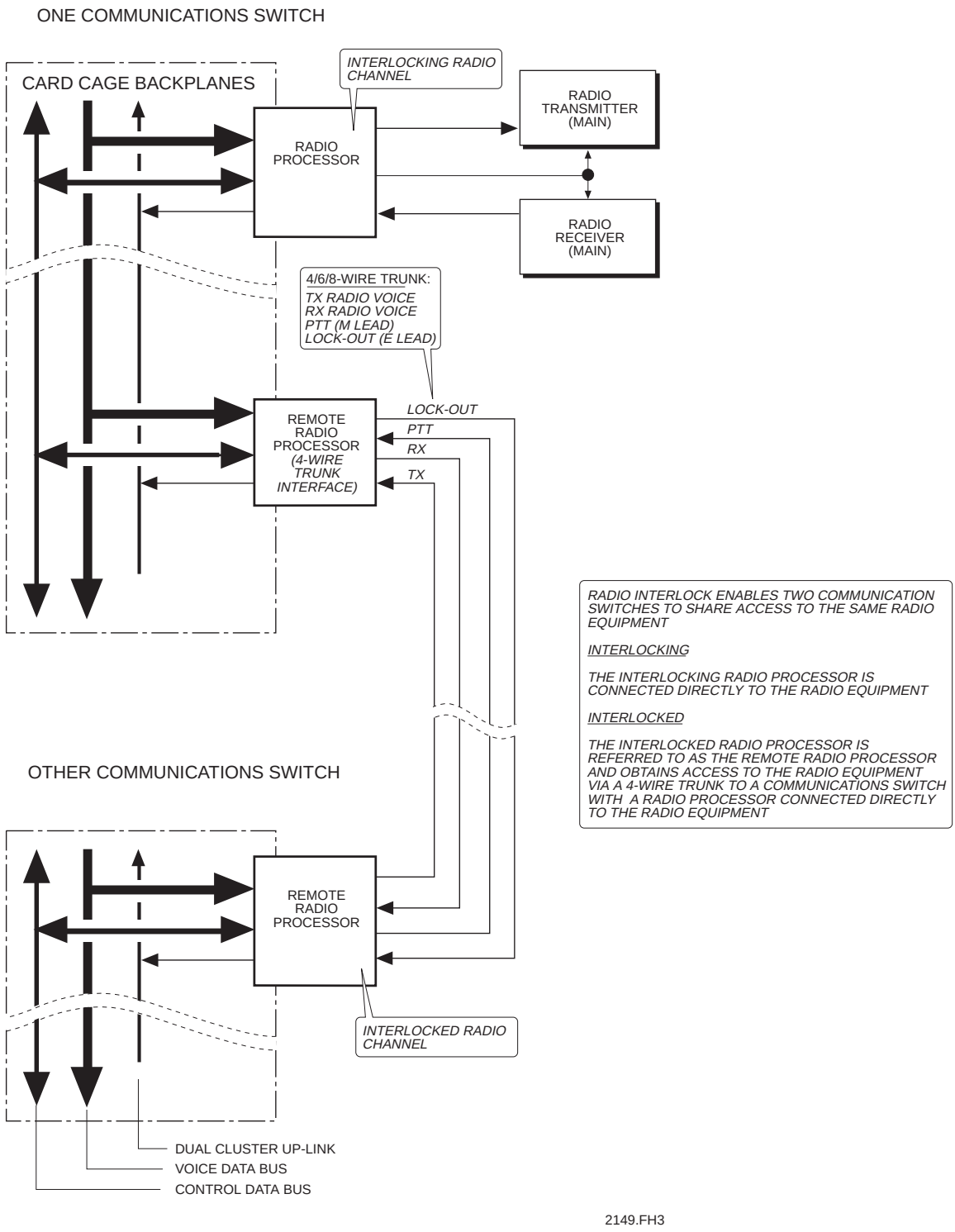


***Figure 5-27. Typical Remote Frequency Interlock Scheme***

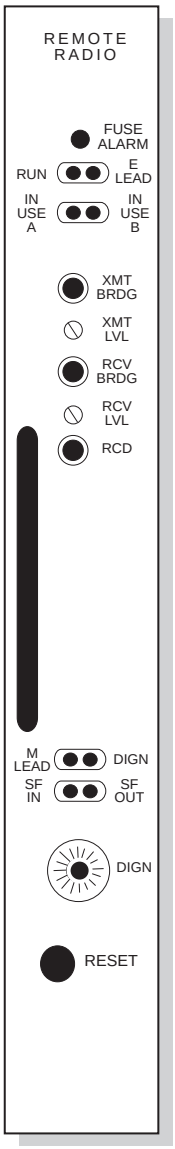


*Figure 5-28. Remote Radio Processor Front Panel*

***Table 5-20. Remote Radio Processor Front Panel Controls and Indicators***

| NOMENCLATURE | FUNCTION |
|---|---|
| FUSE ALARM | Lights red if fuse blows |
| RUN | Lights green when CPU normal |
| E-LEAD | Lights green when remote frequency is in use (E&M mode only) |
| IN USE A | A-bus active: steady on, bus error |
| IN USE B | B-bus active: steady on, bus error |
| XMT BRDG | F/P jack: for monitoring transmit activity |
| XMT LVL | Potentiometer: adjusts transmit amp gain |
| RCV BRDG | F/P jack: for monitoring receive activity |
| RCV LVL | Potentiometer: adjusts receive amp gain |
| RCD | F/P jack: for monitoring record activity |
| SF IN | Lights green when remote radio frequency is in use (SF mode only) |
| SF OUT | Lights green during transmitter key (SF mode only) |
| M-LEAD | Lights green during transmitter key (E&M mode only) |
| DIGN (LED) | Lights yellow during boot-up and diagnostics routines, stays lighted if boot fails or if board is in standby mode |
| DIGN (Switch) | Set to 0 for normal use |
| | Set to 1 to configure RMT radio as SF tone key (enables tone-on-idle) |
| | Set to “F” for align mode |
| RESET | Push-button; press to force re-boot |
| (VOX on board) | Lights green for receive voice at -25dBm0; VOX indicator goes off at -31dBm0. |

The Remote Radio Processor accesses only one voice channel at a time, with no voice data summing taking place. A time-slot counting circuit performs voice bus channel selection. The circuit counts off bus time slots until it reaches the slot occupied by the desired channel. Data in this time slot is then written to the codec. In the transmit path, it is converted to an analog signal by the codec, processed by the analog circuitry, and output to the trunk. A portion of the signal is routed to a recorder output for voice archiving by customer-furnished recording equipment.

On the receive path, analog voice is received from the trunk, amplified, and fed to the codec. A portion of the receive signal is output, through a record amplifier, to the customer-furnished recorder (if installed). The codec converts the analog voice signal

| TYPE | SIGNAL | | PIN NUMBERS | | | | | SIGNAL | TYPE |
|---|---|---|---|---|---|---|---|---|---|
| | +24 VA | | 1 | 66 | +24 VA | 131 | +24 VA | | |
| | +24 VB | | 2 | 67 | +24 VB | 132 | +24 VB | | |
| | EMI GND | | 3 | 68 | EMI GND | 133 | EMI GND | | |
| | FSALRM | | 4 | 69 | FSALRM | 134 | FSALRM | | |
| OPEN | TX AUDIO, TX2 | OUT | 5 | 70 | E-2 GND | 135 | OUT | TX1, TX AUDIO | OPEN |
| “ | RX AUDIO, RX2 | IN | 6 | 71 | | 136 | IN | RX1, RX AUDIO | “ |
| “ | PTT (M-LEAD), M | OUT | 7 | 72 | | 137 | OUT | E, E-LEAD | “ |
| “ | RECORD AUDIO, RCDR2 | OUT | 8 | 73 | | 138 | OUT | RCDR1, RECORD AUDIO | “ |
| “ | PTT (SG), SG | OUT | 9 | 74 | | 139 | OUT | SB, PTT (SB) | “ |
| “ | RX CENTER TAP, RXCT | IN | 10 | 75 | | 140 | IN | RXCT, RX CENTER TAP | “ |
| “ | +AUX | OUT | 11 | 76 | | 141 | OUT | -AUX | “ |
| “ | | N/C | 12 | 77 | | 142 | N/C | | “ |
| “ | | N/C | 13 | 78 | | 143 | N/C | | “ |
| “ | | N/C | 14 | 79 | | 144 | N/C | | “ |
| “ | | N/C | 15 | 80 | | 145 | N/C | | “ |
| “ | RX CENTER TAP, RXCT | IN | 16 | 81 | | 146 | IN | TXCT, TX CENTER TAP | “ |
| “ | +AUX | OUT | 17 | 82 | | 147 | OUT | -AUX | “ |
| “ | | N/C | 18 | 83 | | 148 | N/C | | “ |
| “ | | N/C | 19 | 84 | | 149 | N/C | | “ |
| “ | | N/C | 20 | 85 | | 150 | N/C | | “ |
| “ | | N/C | 21 | 86 | | 151 | N/C | | “ |
| “ | | N/C | 22 | 87 | | 152 | N/C | | “ |
| “ | | N/C | 23 | 88 | | 153 | N/C | | “ |
| “ | | N/C | 24 | 89 | E-2 GND | 154 | N/C | | “ |
| “ | | N/C | 25 | 90 | N/C | 155 | N/C | | “ |
| OPEN | M/S PROCESSOR CNTRL, TXD | IN | 26 | 91 | N/C | 156 | N/C | | OPEN |
| BUSSED | CONTROL BUS A, AD0 | I/O | 27 | 92 | E-1 GND | 157 | I/O | BD0 CONTROL BUS B | BUSSED |
| | AD1 | I/O | 28 | 93 | | 158 | I/O | BD1 | |
| “ | AD2 | I/O | 29 | 94 | | 159 | I/O | BD2 | “ |
| | AD3 | I/O | 30 | 95 | | 160 | I/O | BD3 | |
| | AD4 | I/O | 31 | 96 | | 161 | I/O | BD4 | |
| “ | AD5 | I/O | 32 | 97 | | 162 | I/O | BD5 | “ |
| | AD6 | I/O | 33 | 98 | | 163 | I/O | BD6 | |
| | AD7 | I/O | 34 | 99 | | 164 | I/O | BD7 | |
| | AST | I/O | 35 | 100 | | 165 | I/O | BST | |
| | CONTROL BUS A, AIN | I/O | 36 | 101 | | 166 | I/O | BIN, CONTROL BUS B | |
| | CARD SLOT ID, CS0 | IN | 37 | 102 | | 167 | IN | CS1, CARD SLOT ID | |
| | CS2 | IN | 38 | 103 | | 168 | IN | CS3 | |
| | CARD CAGE ID, CC0 | IN | 39 | 104 | | 169 | IN | CC4, CARD CAGE ID | |
| BUSSED | CC3 | IN | 40 | 105 | | 170 | IN | CC2 | |
| (S1, W100) | CC1 | IN | 41 | 106 | E-1 GND | 171 | IN | CS4, CARD SLOT ID | |
| BUSSED | CC5 | IN | 42 | 107 | E-3 GND | 172 | IN | CC6, CARD CAGE ID | |
| | CARD CAGE ID, CC7 | IN | 43 | 108 | | 173 | N/C | | |
| | | N/C | 44 | 109 | | 174 | N/C | | |
| | | N/C | 45 | 110 | | 175 | N/C | | |
| | | N/C | 46 | 111 | | 176 | N/C | | |
| | | N/C | 47 | 112 | | 177 | N/C | | |
| | | N/C | 48 | 113 | | 178 | N/C | | |
| | | N/C | 49 | 114 | | 179 | N/C | | |
| | VOICE DATA BUS DD0+ | I/O | 50 | 115 | | 180 | I/O | DD0-, VOICE DATA BUS | |
| | DD1+ | I/O | 51 | 116 | | 181 | I/O | DD1- | |
| | DD2+ | I/O | 52 | 117 | | 182 | I/O | DD2- | |
| | DD3+ | I/O | 53 | 118 | | 183 | I/O | DD3- | |
| | DD4+ | I/O | 54 | 119 | | 184 | I/O | DD4- | |
| | DD5+ | I/O | 55 | 120 | | 185 | I/O | DD5- | |
| | DD6+ | I/O | 56 | 121 | | 186 | I/O | DD6- | |
| | VOICE DATA BUS, DD7+ | I/O | 57 | 122 | | 187 | I/O | DD7-, VOICE DATA BUS | |
| | UP-LINK B, PCMHB | OUT | 58 | 123 | | 188 | N/C | | |
| | 4.096 MHz CLOCK, 4M+ | IN | 59 | 124 | | 189 | IN | 4M-, 4.096 MHz CLOCK | |
| | SYSTEM FRAME PULSE, FRS+ | IN | 60 | 125 | | 190 | IN | FRS-, SYSTEM FRAME PULSE | |
| | | N/C | 61 | 126 | | 191 | N/C | | |
| | | N/C | 62 | 127 | | 192 | N/C | | |
| | 2.048 MHz CLOCK, 2M+ | IN | 63 | 128 | | 193 | IN | 2M-, 2.048 MHz CLOCK | |
| | UP-LINK A, PCMHA | OUT | 64 | 129 | | 194 | N/C | | |
| BUSSED | | N/C | 65 | 130 | E-3 GND | 195 | N/C | | BUSSED |

N/C = NO CONNECTION (NOT USED)

***Figure 5-29. Remote Radio Processor Input and Output Connections***

***Table 5-21. Remote Radio Processor Unit Strapping***

| JUMPER | PURPOSE | STRAPPING |
|---|---|---|
| W2 | Type 1, trunk & signal side<br>Type 2, trunk & signal side | 2-3<br>1-2 |
| W3 | Type 1, trunk & signal side<br>Type 2, trunk side<br>Type 2, signal side | 2-3<br>1-2<br>2-3 |
| W5 | Watchdog enabled | 1-2* |
| S1** | Type 1, trunk side<br>Type 1, signal side<br>Type 2, trunk & signal side | C1 position<br>C2 position<br>C2 position |
| S2** | Type 1, trunk side<br>Type 1, signal side<br>Type 2, trunk side<br>Type 2, signal side | C1 position<br>C2 position<br>C1 position<br>C2 position |
| S3** | Type 1, trunk & signal side<br>Type 2, trunk side<br>Type 2, signal side | C2 position<br>C2 position<br>C1 position |
| S4** | SF tone: 2600 Hz<br>2400 Hz | C1<br>C2 |
| S5** | E&M<br>SF<br>Align mode | 0<br>2<br>F |
| W1, 4, 6-8 | Not used | N/A |

* ETVS default setting
** Switch setting

to digital voice data and, using timing signals derived from the System clocks and System frame pulse, outputs the digital data in the appropriate time slot on the dual up-link to the System TMUs.

***PTT.*** Instead of using a control loop to provide PTT, the M lead carries the PTT key signal across the trunk. The control register circuit establishes the state of the M lead.

***Lockout.*** To prevent more than one operator from keying the transmitter, the transmitter returns a *lockout* signal that prevents other operators from keying the transmitter at the same time, unless the other operator has preemption privileges.

***Record Audio.*** Portions of the transmit and receive analog audio signals provide output to a customer-furnished legal recorder. During PTT keying, the output is muted by the on-board record mute signal.

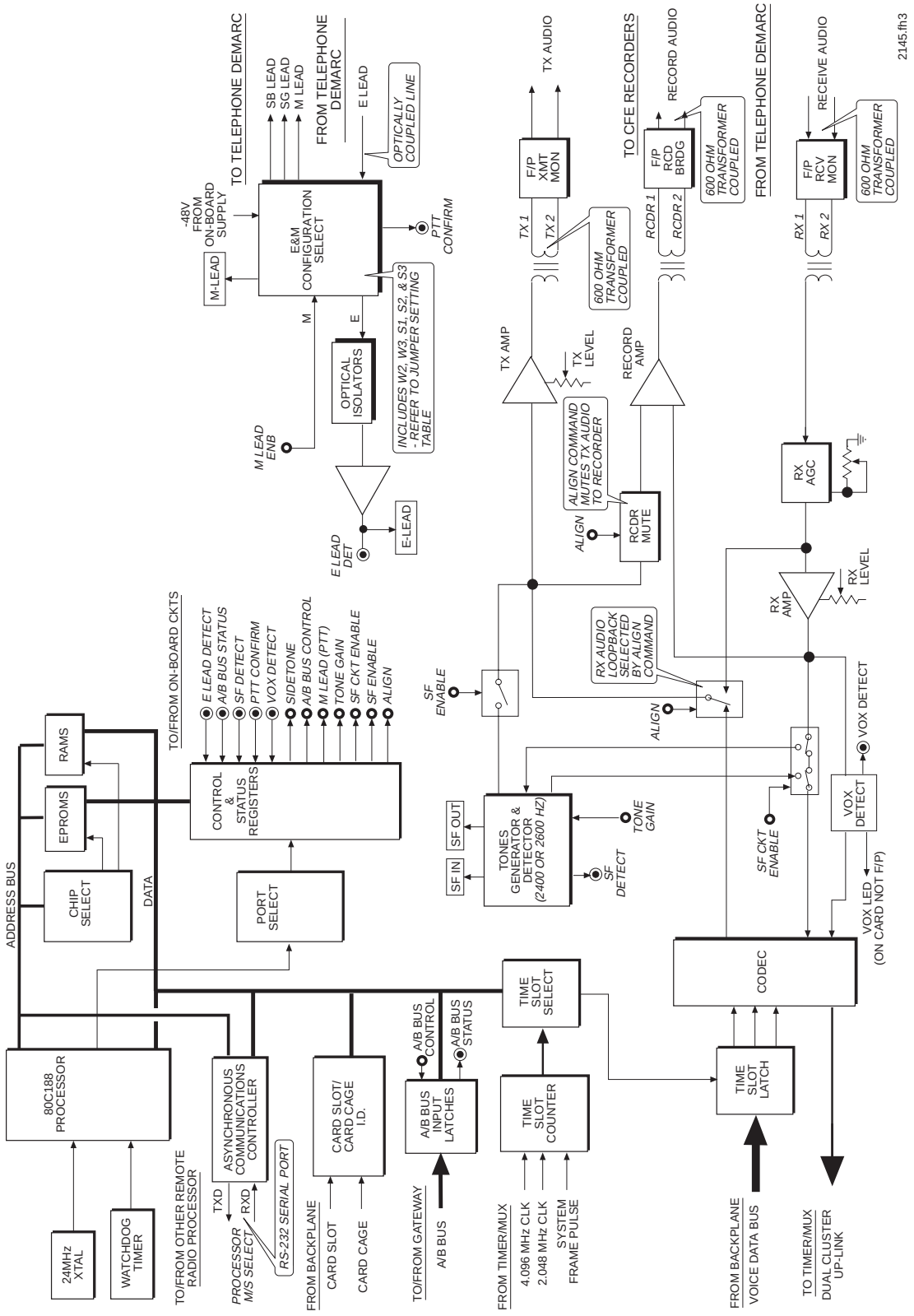


***Figure 5-30. Remote Radio Processor Functional Block Diagram***

***E-, M-, SB-, and SG-Lead Functions.*** The 4/6/8 E&M trunk can be configured for E-lead and M-lead, SB- and SG-lead use. Refer to **Tables 5-20** and **5-21** for the strapping data to set the card up for the desired lead configuration.

***M-lead.*** A dedicated control line used to signal either a PTT keying (for interlocked Remote Radio) or a lockout condition (for interlocking Remote Radio).

***E-Lead.*** A dedicated control line, connected to the other unit's M-Lead, used to detect when the other Remote Radio processor's M-Lead signal is accepted.

***SF Signaling.*** In SF mode, PTT keying and lockout conditions are identified as 2600-Hz or 2400-Hz tones sent and received by the four audio lines.

***VOX Detect.*** When the interlocked end wishes access to a radio asset to make a transmission, it asserts its M-lead to the interlocking end. The interlocking end detects the request on its E-lead and, if the radio asset is available, completes the TX signal path to the radio equipment through the interlocking system.

If the radio asset is not available, the interlocking end asserts its M-lead. The interlocked end detects the lockout message on its E-lead and notifies the position that the frequency is busy.

The RX path, via the interlocking and interlocked systems, is always available for the VOX circuit at the interlocked end to continuously monitor the RX line for incoming audio. When incoming audio is present, the VOX circuit detects the audio and turns on indication at the position and at the board-mounted (not front panel) LED at -25 dBmO (< 20 ms attack) and off at -31 dBmO (2 seconds release) and below.

***Align Mode.*** Position F on the diagnostic switch, S1, places the interface in the align mode. In this mode, the interface is off-line and set up for test and alignment purposes. Align mode opens the TX line from the codec and connects the TX amplifier input to the RX input line after the coupling transformer. It also opens the TX line to the record amplifier. In this mode, the technician may insert test signals at RX BRDG to adjust the gain of the TX amplifier using the front panel XMT LVL potentiometer and measuring the level at TX BRDG.

## 5.9 PARALLEL CONTROL PROCESSOR

The primary function of the Parallel Control Processor is to interface the central rack control data bus with functionally dedicated control lines to and from peripheral equipment. Up to 28 bits are available at the backplane connector for parallel control/status. Sixteen bits are software programmable for either input or output use (input only for ETVS), eight are dedicated outputs and four are dedicated inputs. An RS-232 port and a single-pole single-throw general purpose relay are also provided, but not used in ETVS. Board operation is managed by an 80C186 microprocessor operating at 12 MHz.

In the ETVS System, the Parallel Control Processor interfaces the control data bus with the System Alarm Panel. This enables diagnostic information gathered by the System alarm and diagnostics facilities to be reported to the System Alarm Panel that, in turn, produces an audible and visual alarm. The Parallel Control Processor also enables diagnostic information reported directly to the System Alarm Panel to be displayed at the SCT via the control data bus.

Diagnostic information reported to the System Alarm Panel includes:

- Any system fault (card failure etc.)
- A main power failure

Diagnostic information reported to the SCT by the System Alarm Panel includes:

- Battery failure
- Low battery charge
- Rack overheat condition
- Individual power supply failures
- Facility door open/closed

Control information, originating at the position and reported to the System Alarm Panel includes:

- Door releases
- Door release enable

***Front Panel Controls and Indicators.*** The front panel is illustrated in **Figure 5-31**. **Table 5-22** defines the control and indicator functions.

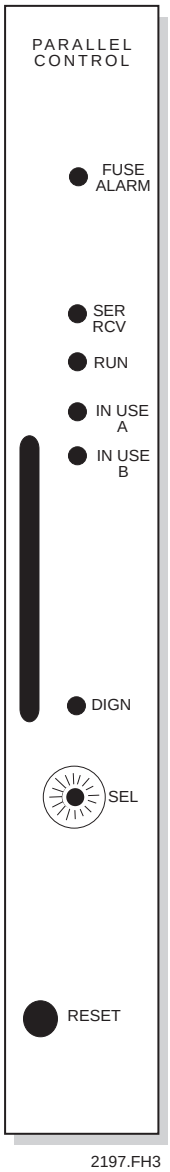


***Figure 5-31. Parallel Control Processor Front Panel***

*Table 5-22. Parallel Control Processor Controls and Indicators*

| NOMENCLATURE | FUNCTION |
|---|---|
| FUSE ALARM | Lights red if fuse blows |
| SER RCV | Not used (Note: Circuit not used; however, LED is in steady on condition [Green] by default.) |
| RUN | Lights green when processor is operating normally |
| IN USE A | A-bus active: steady on, bus error |
| IN USE B | B-bus active: steady on, bus error |
| DIGN | Lights yellow during boot up and diagnostics routines, stays lighted if boot fails. |
| SEL | Set to 0 (zero) for normal use |
| RESET | Pushbutton; press to force reboot |

***Parallel Control Processor Strapping.*** Before installing the parallel control processor unit in the card cage slot, ensure the correct strapping is installed as defined in **Table 5-23**.

*Table 5-23. Parallel Control Processor Unit Strapping*

| JUMPER | PURPOSE | STRAPPING |
|---|---|---|
| W2-W17 | Output bits 00-07 | 1-2* |
| W18 | Watchdog enabled | 1-2* |
| W19 | B-Bus fault correction enabled | 2-3* |
| W20 | A-Bus fault correction enabled | 2-3* |
| W21 | Watchdog time out (1200 ms) | 1-2* |
| W1 | Not used | N/A |

* ETVS default setting

***Input and Output Connections.*** All input and output connections are made at the card edge connector P1. The card cage backplane serves as the interface to this card. **Figure 5-32** illustrates the I/O connections at the card edge connector and identifies the function of the signal connected at each pin.

In **Figure 5-33**, the I/O registers, Byte 1 and Byte 2, accept the individual power supply and facility door status signals as input from the System Alarm Panel. The input registers accept battery, power, and overheat status signals from the System Alarm Panel. The output registers send door release commands and System status signals to the System Alarm Panel. An on-board micro-processor manages control data bus read and write functions.

| TYPE | SIGNAL | | | PIN NUMBERS | | | | SIGNAL | | TYPE |
|---|---|---|---|---|---|---|---|---|---|---|
| | | +24 VA | 1 | 66 | +24 VA | 131 | +24 VA | | | |
| | | +24 VB | 2 | 67 | +24 VB | 132 | +24 VB | | | |
| | | N/C | 3 | 68 | N/C | 133 | N/C | | | |
| | | FSALRM | 4 | 69 | FSALRM | 134 | FSALRM | | | |
| OPEN | BIT 07 | I/O | 5 | 70 | N/C | 135 | IN | EXTERNAL RETURN | | OPEN |
| “ | BIT 06 | I/O | 6 | 71 | | 136 | IN | EXTERNAL RETURN | | “ |
| ” | BIT 05 | I/O | 7 | 72 | | 137 | OUT | BIT 00 | | “ |
| “ | BIT 04 | I/O | 8 | 73 | | 138 | OUT | BIT 01 | | “ |
| “ | BIT 03 | I/O | 9 | 74 | | 139 | OUT | BIT 02 | | “ |
| “ | BIT 02 | I/O | 10 | 75 | | 140 | OUT | BIT 03 | | “ |
| “ | BIT 01 | I/O | 11 | 76 | | 141 | OUT | BIT 04 | | “ |
| “ | BIT 00 | I/O | 12 | 77 | | 142 | OUT | BIT 05 | | “ |
| “ | BIT 08 | I/O | 13 | 78 | | 143 | OUT | BIT 06 | | “ |
| “ | BIT 09 | I/O | 14 | 79 | | 144 | OUT | BIT 07 | | “ |
| ” | BIT 10 | I/O | 15 | 80 | | 145 | IN | BIT 00 | | “ |
| “ | BIT 11 | I/O | 16 | 81 | | 146 | IN | BIT 01 | | “ |
| “ | BIT 12 | I/O | 17 | 82 | | 147 | IN | BIT 02 | | “ |
| “ | BIT 13 | I/O | 18 | 83 | | 148 | IN | BIT 03 | | “ |
| “ | BIT 14 | I/O | 19 | 84 | | 149 | - | DGND | | “ |
| “ | BIT 15 | I/O | 20 | 85 | | 150 | - | DGND | | “ |
| “ | RELAY N.O. | | 21 | 86 | | 151 | | RELAY COM | | “ |
| “ | DGND | - | 22 | 87 | | 152 | - | DGND | | “ |
| “ | DGND | - | 23 | 88 | | 153 | - | DGND | | “ |
| “ | DTR | OUT | 24 | 89 | | 154 | IN | CTS | | “ |
| “ | | N/C | 25 | 90 | | 155 | N/C | | | “ |
| OPEN | XMT DATA RS-232 | OUT | 26 | 91 | | 156 | IN | RCV DATA RS-232 | | OPEN |
| BUSSED | CONTROL BUS, AD0 | I/O | 27 | 92 | | 157 | I/O | BD0 CONTROL BUS B | | BUSSED |
| | AD1 | I/O | 28 | 93 | | 158 | I/O | BD1 | | |
| “ | AD2 | I/O | 29 | 94 | | 159 | I/O | BD2 | | “ |
| | AD3 | I/O | 30 | 95 | | 160 | I/O | BD3 | | |
| | AD4 | I/O | 31 | 96 | | 161 | I/O | BD4 | | |
| “ | AD5 | I/O | 32 | 97 | | 162 | I/O | BD5 | | “ |
| | AD6 | I/O | 33 | 98 | | 163 | I/O | BD6 | | |
| | AD7 | I/O | 34 | 99 | | 164 | I/O | BD7 | | |
| | -AST | I/O | 35 | 100 | | 165 | I/O | -BST | | |
| | CONTROL BUS A, -AIN | I/O | 36 | 101 | | 166 | I/O | -BIN, CONTROL BUS B | | |
| | CARD SLOT ID, CS0 | IN | 37 | 102 | | 167 | IN | CS1, CARD SLOT ID | | |
| | CARD SLOT ID, CS2 | IN | 38 | 103 | | 168 | IN | CS3, CARD SLOT ID | | |
| | CARD CAGE ID, CC0 | IN | 39 | 104 | | 169 | IN | CC4, CARD CAGE ID | | |
| | CARD CAGE ID, CC3 | IN | 40 | 105 | | 170 | IN | CC2, CARD CAGE ID | | |
| (S1, W100) | CARD CAGE ID, CC1 | IN | 41 | 106 | N/C | 171 | IN | CS4, CARD SLOT ID | | |
| | CARD CAGE ID, CC5 | IN | 42 | 107 | DGND | 172 | IN | CC6, CARD CAGE ID | | |
| | | N/C | 43 | 108 | | 173 | N/C | | | |
| | | N/C | 44 | 109 | | 174 | N/C | | | |
| | | N/C | 45 | 110 | | 175 | N/C | | | |
| | | N/C | 46 | 111 | | 176 | N/C | | | |
| | | N/C | 47 | 112 | | 177 | N/C | | | |
| | | N/C | 48 | 113 | | 178 | N/C | | | |
| | | N/C | 49 | 114 | | 179 | N/C | | | |
| | | N/C | 50 | 115 | | 180 | N/C | | | |
| | | N/C | 51 | 116 | | 181 | N/C | | | |
| | | N/C | 52 | 117 | | 182 | N/C | | | |
| | | N/C | 53 | 118 | | 183 | N/C | | | |
| | | N/C | 54 | 119 | | 184 | N/C | | | |
| | | N/C | 55 | 120 | | 185 | N/C | | | |
| | | N/C | 56 | 121 | | 186 | N/C | | | |
| | | N/C | 57 | 122 | | 187 | N/C | | | |
| | | N/C | 58 | 123 | | 188 | N/C | | | |
| | | N/C | 59 | 124 | | 189 | N/C | | | |
| | | N/C | 60 | 125 | | 190 | N/C | | | |
| | | N/C | 61 | 126 | | 191 | N/C | | | |
| | | N/C | 62 | 127 | | 192 | N/C | | | |
| | | N/C | 63 | 128 | | 193 | N/C | | | |
| | | N/C | 64 | 129 | | 194 | N/C | | | |
| BUSSED | | N/C | 65 | 130 | DGND | 195 | N/C | | | BUSSED |

INPUT LINES FOR POWER SUPPLY AND FACILITY ACCESS DOOR STATUS

FROM THE SYSTEM ALARM PANEL

CONTROL LINES TO SYSTEM ALARM PANEL FOR FACILITY DOOR RELEASE & SYSTEM FAULTY

STATUS LINES FROM SYSTEM ALARM PANEL

N/C = NO CONNECTION (NOT USED)

***Figure 5-32. Parallel Control Processor Input and Output Connections***

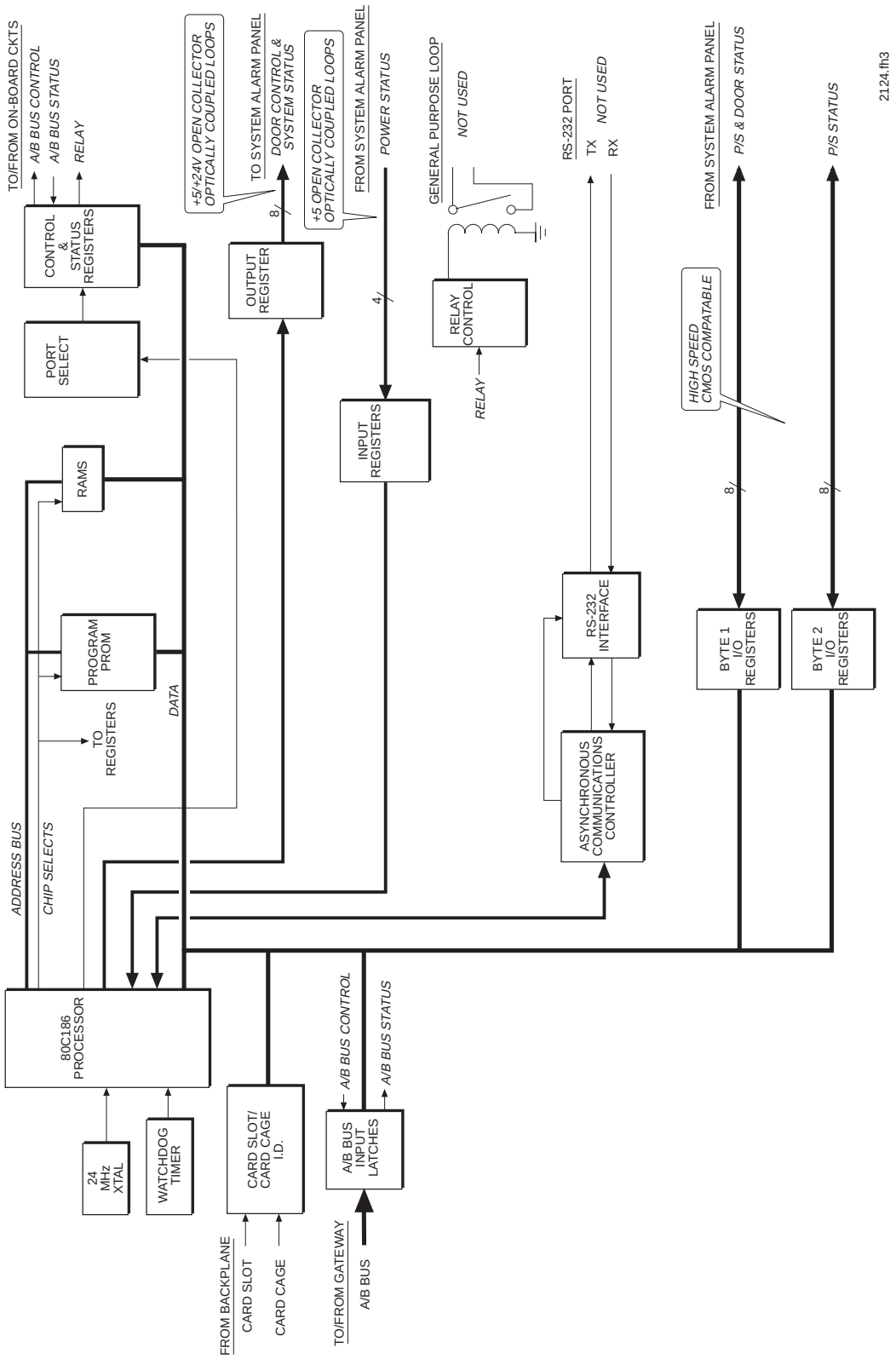


*Figure 5-33. Parallel Control Processor Functional Block Diagram*

## 5.10 ENHANCED OPERATOR PROCESSOR

The Enhanced Operator Processor card interfaces the voice data, tones data, and control data of one operator position with the central rack equipment. It is also used for call forward chaining. The card is available in two versions: one to interface normal positions and the other to interface split positions. The normal version supports only one ISDN link whereas the split version supports two ISDN links: one for the A/G operator and one for the G/G operator. The ISDN link(s) provides communication between the Operator Processor and the position equipment. Board operation is managed by an 80C188 microprocessor operating at 25 MHz.

The Enhanced Operator Processor card has up to 512K RAM and up to 256 KB PROM by changing jumpers. By default, the card is set to a single RAM of maximum memory size. The default Program Memory is set to a single PROM of 256 KB. See strapping table (**Table 5-25**) for actual settings.

The CCA board population for the non-split position differs slightly from that of the split position (compare **Figures A-12** and **A-13**). For example, in **Figure A-12**, for the non-split position, the non-split position card does not have components such as T3, T4, U54, and U22. In addition, the split position card uses an additional jumper, W2, which is not used in the non-split CCAs.

In addition to the ISDN I/O, the unit has auxiliary back door ST-bus ports to the Cross-point switch (CPS). These ports allow additional channels on a second voice data bus to be accessed by the CPS. They interface with the second voice data bus through a conferencer that has access to the second bus.

Supervisor positions also use this card as an interface to pick off audio channels from the voice data bus that the supervisor wishes to record at the supervisor position recorders. The card has different firmware installed for the recorder interface application. The Operator Processor (Supervisory Record ) is described in the paragraph 5.11.

***Front Panel Controls and Indicators.*** **Figure 5-34** illustrates the front panel. **Table 5-24** defines the control and indicator functions.

***Operator Processor Strapping.*** Before installing the card in the card cage slot, ensure that the correct strapping is installed as defined in **Table 5-25**.

***Input and Output Connections.*** All input and output connections are made at the card edge connector P1. The card cage backplane serves as the interface to this card. **Figure 5-35** illustrates the I/O connections at the card edge connector and identifies the function of the signal connected at each pin.

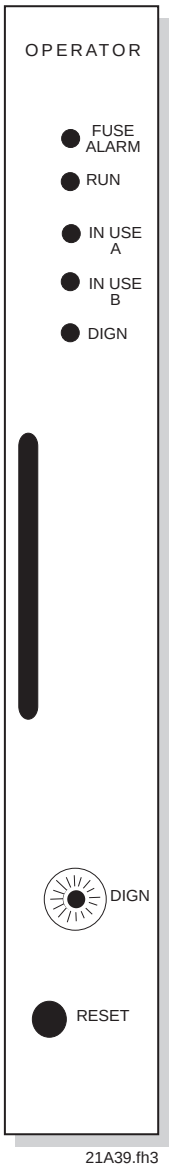


***Figure 5-34. Enhanced Operator Processor Front Panel***

***Signal Path Conventions.*** To be consistent with the radio and telephone cards, consider signals originating at the position microphone as receive signals to the central equipment. Thus, microphone signals use the RX ports of the SNIC

***Table 5-24. Enhanced Operator Processor Front Panel Controls and Indicators***

| NOMENCLATURE | FUNCTION |
|---|---|
| FUSE ALARM | Lights red if fuse blows |
| RUN | Lights green when CPU normal, flashes when processor is not running |
| A IN USE | A-bus active: steady on, bus error |
| B IN USE | B-bus active: steady on, bus error |
| DIGN (LED) | Lights yellow during boot-up and diagnostics routines: flashes if primary ISDN link is down, solid on if secondary link is down |
| DIGN (Switch) | Set to 0 for normal use |
| RESET | Pushbutton: press to force reboot |

***Table 5-25. Enhanced Operator Processor Unit Strapping***

| JUMPER (see NOTE) | PURPOSE | STRAPPING |
|---|---|---|
| W5 | Watchdog (Timer) enabled | None* |
| W8 | Memory map (Old) | 1-2 |
| | (New) | 2-3* |
| W11 | Audio Selection | |
| | U-Law Select | 1-2* |
| | A-Law Select | 2-3 |
| S1** | Normal | 0 |

* ETVS default settings
** Switch setting
NOTE: For split-position cards only, W2 setting is as follows: EPROM, 2048K, 1-2, Option, other, 2-3

(Subscriber Network Interface Circuit) on the Operator Processor card. This paragraph refers to this path as the microphone audio path. The CPS switches the microphone voice data on this path to the up-link.

Consider signals destined for the position headset or speaker as transmit signals. Headset and speaker signals use the TX ports of the SNICs. This paragraph refers to these paths as the headset and speaker audio paths. The Operator Processor demultiplexes the speaker and headset data from the voice data bus, sums and multiplexes the data into the appropriate ISDN channels, and sends it to the position equipment.

| TYPE | SIGNAL | | PIN NUMBERS | | | | | SIGNAL | TYPE |
|---|---|---|---|---|---|---|---|---|---|
| | +24 VA | | 1 | 66 | +24 VA | 131 | +24 VA | | |
| | +24 VB | | 2 | 67 | +24 VB | 132 | +24 VB | | |
| | EMI GND | | 3 | 68 | N/C | 133 | N/C | | |
| | FSALRM | | 4 | 69 | FSALRM | 134 | FSALRM | | |
| OPEN | MIC NORMAL, OPRX2 | IN | 5 | 70 | E-2 GND | 135 | IN | OPRX1, MIC NORMAL | OPEN |
| " | HDST/SPKR NORMAL, OPTX1 | OUT | 6 | 71 | | 136 | OUT | OPTX2, HDST/SPKR NORMAL | " |
| " | MIC SPLIT, SPRX2 | IN | 7 | 72 | | 137 | IN | SPRX1, MIC SPLIT | " |
| " | HDST/SPKR SPLIT, SPTX1 | OUT | 8 | 73 | | 138 | OUT | SPTX2, HDST/SPKR SPLIT | " |
| " | | N/C | 9 | 74 | | 139 | N/C | | " |
| " | | N/C | 10 | 75 | | 140 | N/C | | " |
| " | | N/C | 11 | 76 | | 141 | N/C | | " |
| " | | N/C | 12 | 77 | | 142 | N/C | | " |
| " | | N/C | 13 | 78 | | 143 | N/C | | " |
| " | | N/C | 14 | 79 | | 144 | N/C | | " |
| " | | N/C | 15 | 80 | | 145 | N/C | | " |
| " | | N/C | 16 | 81 | | 146 | N/C | | " |
| " | | N/C | 17 | 82 | | 147 | N/C | | " |
| " | | N/C | 18 | 83 | | 148 | N/C | | " |
| " | | N/C | 19 | 84 | | 149 | N/C | | " |
| " | | N/C | 20 | 85 | | 150 | N/C | | " |
| " | BACK DOOR ST, ACI 0 | IN | 21 | 86 | | 151 | OUT | ACO 0, BACK DOOR ST | " |
| " | MAINT ACC. ST, ACI1 | IN | 22 | 87 | | 152 | OUT | ACO 1, MAINT ACC. ST | " |
| " | ACI 2 | IN | 23 | 88 | | 153 | OUT | ACO 2 | " |
| " | BACK DOOR ST, ACI 3 | IN | 24 | 89 | E-2 GND | 154 | OUT | ACO 3 | " |
| " | BACK DOOR ST DIFF, ACI 3+ | IN | 25 | 90 | N/C | 155 | OUT | ACO 3-, BACK DOOR ST DIFF | " |
| OPEN | BACK DOOR ST DIFF, ACI 2+ | IN | 26 | 91 | N/C | 156 | OUT | ACO 2-, BACK DOOR ST DIFF | OPEN |
| BUSSED | CONTROL BUS A, AD0 | I/O | 27 | 92 | E-1 GND | 157 | I/O | BD0, CONTROL BUS B | BUSSED |
| | AD1 | I/O | 28 | 93 | | 158 | I/O | BD1 | |
| " | AD2 | I/O | 29 | 94 | | 159 | I/O | BD2 | " |
| | AD3 | I/O | 30 | 95 | | 160 | I/O | BD3 | |
| | AD4 | I/O | 31 | 96 | | 161 | I/O | BD4 | |
| " | AD5 | I/O | 32 | 97 | | 162 | I/O | BD5 | " |
| | AD6 | I/O | 33 | 98 | | 163 | I/O | BD6 | |
| | AD7 | I/O | 34 | 99 | | 164 | I/O | BD7 | |
| | AST | I/O | 35 | 100 | | 165 | I/O | BST | |
| | CONTROL BUS A, AIN | I/O | 36 | 101 | | 166 | I/O | BIN, CONTROL BUS B | |
| | CARD SLOT ID, CS0 | IN | 37 | 102 | | 167 | IN | CS1, CARD SLOT ID | |
| | CARD SLOT ID, CS2 | IN | 38 | 103 | | 168 | IN | CS3, CARD SLOT ID | |
| | CARD CAGE ID, CC0 | IN | 39 | 104 | | 169 | IN | CC4, CARD CAGE ID | |
| BUSSED | CARD CAGE ID, CC3 | IN | 40 | 105 | | 170 | IN | CC2, CARD CAGE ID | |
| (S1, W100) | CARD CAGE ID, CC1 | IN | 41 | 106 | E-1 GND | 171 | IN | CS4, CARD SLOT ID | |
| BUSSED | CARD CAGE ID, CC5 | IN | 42 | 107 | E-3 GND | 172 | IN | CC6, CARD CAGE ID | |
| | CARD CAGE ID, CC7 | IN | 43 | 108 | | 173 | N/C | | |
| | | N/C | 44 | 109 | | 174 | N/C | | |
| | | N/C | 45 | 110 | | 175 | N/C | | |
| | | N/C | 46 | 111 | | 176 | N/C | | |
| | | N/C | 47 | 112 | | 177 | N/C | | |
| | | N/C | 48 | 113 | | 178 | N/C | | |
| | | N/C | 49 | 114 | | 179 | N/C | | |
| | VOICE DATA BUS, DD0+ | I/O | 50 | 115 | | 180 | I/O | DD0-, VOICE DATA BUS | |
| | DD1+ | I/O | 51 | 116 | | 181 | I/O | DD1- | |
| | DD2+ | I/O | 52 | 117 | | 182 | I/O | DD2- | |
| | DD3+ | I/O | 53 | 118 | | 183 | I/O | DD3- | |
| | DD4+ | I/O | 54 | 119 | | 184 | I/O | DD4- | |
| | DD5+ | I/O | 55 | 120 | | 185 | I/O | DD5- | |
| | DD6+ | I/O | 56 | 121 | | 186 | I/O | DD6- | |
| | VOICE DATA BUS, DD7+ | I/O | 57 | 122 | | 187 | I/O | DD7-, VOICE DATA BUS | |
| | UP-LINK B, PCMHI B | OUT | 58 | 123 | | 188 | N/C | | |
| | 4.096 MHz CLOCK, 4M+ | IN | 59 | 124 | | 189 | IN | 4M-, 4.096 MHz CLOCK | |
| | SYSTEM FRAME PULSE, FRS+ | IN | 60 | 125 | | 190 | IN | FRS-, SYSTEM FRAME PULSE | |
| | | N/C | 61 | 126 | | 191 | N/C | | |
| | | N/C | 62 | 127 | | 192 | N/C | | |
| | 2.048 MHz CLOCK, 2M+ | IN | 63 | 128 | | 193 | IN | 2M-, 2.048 MHz CLOCK | |
| | UP-LINK A, , PCMHI A | OUT | 64 | 129 | | 194 | N/C | | |
| BUSSED | | N/C | 65 | 130 | E-3 GND | 195 | N/C | | BUSSED |

N/C = NO CONNECTION (NOT USED)

***Figure 5-35. Operator Processor Input and Output Connections***

***Table 5-26. ISDN Channel Allocation***

| LINK | B1 Channel | B2 Channel | D Channel |
|---|---|---|---|
| To Non-split Position: | | | |
| ISDN#1 | HDST voice | SPKR voice | Control/Status |
| From Non-split Position: | | | |
| ISDN#1 | MIC voice | Diagnostics | Control/Status |
| To Split Position: | | | |
| ISDN#1 | HDST voice 1 | SPKR voice 1 | Control/Status |
| ISDN#2 | HDST voice 2 | SPKR voice 2 | Control/Status |
| From Split Position: | | | |
| ISDN#1 | MIC voice 1 | Diagnostics | Control/Status |
| ISDN#2 | MIC voice 2 | Diagnostics | Control/Status |

ISDN#1 = Primary
ISDN#2 = Secondary

ISDN format consists of two voice data words (B channels) and one control data word (D channel) in each time slot of a 32-channel message frame that is multiplexed into a serial synchronous bit stream. Voice, control, and status data is allocated to one of the ISDN words, depending on its destination as defined in **Table 5-26.**

***Down-Link.*** Refer to **Figure 5-36.** Two summers pick off and sum all voice channels currently selected by the operator from the down-link voice data bus. Each summer supplies a headset and speaker output to the CPS and builds conferences of voice channels at each output.

Summer A builds conferences for the non-split position or normal operator of a split position and summer B builds conferences for the split operator of a split position. These outputs form the headset/speaker audio paths to the position. Parallel-to-serial converters on each path produces serial ST streams to the ST-input ports of the CPS.

The CPS switches the summer A outputs to the normal position SNIC and the summer B outputs to the split position SNIC.

The SNICs multiplex the headset and speaker sums for each position to the appropriate channel in the ISDN bit stream (along with control data) as defined by **Table 5-26.** A 50-ohm transformer couples the final output from each SNIC to the ISDN line.

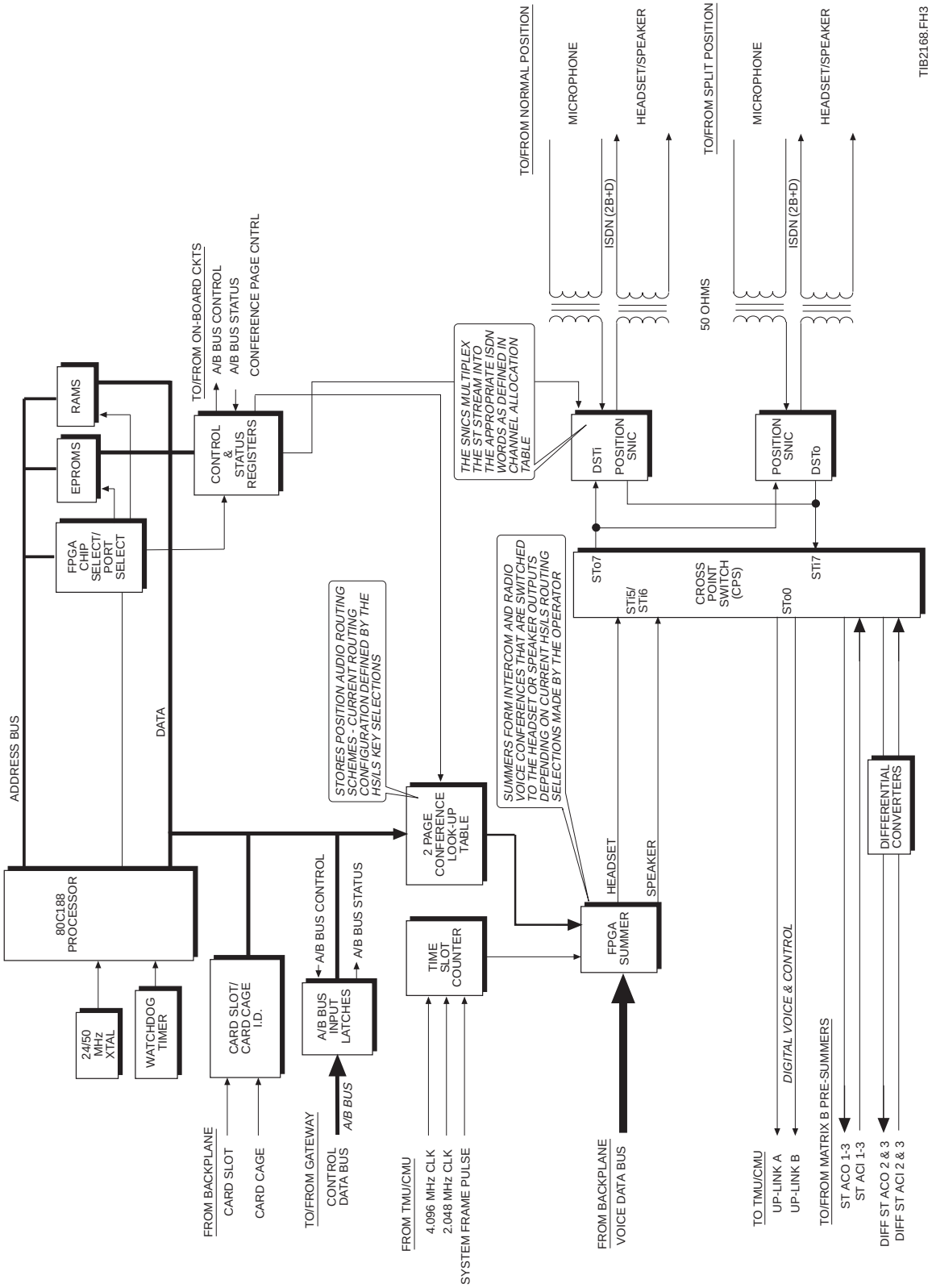


***Figure 5-36. Enhanced Operator Processor Functional Block Diagram***

***Up-link.*** Control, maintenance, and status data and microphone audio from the non-split and split positions are processed in the up-link. The two SNICs interface the ISDN bit streams from the non-split and split positions with the ST-bus lines to the CPS. The microprocessor port of the CPS extracts status and control data from the ST-bus. The CPS internal data memory writes the status and control data to the microprocessor port. This information is sent to the appropriate destination in the system over the control data bus. Some control data is used by the operator processor card.

The CPS also switches the microphone path voice data on the ST-bus from the SNICs to the appropriate slot in the dual cluster up-link to the TMU/CMU.

***Summers.*** Because headset and speaker audio is sent to different terminations at the position, conferences are formed of all the signals destined for a particular termination. The number of conferences depends on the configuration of the System and the types of communications being switched.

The ETVS System requires five conferences for each position as follows:

- Radio HDST — Radio audio to position HDST
- Intercom HDST — Intercom and telephone audio to position HDST
- Radio SPKR — Radio audio to position SPKR
- Intercom SPKR — Intercom and telephone audio to position SPKR
- Voice override — Voice call to position SPKR

Thus, the conferences required at any given time are summed and multiplexed into the appropriate ISDN data stream to either the headset or speaker.

To accomplish the volume of summing taking place, two versions of an FPGA summer are employed. The non-split version has resources for summing conferencers in the normal position. The split version has resources for summing A/G and G/G audio. In the older version of this card, Summer “A” sums conferences for the normal position and Summer “B” performs the same function for the split position.

A look-up table provides the summers with the basic audio routing scheme of the position. Audio routing selections made by the operator using the HS/LS keys affect the current routing. Each summer outputs a headset sum and a speaker sum to the CPS, based on the current routing scheme required by the position operator.

***Cross-Point Switch (CPS).*** The CPS switches channel data in either direction between the input and output ST streams. It organizes the Summer A and Summer B conference streams in the required order for input to each of the SNICs. In the headset/speaker audio path, it switches the ST stream from Summer A at Sti6 and the ST stream from summer B at Sti5 to Sto7 that is connected to DSTi of the SNICs.

In the microphone path, it switches the DSTo output from the SNICs at Sti7 to Sto0, that is connected to the dual cluster up-link buses.

***Subscriber Network Interface Circuit (SNIC).*** The function of the SNICs is to convert the ST-bus bit stream of the CPS to the 2B+D format of the ISDN link. Data flow through the device is bi-directional. **Table 5-26** defines the allocation of channels on the ISDN lines performed by the SNICs.

***Back Door Auxiliary ST-Buses.*** In large switching systems that use two voice data buses to achieve a greater channel capacity, the back door ST ports enable the Operator Processor to access the additional channels available on the second voice data bus. This I/O uses the ACI/O ST lines of the CPSs in the Operator Processor and a Pre-selector Conferencer to provide access to the second voice data bus. On the Operator Processor card, the back door I/O lines use CPS ST I/O ports Sti0, 2, 3, and 4 and Sto2 through 5. The single ended ST I/O lines interface the Operator Processor with the Maintenance Access Unit for diagnostic loopback or position monitoring purposes.

## 5.11 OPERATOR PROCESSOR (SUPERVISORY RECORD)

The Supervisory Record Processor card interfaces the Supervisory Record Interface unit with the central rack equipment. Using the SCT, the Supervisor can program the card to route any two to the position record channels on the voice data bus to the Supervisory Record Interface. A single ISDN link connects the card to the interface unit. All position audio activity is present in the position record audio path.

This card is similar to the non-split Operator Processor card, but has different firmware and a 12 MHz clock speed (vice 25 MHz). For generic information, refer to **Figure 5-36**, Enhanced Operator Processor Functional Block Diagram. On the Supervisory Record version of the card, Summer A performs all channel selection and summing, and the receive path is unused.

***Front Panel Controls and Indicators.*** The front panel controls and indicators are the same as for the Operator Processor.

***Input and Output Connections.*** All input and output connections are made at the card edge connector P1. The card cage backplane serves as the interface to this card. **Figure 5-37** illustrates the I/O connections at the card edge connector and identifies the function of the signal connected at each pin. ***ISDN*** *Channel Allocation*, **Table 5-27**, defines the channel allocations for record audio on the transmit line of ISDN#1**.**

***Table 5-27. Supervisory Record ISDN Channel Allocation***

| LINK | B1 Channel | B2 Channel | D Channel |
|---|---|---|---|
| To Supervisor Recorder Interface: | | | |
| ISDN#1 | RCRD Chs1 | RCRD Chs2 | Not used |
| ISDN#2 | Not used | Not used | Not used |

***Operator Processor (Supervisory Record) Strapping.*** Before installing the card in the card cage slot, ensure that the correct strapping is installed as defined in **Table 5-28**.

***Table 5-28. Operator Processor (Supervisory Record) Unit Strapping***

| JUMPER | PURPOSE | STRAPPING |
|---|---|---|
| W1 | Watchdog enabled | 1-2* |
| W3 | EPROM summer size (64 K) | 2-3* |
| W5 | EPROM size (128 K)<br>(256 K) | 1-2*<br>2-3 |
| W8 | RAM size (512 K)<br>(256 K) | 1-2<br>2-3* |
| S1** | Normal | 0* |
| W2, 4, 6, 7, 9-12 | Not used | N/A |

* ETVS default setting
** Switch setting

## 5.12 GATEWAY INTERFACE

These cards interface the control data buses with the Gateway Computers to which the CCS LANs are also connected. Refer to **Figure 4-17**. An additional interface board, the FIFO Interface, is required to buffer the communications between the Gateway Computer and the Gateway Interface. The FIFO is installed in one of the expansion slots of the Gateway Computer. Board operation is managed by an 80C186 microprocessor operating at 12 MHz.

| TYPE | SIGNAL | | PIN NUMBERS | | | | | SIGNAL | TYPE |
|---|---|---|---|---|---|---|---|---|---|
| | +24 VA | | 1 | 66 | +24 VA | 131 | +24 VA | | |
| | +24 VB | | 2 | 67 | +24 VB | 132 | +24 VB | | |
| | EMI GND | | 3 | 68 | EMI | 133 | EMI GND | | |
| | FSALRM | | 4 | 69 | FSALRM | 134 | FSALRM | | |
| OPEN | | N/C | 5 | 70 | N/C | 135 | N/C | | OPEN |
| " | | N/C | 6 | 71 | | 136 | N/C | | " |
| " | NOT USED | IN | 7 | 72 | | 137 | IN | NOT USED | " |
| " | RECORD AUDIO 2 | OUT | 8 | 73 | | 138 | OUT | RECORD AUDIO 1 | " |
| " | | N/C | 9 | 74 | | 139 | N/C | | " |
| " | | N/C | 10 | 75 | | 140 | N/C | | " |
| " | | N/C | 11 | 76 | | 141 | N/C | | " |
| " | | N/C | 12 | 77 | | 142 | N/C | | " |
| " | | N/C | 13 | 78 | | 143 | N/C | | " |
| " | | N/C | 14 | 79 | | 144 | N/C | | " |
| " | | N/C | 15 | 80 | | 145 | N/C | | " |
| " | | N/C | 16 | 81 | | 146 | N/C | | " |
| " | | N/C | 17 | 82 | | 147 | N/C | | " |
| " | | N/C | 18 | 83 | | 148 | N/C | | " |
| " | | N/C | 19 | 84 | | 149 | N/C | | " |
| " | | N/C | 20 | 85 | | 150 | N/C | | " |
| " | | N/C | 21 | 86 | | 151 | N/C | | " |
| " | | N/C | 22 | 87 | | 152 | N/C | | " |
| " | | N/C | 23 | 88 | | 153 | N/C | | " |
| " | | N/C | 24 | 89 | N/C | 154 | N/C | | " |
| " | | N/C | 25 | 90 | SW1 | 155 | N/C | | " |
| OPEN | | N/C | 26 | 91 | SW2 | 156 | N/C | | OPEN |
| BUSSED | CONTROL BUS A, AD0 | I/O | 27 | 92 | N/C | 157 | I/O | BD0, CONTROL BUS B | BUSSED |
| | AD1 | I/O | 28 | 93 | | 158 | I/O | BD1 | |
| " | AD2 | I/O | 29 | 94 | | 159 | I/O | BD2 | " |
| | AD3 | I/O | 30 | 95 | | 160 | I/O | BD3 | |
| | AD4 | I/O | 31 | 96 | | 161 | I/O | BD4 | |
| " | AD5 | I/O | 32 | 97 | | 162 | I/O | BD5 | " |
| | AD6 | I/O | 33 | 98 | | 163 | I/O | BD6 | |
| | AD7 | I/O | 34 | 99 | | 164 | I/O | BD7 | |
| | AST | I/O | 35 | 100 | | 165 | I/O | BST | |
| | CONTROL BUS A, AIN | I/O | 36 | 101 | | 166 | I/O | BIN, CONTROL BUS B | |
| | CARD SLOT ID, CS0 | IN | 37 | 102 | | 167 | IN | CS1, CARD SLOT ID | |
| | CARD SLOT ID, CS2 | IN | 38 | 103 | | 168 | IN | CS3, CARD SLOT ID | |
| | CARD CAGE ID, CC0 | IN | 39 | 104 | | 169 | IN | CC4, CARD CAGE ID | |
| BUSSED | CARD CAGE ID, CC3 | IN | 40 | 105 | | 170 | IN | CC2, CARD CAGE ID | |
| (S1, W100) | CARD CAGE ID, CC1 | IN | 41 | 106 | N/C | 171 | IN | CS4, CARD SLOT ID | |
| BUSSED | CARD CAGE ID, CC5 | IN | 42 | 107 | DGND | 172 | IN | CC6, CARD CAGE ID | |
| | | N/C | 43 | 108 | | 173 | N/C | | |
| | | N/C | 44 | 109 | | 174 | N/C | | |
| | | N/C | 45 | 110 | | 175 | N/C | | |
| | | N/C | 46 | 111 | | 176 | N/C | | |
| | | N/C | 47 | 112 | | 177 | N/C | | |
| | | N/C | 48 | 113 | | 178 | N/C | | |
| | | N/C | 49 | 114 | | 179 | N/C | | |
| | VOICE DATA BUS, DD0+ | I/O | 50 | 115 | | 180 | I/O | DD0-, VOICE DATA BUS | |
| | DD1+ | I/O | 51 | 116 | | 181 | I/O | DD1- | |
| | DD2+ | I/O | 52 | 117 | | 182 | I/O | DD2- | |
| | DD3+ | I/O | 53 | 118 | | 183 | I/O | DD3- | |
| | DD4+ | I/O | 54 | 119 | | 184 | I/O | DD4- | |
| | DD5+ | I/O | 55 | 120 | | 185 | I/O | DD5- | |
| | DD6+ | I/O | 56 | 121 | | 186 | I/O | DD6- | |
| | VOICE DATA BUS, DD7+ | I/O | 57 | 122 | | 187 | I/O | DD7-, VOICE DATA BUS | |
| | UP-LINK B, PCMHI B | N/C | 58 | 123 | | 188 | N/C | | |
| | 4.096 MHz CLOCK, 4M+ | IN | 59 | 124 | | 189 | IN | 4M-, 4.096 MHz CLOCK | |
| | SYSTEM FRAME PULSE, FRS+ | IN | 60 | 125 | | 190 | IN | FRS-, SYSTEM FRAME PULSE | |
| | | N/C | 61 | 126 | | 191 | N/C | | |
| | | N/C | 62 | 127 | | 192 | N/C | | |
| | 2.048 MHz CLOCK, 2M+ | IN | 63 | 128 | | 193 | IN | 2M-, 2.048 MHz CLOCK | |
| | UP-LINK A, , PCMHI A | N/C | 64 | 129 | | 194 | N/C | | |
| BUSSED | | N/C | 65 | 130 | DGND | 195 | N/C | | BUSSED |

N/C = NO CONNECTION (NOT USED)

***Figure 5-37. Operator Processor (Supervisory Record) Input and Output Connections***

***Front Panel Controls and Indicators.*** The front panel is illustrated in **Figure 5-38. Table 5-29** defines the control and indicator functions.

***Table 5-29. Gateway Interface Front Panel Controls and Indicators***

| NOMENCLATURE | FUNCTION |
|---|---|
| FUSE ALARM | Lights red if fuse blows |
| IN USE A | A-bus active: steady on, bus error |
| IN USE B | B-bus active: steady on, bus error |
| RUN | Lights green when processor active |
| SER RCV | Not used (NOTE: Circuit not used; however, LED is in steady on condition [Green] by default.) |
| DIGN | Lights yellow during boot-up and diagnostics routines, stays lighted if boot fails. |
| RESET | Pushbutton: press to force reboot |

***Input and Output Connections.*** All input and output connections are made at the card edge connector P1. The card cage backplane serves as the interface to this card. **Figure 5-39** illustrates the I/O connections at the card edge connector and identifies the function of the signal connected at each pin.

***Gateway Strapping.*** Before installing the card in the card cage slot, ensure that the correct strapping is installed as defined in **Table 5-30**.

***Table 5-30. Gateway Interface Strapping***

| JUMPER | PURPOSE | STRAPPING |
|---|---|---|
| W1 | A-bus fault correction enabled | 2-3* |
| W4 | B-bus fault correction enabled | 2-3* |
| W5 | Watchdog enabled | 1-2* |
| W14 | UART type (82510) | 2-3* |
| W15 | Normal | 1-2* |
| W16 | Normal | 1-2* |
| W17 | Watchdog time out (1200 ms) | 1-2* |
| S1** | Not used | N/A |
| S2** | Not used | N/A |
| S3** | Not used | N/A |
| S4** | Normal | 0 |
| W2, 3, 6-13 | Not used | N/A |

** Switch setting

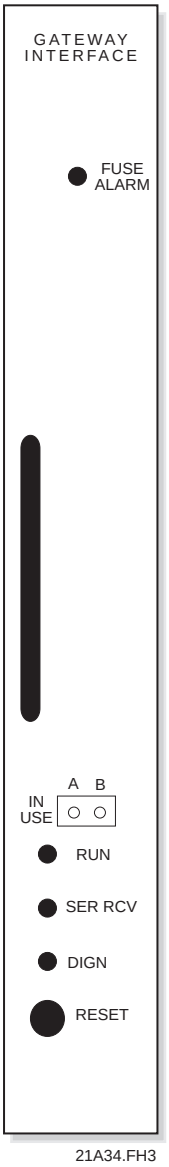


*Figure 5-38. Gateway Interface Front Panel*

| TYPE | SIGNAL | | PIN NUMBERS | | | | | SIGNAL | TYPE |
|---|---|---|---|---|---|---|---|---|---|
| | +24 VA | | 1 | 66 | +24 VA | 131 | +24 VA | | |
| | +24 VB | | 2 | 67 | +24 VB | 132 | +24 VB | | |
| | N/C | | 3 | 68 | N/C | 133 | N/C | | |
| | FSALRM | | 4 | 69 | FSALRM | 134 | FSALRM | | |
| OPEN | | N/C | 5 | 70 | E-2 GND | 135 | N/C | | OPEN |
| “ | PERIPHERAL DATA LINK, XPA1 | I/O | 6 | 71 | | 136 | I/O | XPA0, PERIPHERAL DATA LINK | “ |
| “ | XPA3 | I/O | 7 | 72 | | 137 | I/O | XPA2 | “ |
| “ | XPA5 | I/O | 8 | 73 | | 138 | I/O | XPA4 | “ |
| “ | XPA7 | I/O | 9 | 74 | | 139 | I/O | XPA6 | “ |
| “ | XPD1 | I/O | 10 | 75 | | 140 | I/O | XPD0 | “ |
| “ | XPD3 | I/O | 11 | 76 | | 141 | I/O | XPD2 | “ |
| “ | XPD5 | I/O | 12 | 77 | | 142 | I/O | XPD4 | “ |
| “ | PERIPHERAL DATA LINK, XPD7 | I/O | 13 | 78 | | 143 | I/O | XPD6, PERIPHERAL DATA LINK | “ |
| “ | | N/C | 14 | 79 | | 144 | N/C | | “ |
| “ | | N/C | 15 | 80 | | 145 | N/C | | “ |
| “ | | N/C | 16 | 81 | | 146 | I/O | /RST2, PERIPHERAL HANDSHAKE | “ |
| “ | | N/C | 17 | 82 | | 147 | I/O | PERIPHERAL HANDSHAKE | “ |
| “ | | N/C | 18 | 83 | | 148 | I/O | WR, PERIPHERAL HANDSHAKE | “ |
| “ | | N/C | 19 | 84 | | 149 | N/C | | “ |
| “ | | N/C | 20 | 85 | | 150 | N/C | | “ |
| “ | | N/C | 21 | 86 | | 151 | N/C | | “ |
| “ | | N/C | 22 | 87 | | 152 | N/C | | “ |
| “ | | N/C | 23 | 88 | | 153 | N/C | | “ |
| “ | | N/C | 24 | 89 | E-2 GND | 154 | N/C | | “ |
| “ | PERIPHERAL HANDSHAKE | I/O | 25 | 90 | ISDNLIN1 | 155 | N/C | | “ |
| OPEN | | N/C | 26 | 91 | ISDNLIN2 | 156 | N/C | | OPEN |
| BUSSED | CONTROL BUS, AD0 | I/O | 27 | 92 | E-1 GND | 157 | I/O | BD0 CONTROL BUS B | BUSSED |
| | AD1 | I/O | 28 | 93 | | 158 | I/O | BD1 | |
| “ | AD2 | I/O | 29 | 94 | | 159 | I/O | BD2 | “ |
| | AD3 | I/O | 30 | 95 | | 160 | I/O | BD3 | |
| | AD4 | I/O | 31 | 96 | | 161 | I/O | BD4 | |
| “ | AD5 | I/O | 32 | 97 | | 162 | I/O | BD5 | “ |
| | AD6 | I/O | 33 | 98 | | 163 | I/O | BD6 | |
| | AD7 | I/O | 34 | 99 | | 164 | I/O | BD7 | |
| | -AST | I/O | 35 | 100 | | 165 | I/O | -BST | |
| | CONTROL BUS A, -AIN | I/O | 36 | 101 | | 166 | I/O | -BIN, CONTROL BUS B | |
| | CARD SLOT ID, CS0 | I/O | 37 | 102 | | 167 | IN | CS1, CARD SLOT ID | |
| | CARD SLOT ID, CS2 | I/O | 38 | 103 | | 168 | IN | CS3, CARD SLOT ID | |
| | CARD CAGE ID, CC0 | I/O | 39 | 104 | | 169 | IN | CC4, CARD CAGE ID | |
| | CARD CAGE ID, CC3 | I/O | 40 | 105 | | 170 | IN | CC2, CARD CAGE ID | |
| | (S1, W100) CARD CAGE ID, CC1 | I/O | 41 | 106 | E-1 GND | 171 | IN | CS4, CARD SLOT ID | |
| | CARD CAGE ID, CC5 | I/O | 42 | 107 | E-3 GND | 172 | IN | CC6, CARD CAGE ID | |
| | CARD CAGE ID, CC7 | I/O | 43 | 108 | | 173 | N/C | | |
| | | N/C | 44 | 109 | | 174 | N/C | | |
| | | N/C | 45 | 110 | | 175 | N/C | | |
| | | N/C | 46 | 111 | | 176 | N/C | | |
| | | N/C | 47 | 112 | | 177 | N/C | | |
| | | N/C | 48 | 113 | | 178 | N/C | | |
| | | N/C | 49 | 114 | | 179 | N/C | | |
| | | N/C | 50 | 115 | | 180 | N/C | | |
| | | N/C | 51 | 116 | | 181 | N/C | | |
| | | N/C | 52 | 117 | | 182 | N/C | | |
| | | N/C | 53 | 118 | | 183 | N/C | | |
| | | N/C | 54 | 119 | | 184 | N/C | | |
| | | N/C | 55 | 120 | | 185 | N/C | | |
| | | N/C | 56 | 121 | | 186 | N/C | | |
| | | N/C | 57 | 122 | | 187 | N/C | | |
| | | N/C | 58 | 123 | | 188 | N/C | | |
| | | N/C | 59 | 124 | | 189 | N/C | | |
| | | N/C | 60 | 125 | | 190 | N/C | | |
| | | N/C | 61 | 126 | | 191 | N/C | | |
| | | N/C | 62 | 127 | | 192 | N/C | | |
| | | N/C | 63 | 128 | | 193 | N/C | | |
| | | N/C | 64 | 129 | | 194 | N/C | | |
| BUSSED | | N/C | 65 | 130 | E-3 GND | 195 | N/C | | BUSSED |

N/C = NO CONNECTION (NOT USED)

***Figure 5-39. Gateway Interface Input and Output Connections***

***A/B Bus Interface.*** Refer to **Figure 5-40**. Card operations are managed by an 80C186 micro-processor from instructions provided by operating software installed in two 128Kx8 EPROMs. Interface configuration and control data is stored in two 128Kx8 RAMs. The standard DENRO A/B-bus control circuitry, consisting of bus control logic and I/O latches, is installed for the A/B-bus interface.

Communication with the FIFO board in the Gateway Computer takes place over the parallel peripheral data link. The peripheral port consists of address and data I/O registers and is controlled by handshake signals via a handshake I/O register.

***FIFO Interface.*** To interface the peripheral port of the Gateway Interface with the I/O port of the Gateway Computer, a FIFO interface circuit is installed in an empty card slot in the Gateway Computer. Connection to the FIFO is made through the rear panel of the Gateway Computer. Refer to the Gateway Computer paragraph.

***RS 232 Interface.*** The RS-232 interface is not used.

## 5.13 ALARM UNIT

The Alarm unit monitors the state of the fuse alarm lines from each unit of the central rack card cages and from the position fuse panels. It also monitors the integrity of the A/B control data buses. It polls all other intelligent units in the central rack and identifies any malfunctioning unit if a failure is detected. Board operation is managed by an 80C186 microprocessor operating at 12 MHz.

Front panel indicators establish current operational status and an audible alarm warns of a central equipment fuse failure.

***Front Panel Controls and Indicators.*** The front panel is illustrated in **Figure 5-41**. **Table 5-31** defines the control and indicator functions.

***Input and Output Connections.*** All input and output connections are made at the card edge connector P1. The card cage backplane serves as the interface to this card. **Figure 5-42** illustrates the I/O connections at the card edge connector and identifies the function of the signal connected at each pin.

***Alarm Unit Strapping.*** Before installing the card in the card cage slot, ensure that the correct strapping is installed as defined in **Table 5-32**.

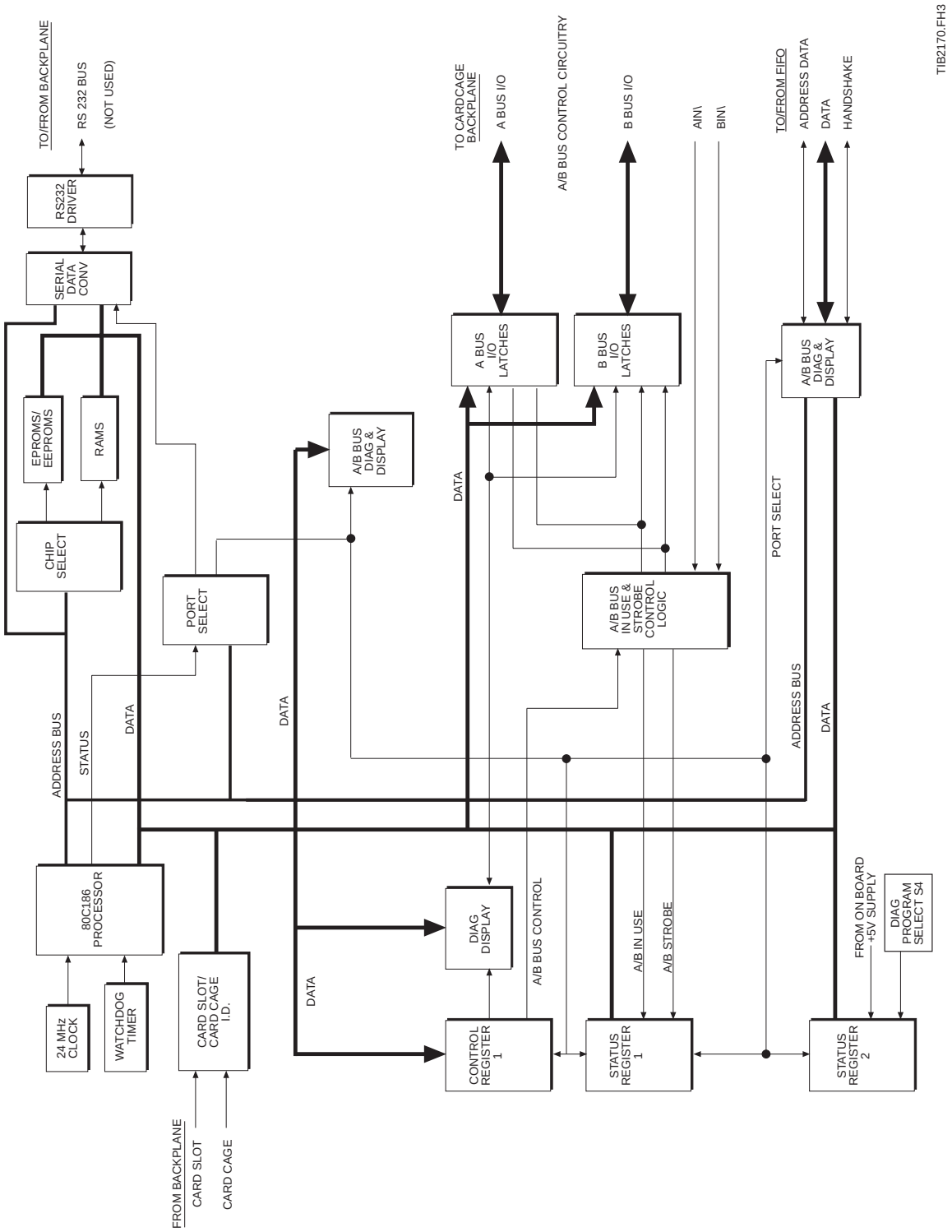


*Figure 5-40. Gateway Interface Functional Block Diagram*

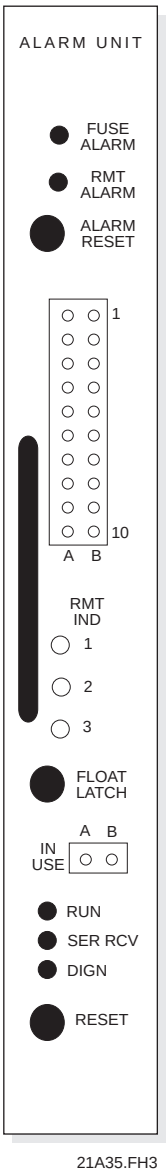


*Figure 5-41. Alarm Unit Front Panel*

### *Table 5-31. Alarm Unit Front Panel Controls and Indicators*

| NOMENCLATURE | FUNCTION |
|---|---|
| FUSE ALARM | Lights red if Alarm unit fuse blows |
| ALM RMT | Lights red if any card cage unit fuse blows, on-board speaker sounds audible alarm |
| DIGN | Lights yellow during boot-up and diagnostics routines, stays lighted if boot fails |
| RMT IND 1 | Not used |
| RMT IND 2, RMT IND 3 | Not used |
| A-BUS | 10 bus line status indicators* |
| B-BUS | 10 bus line status indicators* |
| IN USE A | A-bus active: steady on, bus error |
| IN USE B | B-bus active: steady on, bus error |
| RESET | Pushbutton: press to force reboot |
| ALARM RESET | Press to mute and reset remote alarm, indicator remains on |
| FLOAT/LATCH | Float Level. (normal position) front panel bus line LEDs stay on if float voltage level drops below 3.5V, indicating a “stuck” driver to that line |
| | Latch. Pulls all A/B-bus lines below 0.5V. All front panel bus line LEDs light (IN USE LEDs off) |
| | Float/Latch used for A/B Bus test and BUS LED check on front panel |
| RUN | Lights green when processor is operating normally |
| SER RCV | Not used (NOTE: Circuit not used; however, LED is in steady on condition [Green] by default.) |

* Lines 1–8 = Data, Line 9 = In Use, Line 10 = Strobe

### *Table 5-32. Alarm Unit Strapping*

| JUMPER | PURPOSE | STRAPPING |
|---|---|---|
| W1 | A-bus fault correction enabled | 2-3* |
| W4 | B-bus fault correction enabled | 2-3* |
| W5 | Watchdog enabled | 1-2* |
| W7 | Alarm Relay Reset: | |
| | Software control | 1-2* |
| | Hardware control | 2-3 |
| W14 | UART type (82510) | 2-3* |
| W15 | External input 5 | 1-2* |
| W16 | External input 6 | 1-2* |
| W17 | Watchdog time out (1200 ms) | 1-2* |
| S4** | Program select: Normal | 0 |
| W2, 3, 6, 8-13 | Not used | N/A |

** Switch setting

| TYPE | SIGNAL | | PIN NUMBERS | | | | | SIGNAL | TYPE |
|---|---|---|---|---|---|---|---|---|---|
| | +24 VA | | 1 | 66 | +24 VA | 131 | +24 VA | | |
| | +24 VB | | 2 | 67 | +24 VB | 132 | +24 VB | | |
| | N/C | | 3 | 68 | N/C | 133 | N/C | | |
| | FSALRM | | 4 | 69 | FSALRM | 134 | FSALRM | | |
| OPEN | N/C | | 5 | 70 | E-2 GND | 135 | N/C | | OPEN |
| “ | N/C | | 6 | 71 | | 136 | N/C | | “ |
| “ | N/C | | 7 | 72 | | 137 | N/C | | “ |
| “ | N/C | | 8 | 73 | | 138 | N/C | | “ |
| “ | N/C | | 9 | 74 | | 139 | N/C | | “ |
| “ | N/C | | 10 | 75 | | 140 | N/C | | “ |
| “ | N/C | | 11 | 76 | | 141 | N/C | | “ |
| “ | C RELAY STATUS, CPOSN | I/O | 12 | 77 | | 142 | N/C | | “ |
| “ | C RELAY N.C. | I/O | 13 | 78 | | 143 | N/C | | “ |
| “ | C RELAY N.O. | I/O | 14 | 79 | | 144 | N/C | | “ |
| “ | C RELAY M.A. | I/O | 15 | 80 | | 145 | N/C | | “ |
| “ | A RELAY STATUS, APOSN | I/O | 16 | 81 | | 146 | I/O | BPOSN, B RELAY STATUS | “ |
| “ | A RELAY N.O. | I/O | 17 | 82 | | 147 | I/O | B RELAY N.C. | “ |
| “ | A RELAY N.C. | I/O | 18 | 83 | | 148 | I/O | B RELAY N.O. | “ |
| “ | A RELAY M.A. | I/O | 19 | 84 | | 149 | N/C | B RELAY M.A. | “ |
| “ | RELAY RESET, RELAYRST | IN | 20 | 85 | | 150 | N/C | | “ |
| “ | N/C | | 21 | 86 | | 151 | N/C | | “ |
| “ | N/C | | 22 | 87 | | 152 | N/C | | “ |
| “ | N/C | | 23 | 88 | | 153 | N/C | | “ |
| “ | N/C | | 24 | 89 | E-2 GND | 154 | N/C | | “ |
| “ | N/C | | 25 | 90 | ISDNLIN1 | 155 | N/C | | “ |
| OPEN | N/C | | 26 | 91 | ISDNLIN2 | 156 | N/C | | OPEN |
| BUSSED | CONTROL BUS, AD0 | I/O | 27 | 92 | E-1 GND | 157 | I/O | BD0 CONTROL BUS B | BUSSED |
| | AD1 | I/O | 28 | 93 | | 158 | I/O | BD1 | |
| “ | AD2 | I/O | 29 | 94 | | 159 | I/O | BD2 | “ |
| | AD3 | I/O | 30 | 95 | | 160 | I/O | BD3 | |
| | AD4 | I/O | 31 | 96 | | 161 | I/O | BD4 | |
| “ | AD5 | I/O | 32 | 97 | | 162 | I/O | BD5 | “ |
| | AD6 | I/O | 33 | 98 | | 163 | I/O | BD6 | |
| | AD7 | I/O | 34 | 99 | | 164 | I/O | BD7 | |
| | -AST | I/O | 35 | 100 | | 165 | I/O | -BST | |
| | CONTROL BUS A, -AIN | I/O | 36 | 101 | | 166 | I/O | -BIN, CONTROL BUS B | |
| | CARD SLOT ID, CS0 | I/O | 37 | 102 | | 167 | IN | CS1, CARD SLOT ID | |
| | CARD SLOT ID, CS2 | I/O | 38 | 103 | | 168 | IN | CS3, CARD SLOT ID | |
| | CARD CAGE ID, CC0 | I/O | 39 | 104 | | 169 | IN | CC4, CARD CAGE ID | |
| | CARD CAGE ID, CC3 | I/O | 40 | 105 | | 170 | IN | CC2, CARD CAGE ID | |
| | (S1, W100) CARD CAGE ID, CC1 | I/O | 41 | 106 | E-1 GND | 171 | IN | CS4, CARD SLOT ID | |
| | CARD CAGE ID, CC5 | I/O | 42 | 107 | E-3 GND | 172 | IN | CC6, CARD CAGE ID | |
| | CARD CAGE ID, CC7 | I/O | 43 | 108 | | 173 | N/C | | |
| | N/C | | 44 | 109 | | 174 | N/C | | |
| | N/C | | 45 | 110 | | 175 | N/C | | |
| | N/C | | 46 | 111 | | 176 | N/C | | |
| | N/C | | 47 | 112 | | 177 | N/C | | |
| | N/C | | 48 | 113 | | 178 | N/C | | |
| | N/C | | 49 | 114 | | 179 | N/C | | |
| | N/C | | 50 | 115 | | 180 | N/C | | |
| | N/C | | 51 | 116 | | 181 | N/C | | |
| | N/C | | 52 | 117 | | 182 | N/C | | |
| | N/C | | 53 | 118 | | 183 | N/C | | |
| | N/C | | 54 | 119 | | 184 | N/C | | |
| | N/C | | 55 | 120 | | 185 | N/C | | |
| | N/C | | 56 | 121 | | 186 | N/C | | |
| | N/C | | 57 | 122 | | 187 | N/C | | |
| | N/C | | 58 | 123 | | 188 | N/C | | |
| | N/C | | 59 | 124 | | 189 | N/C | | |
| | N/C | | 60 | 125 | | 190 | N/C | | |
| | N/C | | 61 | 126 | | 191 | N/C | | |
| | N/C | | 62 | 127 | | 192 | N/C | | |
| | N/C | | 63 | 128 | | 193 | N/C | | |
| | N/C | | 64 | 129 | | 194 | N/C | | |
| BUSSED | N/C | | 65 | 130 | E-3 GND | 195 | N/C | | BUSSED |

N/C = NO CONNECTION (NOT USED)
N.O. = NORMALLY OPEN
N.C. = NORMALLY CLOSED
M.A. = MOVING ARM

***Figure 5-42. Alarm Unit Input and Output Connections***

***Fuse and A/B-Bus Monitoring.*** **Figure 5-43** is a block diagram of the Alarm Unit. The Alarm Unit monitors the states of the 10 data lines of the A/B-buses and the state of the fuse alarm lines from the card cage units and position fuse panels of the central rack. If a fuse blows in one of the central rack card cage cards or position fuse panels, the Alarm Unit fuse status line to status register 2 indicates a fuse alarm. The Alarm Unit notifies the SCT that a fuse alarm has occurred and generates a SYSTEM FAULT alarm that is sent to the System Alarm Panel.

## 5.14 HIGH-SPEED DATA LINK

The High-Speed Data Link interface is used as a repeater for the redundant control data bus. Data Links enhance the performance of larger systems in different ways.

Data Links can reduce bus loading caused by multiple processors sharing the same redundant A/B control data bus. To enhance system reliability, the data link cards segregate the bus into two or more isolated segments. The Data Link interface can also reduce the amount of messages on the A/B control data bus by performing rollup routines. If the Data Link interface receives messages of the same type, these messages can be processed into a single message (rollup), thus reducing unnecessary control data bus traffic.

Normally, a second control data bus loop is introduced when the micro-processor count exceeds 80.

***Front Panel Controls and Indicators.*** The front panel is illustrated in **Figure 5-44**. **Table 5-33** defines the control and indicator functions.

***Table 5-33. High-Speed Data Link Front Panel Controls and Indicators***

| NOMENCLATURE | FUNCTION |
|---|---|
| FUSE ALARM | Lights red if fuse blows |
| RUN | Lights green when CPU normal |
| A IN USE | A-bus active: steady on, bus error |
| B IN USE | B-bus active: steady on, bus error |
| SER RCV | (Serial Receive) Lights green when the asynchronous serial controller receives data. |
| SER XMIT | (Serial Transmit) Lights green when the asynchronous serial controller transmits data. |
| RESET (RST) | Recessed pushbutton: press to force reboot (requires tool to push) |

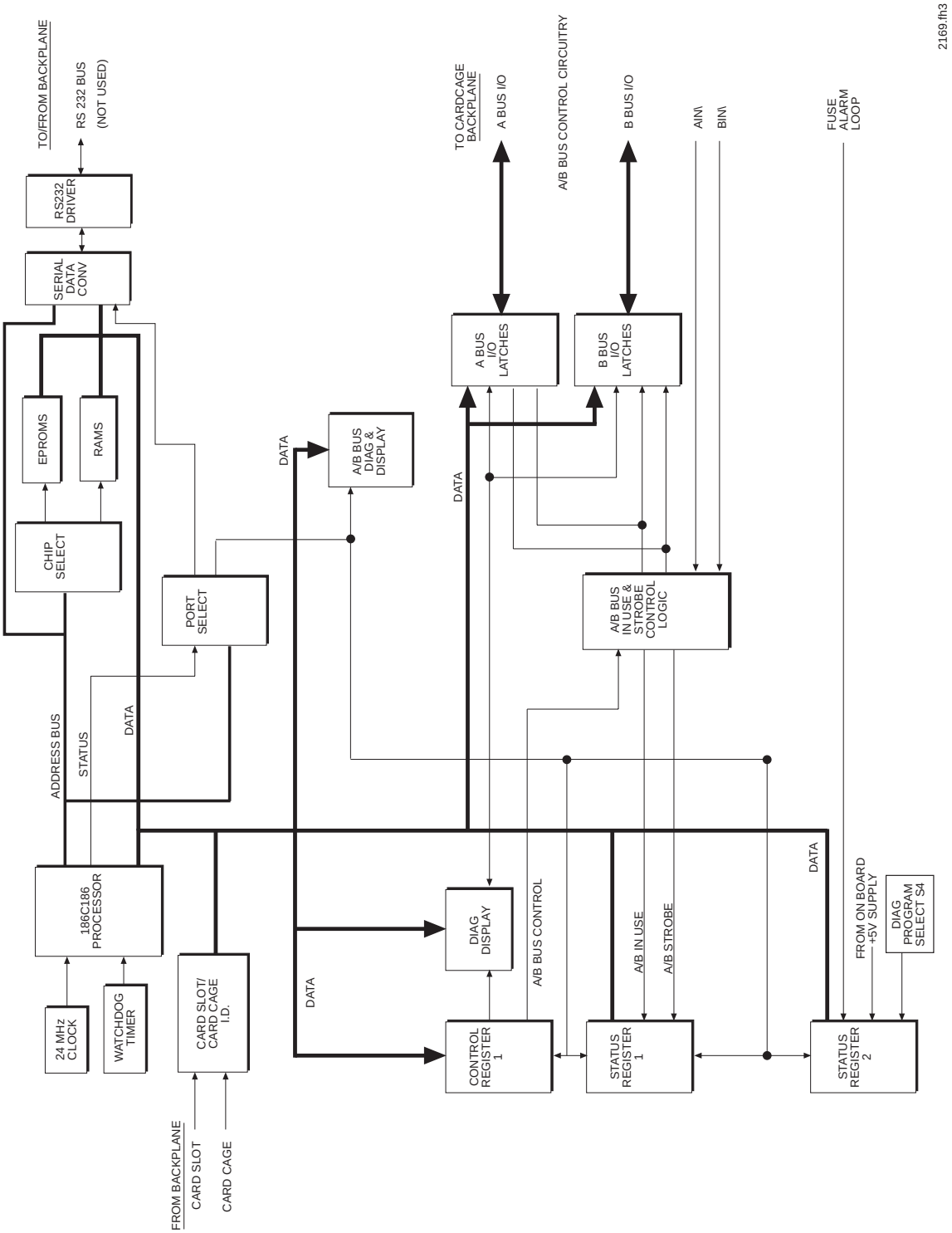


*Figure 5-43. Alarm Unit Functional Block Diagram*

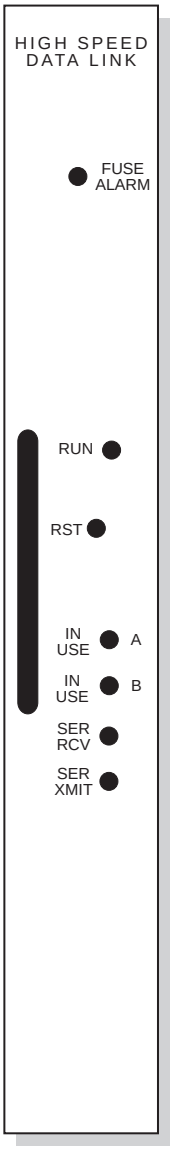


***Figure 5-44. High-Speed Data Link Front Panel***

***Input and Output Connections.*** All input and output connections are made at the card edge connector P1. The card cage backplane serves as the interface to this card. **Figure 5-45** illustrates the I/O connections at the card edge connector and identifies the function of the signal connected at each pin.

***Data Link Strapping.*** Before installing the card in the card cage slot, ensure that the correct strapping is installed as defined in **Table 5-34**.

***Table 5-34. High-Speed Data Link Unit Strapping***

| JUMPER | PURPOSE | STRAPPING |
|---|---|---|
| W4 | Slot ID: by Card cage<br>by Card slot 17 | 7-8*<br>3-4 |

* ETVS default settings

***Signal Path Conventions.*** A typical HS Data Link configuration is shown in **Figure 5-46**. To overcome a maximum control data bus load limit of approximately 80 processor cards, and to increase reliability by isolating sections of the control data bus from one another, the control data bus is broken into sections called data link groups. Each Data Link group has its own control data bus that loops through the card cages in the group. Data link group 1 is the hub of a star configuration from which the other data link groups radiate. The link between the hub and each of the other data link groups is provided by redundant high-speed data links.

Two pairs of HS Data Link cards support each link. One pair is located in the hub and the other in the data link group being linked. Each pair consists of a main and standby HS Data Link card. The pair located in the hub is interconnected by an RS-232 line. The HS Data Link cards in the hub, acting as main, continuously poll their standby partners across the RS-232 line. They also continuously poll their counterparts at the other end of the link. If either poll does not respond, the standby cards at both ends of the link become main. As soon as the fault is cleared, the standby cards currently acting as main, return to standby. Status messages appear at the SCT if a switchover occurs, identifying the failed card.

The installed location of the HS Data Link determines the card's physical identity. Cards installed in odd numbered slots assume physical main and cards installed in even numbered slots, adjacent and to the right of the main card, assume physical standby. Only the hub HS Data Link cards can control a switchover to logical main (the standby cards acting as main) and back. They control switchover at both ends of the link. The link pair that is to become logical main during a switchover must wait until the other pair switches to logical standby before it can switch to logical main, thus avoiding collisions. Switchover takes approximately 1 second until the lines are settled.

| TYPE | SIGNAL | | | PIN NUMBERS | | | | | SIGNAL | TYPE |
|---|---|---|---|---|---|---|---|---|---|---|
| | | +24 VA | 1 | 66 | +24 VA | 131 | +24 VA | | | |
| | | +24 VB | 2 | 67 | +24 VB | 132 | +24 VB | | | |
| | | N/C | 3 | 68 | N/C | 133 | N/C | | | |
| | | FSALRM | 4 | 69 | FSALRM | 134 | FSALRM | | | |
| OPEN | TX+ | OUT | 5 | 70 | E-2 GND | 135 | OUT | TX- | | OPEN |
| " | RX+ | IN | 6 | 71 | | 136 | IN | RX- | | " |
| " | | N/C | 7 | 72 | | 137 | N/C | | | " |
| " | | N/C | 8 | 73 | | 138 | N/C | | | " |
| " | | N/C | 9 | 74 | | 139 | N/C | | | " |
| " | | N/C | 10 | 75 | | 140 | N/C | | | " |
| " | | N/C | 11 | 76 | | 141 | N/C | | | " |
| " | | N/C | 12 | 77 | | 142 | N/C | | | " |
| " | | N/C | 13 | 78 | | 143 | N/C | | | " |
| " | | N/C | 14 | 79 | | 144 | N/C | | | " |
| " | | N/C | 15 | 80 | | 145 | N/C | | | " |
| " | | N/C | 16 | 81 | | 146 | N/C | | | " |
| " | | N/C | 17 | 82 | | 147 | N/C | | | " |
| " | | N/C | 18 | 83 | | 148 | N/C | | | " |
| " | | N/C | 19 | 84 | | 149 | N/C | | | " |
| " | | N/C | 20 | 85 | | 150 | N/C | | | " |
| " | RX RS232 | IN | 21 | 86 | | 151 | OUT | TX RS232 | | " |
| " | | N/C | 22 | 87 | | 152 | N/C | | | " |
| " | | N/C | 23 | 88 | | 153 | N/C | | | " |
| " | | N/C | 24 | 89 | E-2 GND | 154 | N/C | | | " |
| " | | N/C | 25 | 90 | N/C | 155 | N/C | | | " |
| OPEN | | N/C | 26 | 91 | N/C | 156 | N/C | | | OPEN |
| BUSSED | CONTROL BUS A, AD0 | I/O | 27 | 92 | E-1 GND | 157 | I/O | BD0 CONTROL BUS B | | BUSSED |
| | | | 28 | 93 | | 158 | | | | |
| " | | | 29 | 94 | | 159 | | | | " |
| | | | 30 | 95 | | 160 | | | | |
| | | | 31 | 96 | | 161 | | | | |
| " | | | 32 | 97 | | 162 | | | | " |
| | | | 33 | 98 | | 163 | | | | |
| | AD7 | I/O | 34 | 99 | | 164 | I/O | BD7 | | |
| | AST | I/O | 35 | 100 | | 165 | I/O | BST | | |
| | CONTROL BUS A, AIN | I/O | 36 | 101 | | 166 | I/O | BIN, CONTROL BUS B | | |
| | CS0 | IN | 37 | 102 | | 167 | IN | CS1 | | |
| | CS2 | IN | 38 | 103 | | 168 | IN | CS3 | | |
| | CC0 | IN | 39 | 104 | | 169 | N/C | | | |
| | CC3 | IN | 40 | 105 | | 170 | I/O | CC2 | | |
| | CC1 | IN | 41 | 106 | E-1 GND | 171 | N/C | | | |
| | | N/C | 42 | 107 | E-3 GND | 172 | N/C | | | |
| | | N/C | 43 | 108 | | 173 | N/C | | | |
| | | N/C | 44 | 109 | | 174 | N/C | | | |
| | | N/C | 45 | 110 | | 175 | N/C | | | |
| | | N/C | 46 | 111 | | 176 | N/C | | | |
| | | N/C | 47 | 112 | | 177 | N/C | | | |
| | | N/C | 48 | 113 | | 178 | N/C | | | |
| | | N/C | 49 | 114 | | 179 | N/C | | | |
| | | N/C | 50 | 115 | | 180 | N/C | | | |
| | | N/C | 51 | 116 | | 181 | N/C | | | |
| | | N/C | 52 | 117 | | 182 | N/C | | | |
| | | N/C | 53 | 118 | | 183 | N/C | | | |
| | | N/C | 54 | 119 | | 184 | N/C | | | |
| | | N/C | 55 | 120 | | 185 | N/C | | | |
| | | N/C | 56 | 121 | | 186 | N/C | | | |
| | | N/C | 57 | 122 | | 187 | N/C | | | |
| | | N/C | 58 | 123 | | 188 | N/C | | | |
| | | N/C | 59 | 124 | | 189 | N/C | | | |
| | | N/C | 60 | 125 | | 190 | N/C | | | |
| | | N/C | 61 | 126 | | 191 | N/C | | | |
| | | N/C | 62 | 127 | | 192 | N/C | | | |
| | | N/C | 63 | 128 | | 193 | N/C | | | |
| | | N/C | 64 | 129 | | 194 | N/C | | | |
| BUSSED | | N/C | 65 | 130 | E-3 GND | 195 | N/C | | | BUSSED |

N/C = NO CONNECTION (NOT USED)

***Figure 5-45. High-Speed Data Link Input and Output Connections***

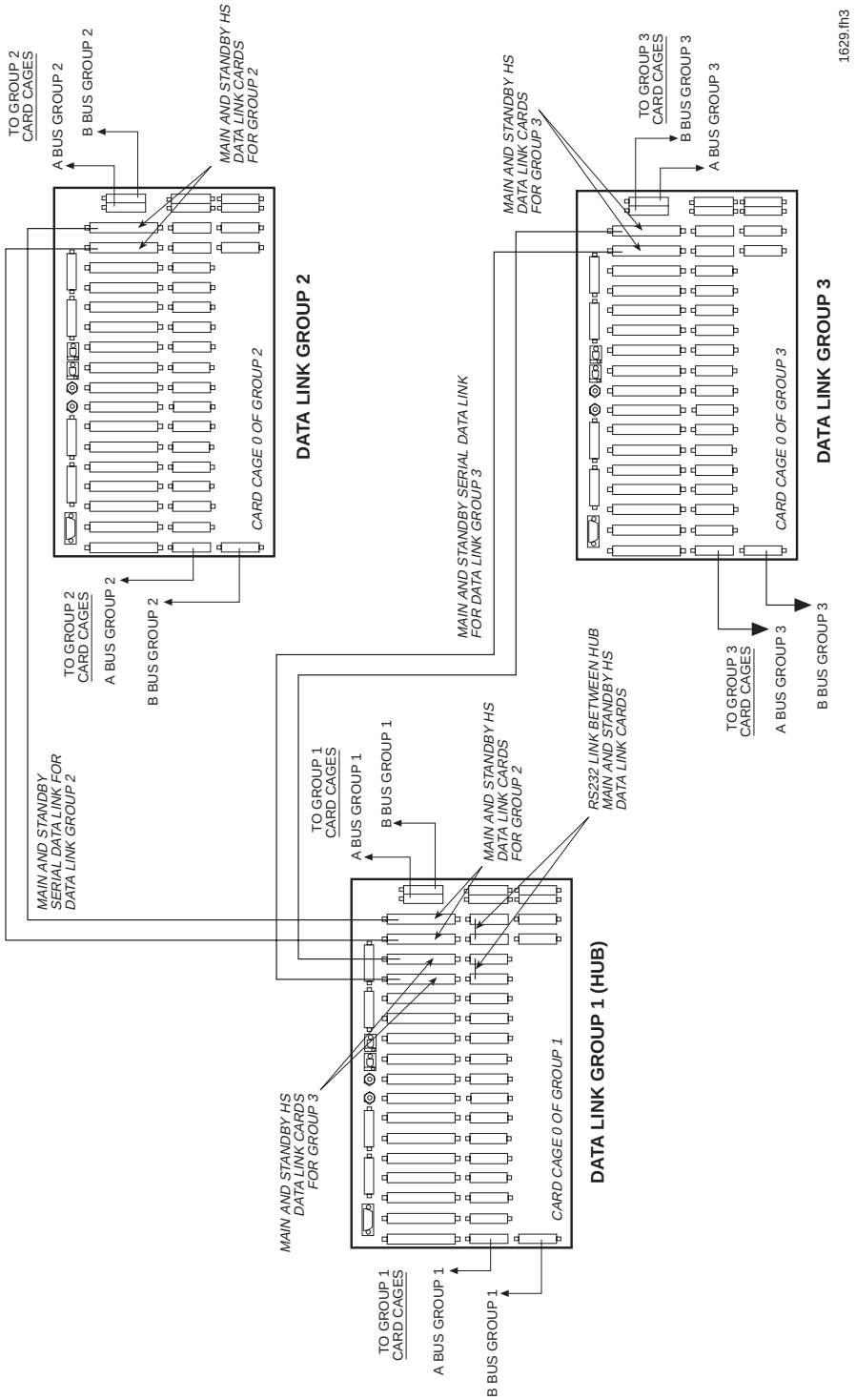


*Figure 5-46. Typical High-Speed Data Link Configuration*

Each link supports both the A and B buses of the redundant control data bus. The HS Data Links continuously attempt to use both busses.

Gateway Interfaces and Operator Processors are always located in the hub control data bus group (group 1 in **Figure 5-46**). This prevents a data link failure from severing control data bus communications with the CCS. It also ensures that operator control of the system is not affected by data link failures.

Refer to **Figure 5-47** for a functional block diagram of the Data Link. The heart of the Data Link is the Coded Data Transceiver (CDT). The CDT is a networking transceiver which uses transparent Manchester encoding/decoding through transformer-coupled links. The CDT derives the receive clock from the receive data stream, allowing synchronous communication without a separate clock link. The Data Link has a single full-duplex 2-Mbit-per-second synchronous serial connection that links the control data bus of one section of the system to the control data buses of the other sections of the system. The Data Link can functionally be divided into three parts: the parallel bus-to-serial link path, the serial-to-memory data entry, and the microprocessor-controlled memory-to-parallel-bus path.

This architecture provides efficiency gains that result in improved responsiveness while reducing the overall system traffic.

***Parallel Bus-to-Serial Link path.*** The data link does not interrupt the Z80 processor when in-use activity is detected on the parallel bus; instead, the data link transmits activity from both control data buses A and B directly through the serial link without intervention of the Z80. As control data bus activity is transparently sent over the serial link, any interpretation of this data is done by the data link at the receive end of the serial link.

***Serial Link-to-Memory Data Entry.*** The serial data from the Coded Data Transceiver (CDT) is clocked into an 8-bit shift register, and placed into registers. The hardware automatically steals cycles from the Z80 processor and places messages from both parallel A and B buses, received through the serial link, into the microprocessor's 8K memory. Messages are entered into the upper 2K of memory. A flag register generates a message flag for the CPU to determine whether new data has been entered from the serial link. Note that the microprocessor has been excluded, both from the task of receiving data from the parallel bus and from receiving data from the serial link. However, the microprocessor does the following:

- Checks the flag register for flag, and resets it.
- Addresses the decoders to select RAM or PROM and processes new messages.
- If the message is valid, checks the parallel bus activity; if active, waits and tries again. If not active, transmits message.

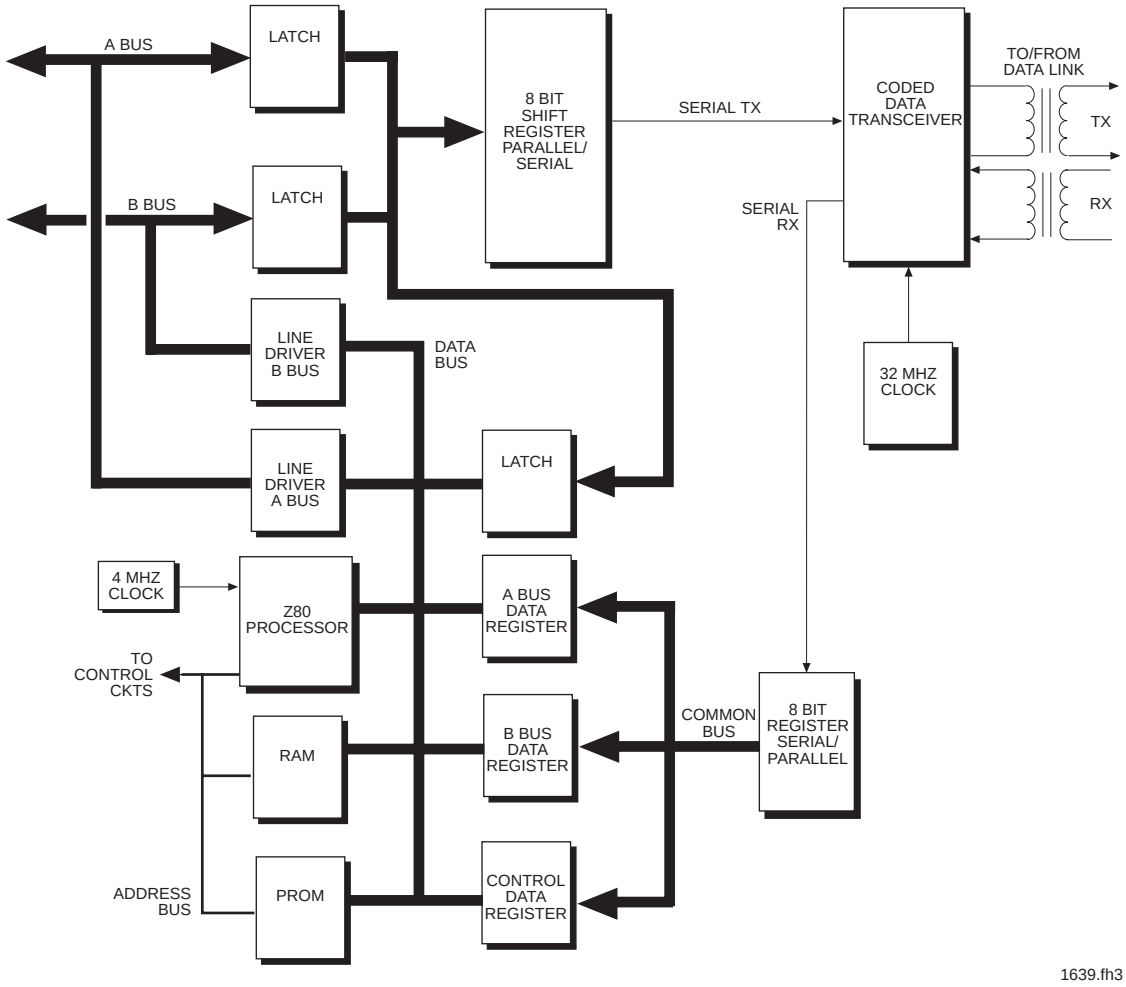


***Figure 5-47. High-Speed Data Link Functional Block Diagram***

***Memory-to-Parallel Bus Path.*** The serial link data is dropped into memory through a bus request/acknowledge cycle steal transfer. The transfer of this data from the memory to the parallel bus is under control of the Z80 processor and is accomplished with the RAM, PROM, etc. To write a message from memory to the control data bus, the processor does the following:

- Reads the status via the data bus to determine if the control data bus is active. If bus is not active, the processor goes to the next step.
- Writes message designated to activate control data bus IN USE lines, gaining control of the bus.
- Writes check bytes on both control data buses A and B. (Checks for valid messages.)
- Checks for collisions on A and B buses.
- Writes message onto the control data A and B buses.
- Turns off control of control data bus.

An example of the Manchester encoding/decoding 2-Mbit serial data stream is shown below:

| B BUS | A BUS | CONTROL DATA |
|---|---|---|
| 8 BIT | 8 BIT | 8 BIT |

## 5.15 REMOTE SERVER COMPUTERS

Each remote configuration terminal requires a remote server on the LAN through which to communicate with the central equipment. The remote server interfaces the LAN with a modem link between the remote server and the remote configuration terminal. The Remote Server is part of the remote SCT/MCT Kit A16A1. To function in the ETVS System, the remote server computers must be configured with the following hardware and software:

- Hard drive
- An Ethernet interface card for each LAN
- Modem
- Windows NT
- ETVS software (refer to **Table 2-1** Typical CSC Inventory)
- Floppy drive

This manual covers system cabling made at the rear panel. For information specific to the unit, refer to the appropriate vendor manuals for the Remote Servers. Troubleshooting and repair work will be done under the terms of the warranty. Corrective maintenance, using procedures in the TIB, is limited to unit replacement.

**Figure 5-48** illustrates the front and rear panel of the remote server computer.

## 5.16 SUPERVISOR AND MAINTENANCE CONFIGURATION TERMINALS

The Supervisor Configuration Terminal (SCT) provides the supervisor access to the configuration software to make system configuration changes or develop and send new maps. The Maintenance Configuration Terminal (MCT) provides the maintenance technician access to the system configuration for maintenance and troubleshooting purposes. The local SCT and MCT sit on the dual configuration and control subsystem LAN and are each powered by an uninterruptable power supply (UPS). **Figure 5-49** illustrates the SCT/MCT and the various parts available depending on site requirements.

A modem link to the LAN Remote Server enables remotely installed SCT and MCT terminals to communicate with the system. A (UPS) powers the remote terminals. An RS-232 UPS status line is connected to one of the remote SCTs.

The terminals consist of a CPU, monitor, keyboard, and mouse. The SCT and MCT run the same ETVS System configuration unit software. The difference in function is determined by the login level. Hardware installed in the terminals differs depending on terminal location, as defined later in this paragraph. Users login to perform SCT functions such as making configuration changes and monitoring status. They login to perform MCT functions such as diagnostic loop back. Menu items not available at the login level are grayed. Refer to the SCT User's Manual for operational details.

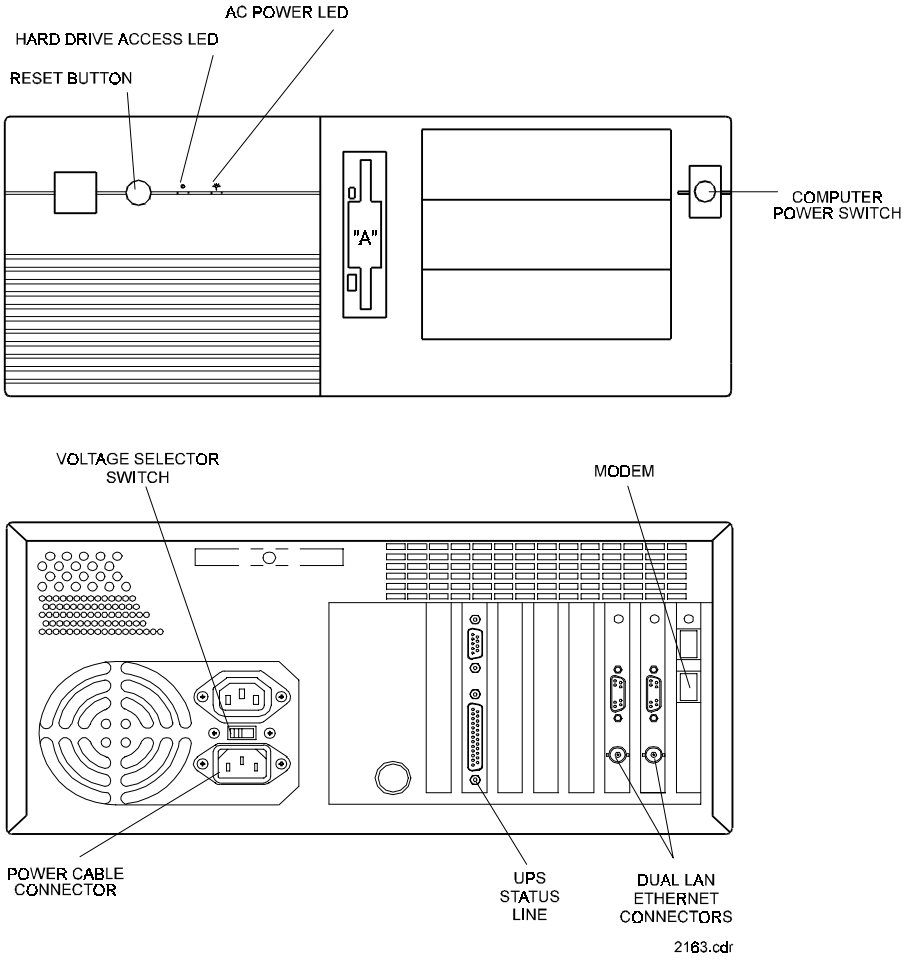


***Figure 5-48. Remote Server Computer***

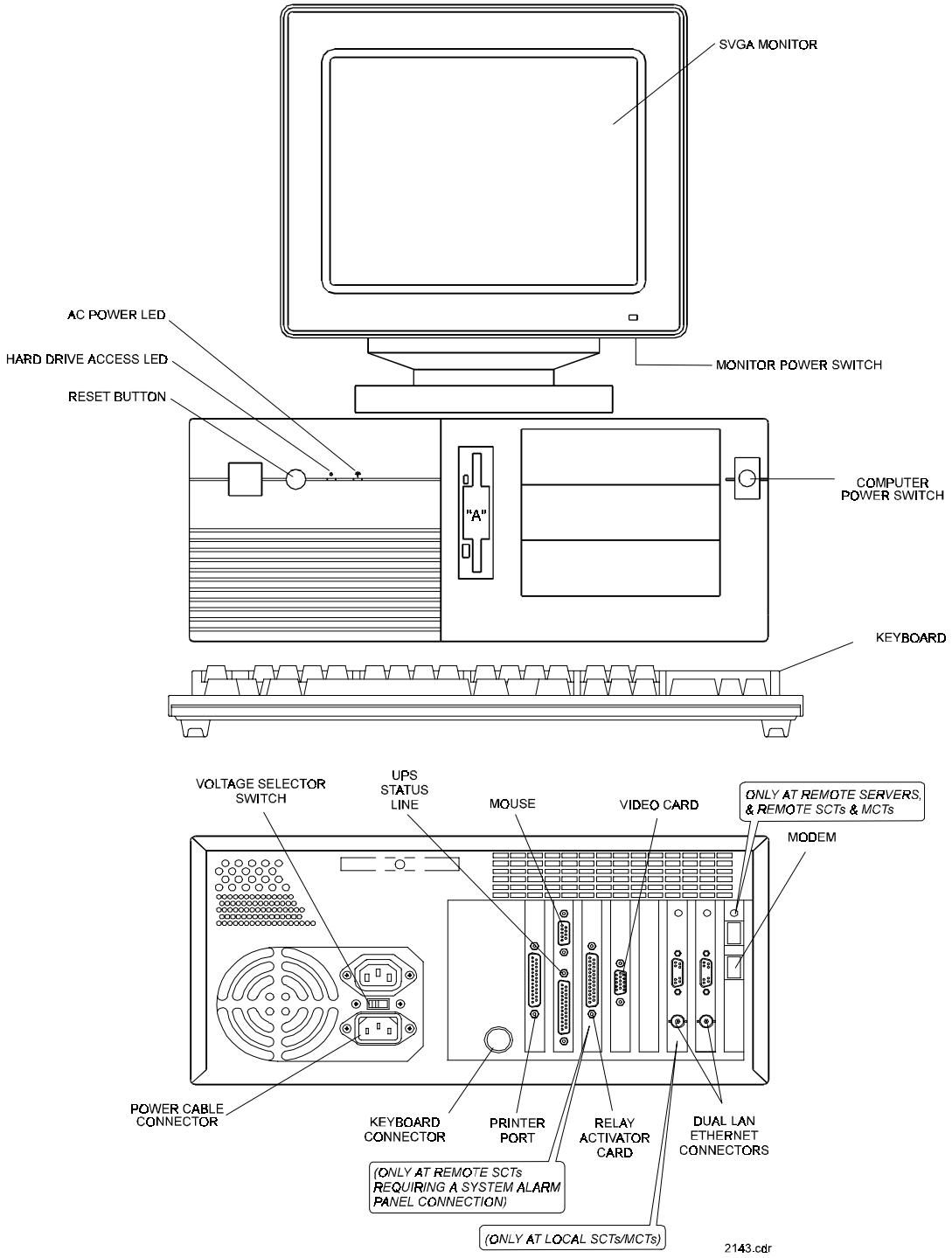


***Figure 5-49. Local and Remote SCTs and MCTs***

Logs, local and global maps, and any other data in the terminal hard drive data base can be printed to a printer located at each terminal position.

The terminals are configured as follows:

- 486DX/66 or faster CPU
- Super VGA monitor
- Hard drive
- Ethernet interface card for each LAN (local terminals)
- DOS 6.22
- Windows 3.11 for Work Groups (local terminals)
- Windows 95 (remote terminals)
- ETVS software (see **Table 2-1**, Typical CSC Inventory)
- Relay Actuator Card (at remote SCT terminals that collect remote power rack status, it is not an LRU)
- Modem (at remote terminals)
- Floppy drive
- Video Card (SVGA with 1M RAM)

This manual covers system cabling made at the rear panel. For information specific to the unit, refer to the appropriate vendor manuals for the SCT/MCT computers. Troubleshooting and repair work will be done under the terms of the warranty. Corrective maintenance, using procedures in the TIB, is limited to unit replacement.

***Ethernet Card.*** Ethernet cards are installed in all the configuration subsystem local computers. Because this is a non-LRU item, and site technicians do not have access to them, no strapping data is provided.

***Network Interface Status Reporter (NISR).*** The NISR is a standalone Windows program that runs on Windows for Work Groups 3.11 and has a 32-bit port that runs on Windows NT. NISR monitors the network connection status to both gateways; this status is passed to the SCT. The SCT gets network connection status from the status server in the NISR and reports any problem to the user.

## 5.17 GATEWAY COMPUTERS

The central rack houses two redundant Gateway Computers. Each, together with its associated Gateway Interface, interfaces the redundant central rack control data buses, A and B, with the redundant configuration and control subsystem LANs. To function in the ETVS, the computers must be configured with the following hardware and software:

- Hard drive
- An Ethernet interface card for each LAN
- First-in, first-out (FIFO) interface
- DOS 6.22
- Windows 3.11 for work groups
- ETVS software; gateway utilities (see **Table 2-1**, Typical CSC Inventory)
- Floppy drive

This manual provides operational, functional, and maintenance information specific to these units as they operate and function within the ETVS system. For more detailed information not contained in this manual, contact the ETVS manufacturer, DENRO.

Each computer slides into a rack adapter that houses up to four computers and is independently fused at the Position Fuse Panel. They are cabled to, and receive power via, the Operator Power Distribution Panel.

**Figure 5-50** illustrates the front panel of the Gateway Computer and **Figure 5-51** the rear panels of the two Gateway Computers installed in the rack adapter.

***FIFO Interface.*** To interface the peripheral port of the Gateway Interface card with the I/O port of the Gateway Computer, DENRO installs a FIFO interface card in an expansion slot in the Gateway Computer. The circuitry on the FIFO card is powered from the Gateway Computer power supply. Connection to the FIFO card is made at the rear of the expansion slot on the rear panel of the Gateway Computer. The FIFO exchanges data between the two devices at its own transmission speed, allowing data to pass between the Gateway FIFO card and the Gateway Computer data bus, although they operate at different data transmission rates.

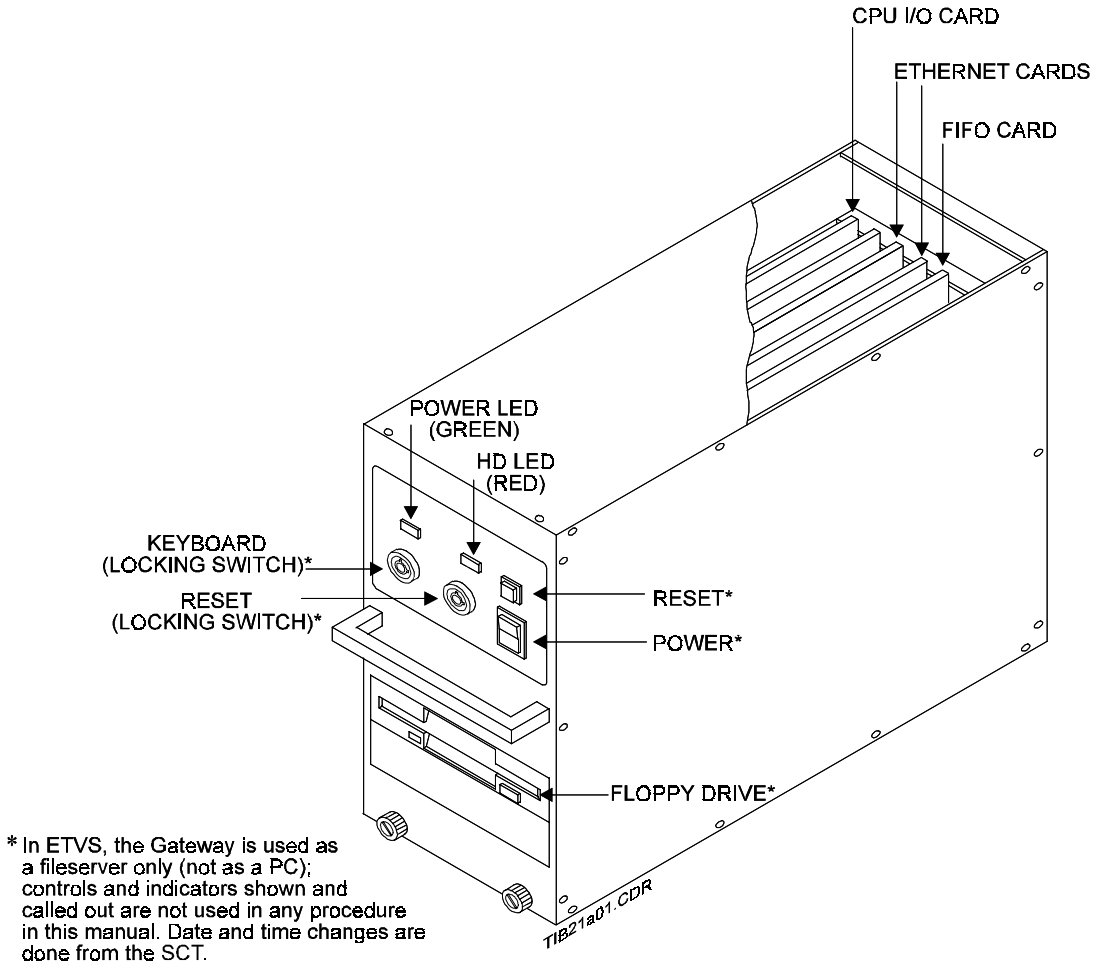


*Figure 5-50. Gateway Computer*

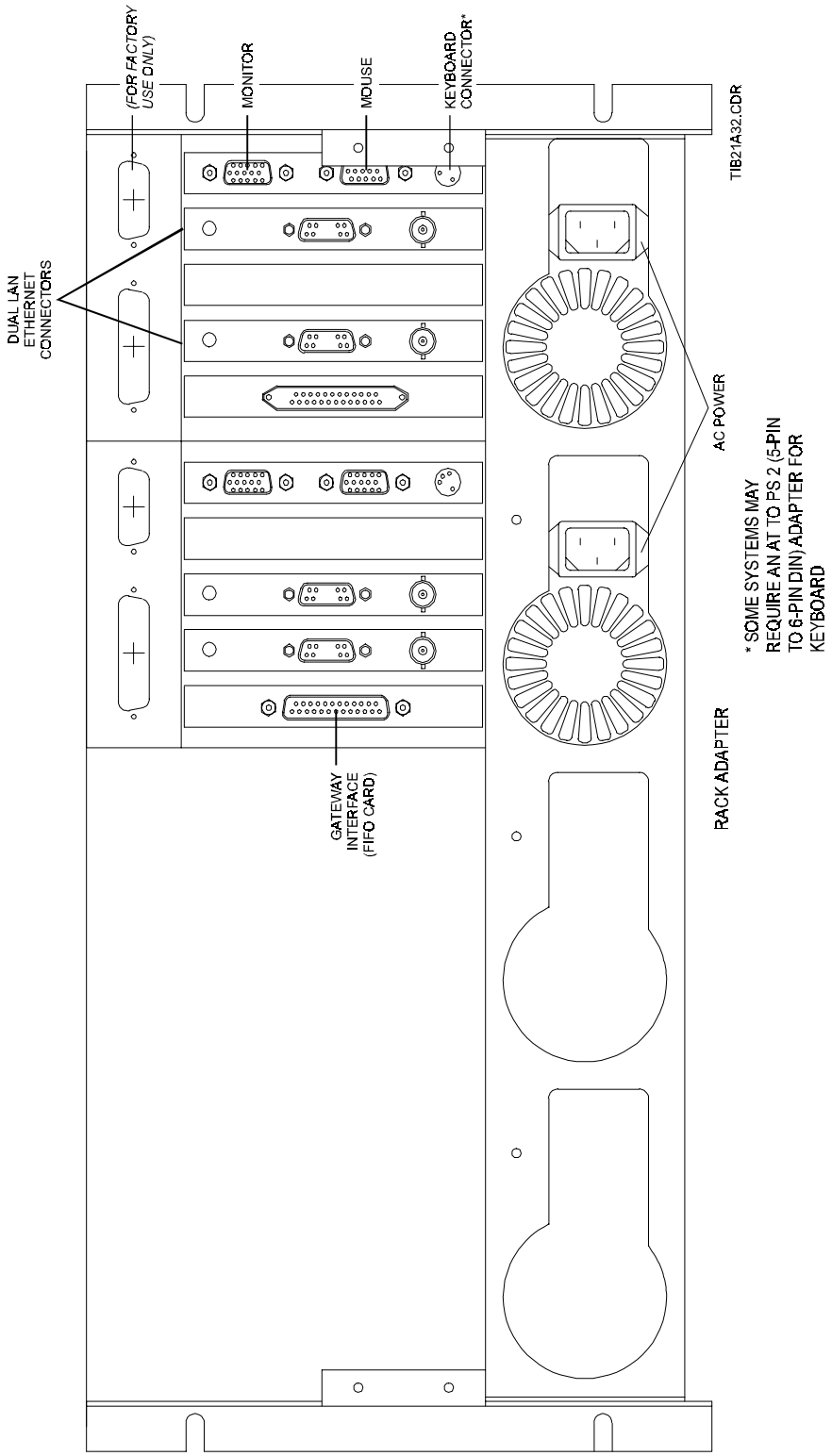


*Figure 5-51. Gateway Computer Rear View (Typical Configuration)*

Refer to **Figure 5-52** for a functional block diagram of the FIFO Interface. The FIFO is of the synchronous type in which data is clocked in through each I/O port by the device connected to the port, but, within the FIFO, it is clocked by the FIFO clock. Control signals from each device determine I/O port read and write functions relative to the needs of the respective device.

On the LAN side, the data buffer is a bi-directional transceiver with read/write functions controlled by the Gateway Computer. The two FIFO registers, one for each direction, contain dual-port memories with first-in, first-out algorithms that load and unload data from the memory on a first-in, first-out basis. The data communications line to/from the Gateway Interface card in the central rack is ported through a differential line driver and receiver. The differential drivers interface the eight single-ended +5V logic signals of the FIFO register with the differential (push-pull) signal format of the data line. The PC control logic sends control signals to the Data Buffer and FIFO registers that transfer data between the LAN and the FIFO registers. The PC Control Logic generates its control signals in response to addresses received across the LAN. The Gateway Control Logic sends control signals to the FIFO registers that transfer data between the FIFO registers and the Gateway Interface card. Refer to **Table 5-36** for board strapping.

***Ethernet Card.*** Each Gateway computer requires two Ethernet cards to communicate across the LANs to which it is connected. Because this is a non-LRU item, and site technicians do not have access to them, no strapping data is provided.

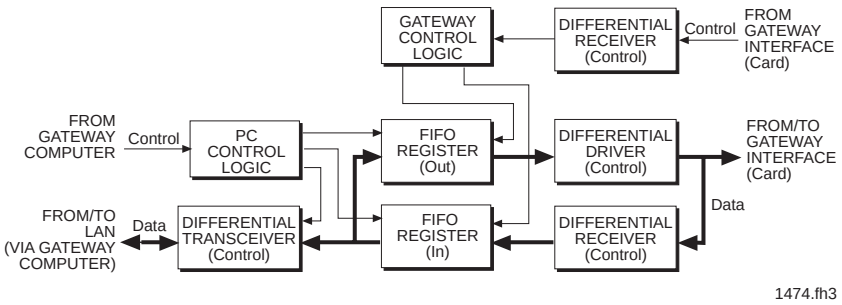


***Figure 5-52. FIFO Interface Block Diagram***

***Network Interface Status Reporter (NISR).*** The NISR is a standalone Windows program that runs on Windows for Work Groups 3.11 and monitors the status of the Ethernet interfaces (cards and network connectivity) and the gateway connectivity through the network interfaces installed on the SCT or remote server in the ETVS system.

## 5.18 POWER SUPPLIES

The central and remote racks are powered by modular power supplies designed for DENRO to meet the System requirements. There are two variations of this power supply used: version 1 utilizes a front panel VOLTS/AMPS switch and LCD; version 2 is similar in function but uses a LED BAR GRAPH instead of the VOLTS/AMPS switch and LCD that are utilized by version 1. A mains input source of 240 VAC (±15%) at 60 Hz (±6%) single phase is required. Circuitry in each module automatically adjusts to the source parameters, provided they are within the above specifications. No input strapping or transformer winding jumpers are used. If mains voltage drops below that specified above, the power supply modules shut down until mains voltage is restored to the operating range.

The power supply rack adapter houses up to three power supply modules: PS1, PS2 and PS3. Their outputs are tied together and applied to two parallel output connections at the rear of the chassis: +OUT and +OUT RTN. The +OUT terminals provide +27.5 VDC to the System and the +OUT RTN terminals are the return termination. Modules can be removed for servicing or replacement without disconnecting or removing any cables. An isolation diode on the DC output of each module allows a module to be replaced without turning off the system or disturbing the load bus during hot plug-in.

A minimum of two modules are installed for redundancy purposes, larger systems require three. Each module has a 125 Amp nominal output capacity. If the current load on each module exceeds a factory set 128 Amp limit, or a short circuit condition exists, the module shuts down until the current load returns to less than 128 Amps.

An overvoltage detection circuit causes the power supply module to shut down if the output voltage exceeds 30.0 volts. Input power must be re-cycled to restore power and reset the circuit. If the temperature inside a module exceeds 100°C, an internal thermostat shuts down the output until the temperature returns to the operating range of 0°C to 55°C.

Plus and minus sense leads from the power bus connect to TB2 on the rear panel of the power supply rack mount. The load sense circuit maintains a regulation of ±0.2% from 10% to full load. A single wire current sharing sense line interconnects all modules in the power supply rack mount at TB3. Load sharing maintains a shared load within 10% between modules with a maximum output voltage difference of 500 mV.

The power supplies provide overvoltage, shut down, overcurrent, overtemperature, AC undervoltage, and loss of mains power alarms to the System Alarm Panel.

**Figure 5-53** provides front and rear views of version 1. **Figure 5-54** shows the front panel of version 2; both versions are used in the ETVS systems. Front panel controls and indicators are listed in **Table 5-35**. Rear panel input and output connections for version 1 are made at TB1 - TB3 and are listed in **Table 5-36**.

The output from the power supply is fed to a Power/Ground Bus panel from which it is distributed to the Low Voltage Disconnect Panels, central rack card cages, and the Position Fuse Panels. Refer to **Figure 4-26** for an illustration of a typical power distribution scheme.

Power to the card cages is distributed from bus bars installed on either side of the rack. Two +24V and two return lines are connected to each card cage backplane from the bus bars.

Power to each position is distributed by the Position Fuse Panel and the Operator Power Distribution Panel. Each power line is fused at the Position Fuse Panel. An audible alarm is sounded at the Alarm unit front panel if one of the fuses should blow. Each position power line is connected to the position via the Operator Power Distribution Panel. The panel has connectors for 16 positions.

On version 1, the VOLTS or AMPS position of the front panel VOLTS/AMPS switch is selected, as desired, to check either the output voltage and load current of each power supply module of the same type in the chassis. The selected value is then read on the LCD display. On version 2, a front panel LED BAR GRAPH replaces the VOLTS/AMPS switch and LCD and is used to measure the output current. Each of the 10 segments (when lit) represents a 10% portion of the total load current.

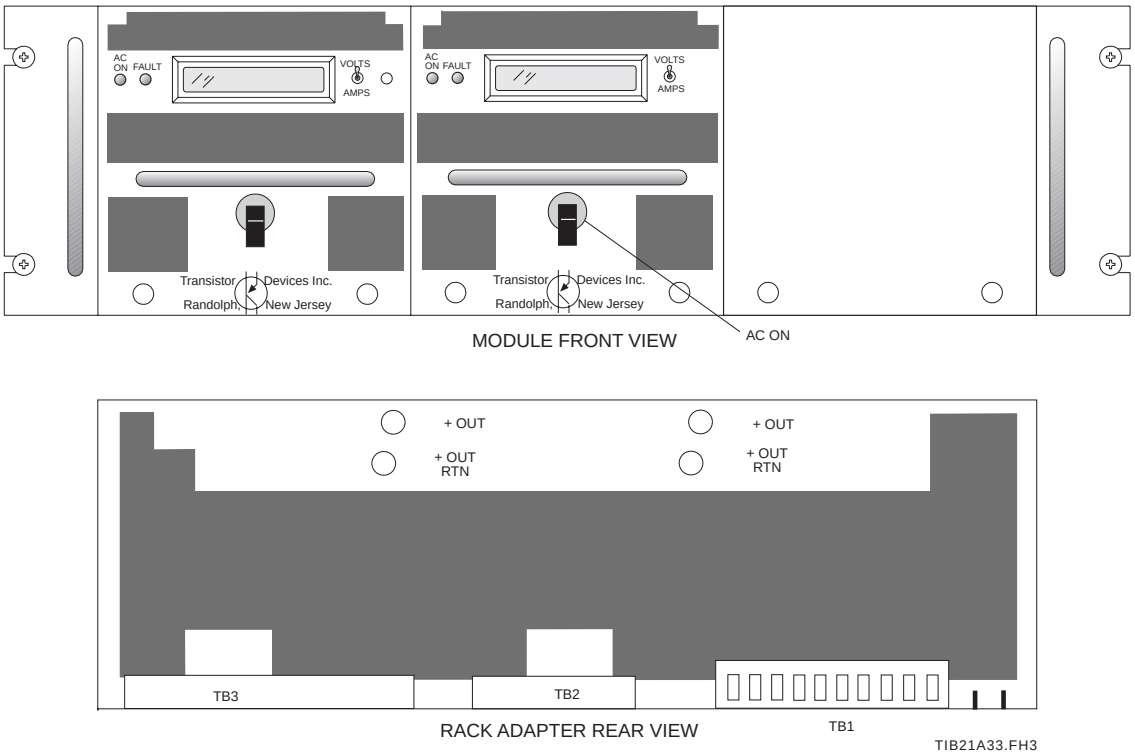


***Figure 5-53. Power Supply Module (Version 1) Front Panels and Rack Adapter Rear Panel***

***Table 5-35. Power Supply (Versions 1 and 2) Front Panel Controls and Indicators***

| NOMENCLATURE | FUNCTION (see NOTE) |
|---|---|
| AC ON* | Breaker: power ON/OFF and supply protection to module (shown OFF). |
| PUSH ON/POWER** | Breaker switch: same function AC ON on version 1 |
| AC ON (Versions 1 and 2) | Illuminates when breaker is in ON |
| FAULT (Version 1 and 2) | Illuminates if internal module diagnostics detect a failure. If lighted, module must be replaced. |
| VOLTS/AMPS* | Selects display mode |
| LCD* | Displays output voltage or current load, depending on mode selected. |
| LED Bar Graph ** | Measures output current; consists of 10 segments, with each segment representing a 10% portion of the load current. |

* Version 1 only
** Version 2 only
NOTE: Versions 1 and 2 are both factory adjusted to 27.5V. V ADJ potentiometer is not used.

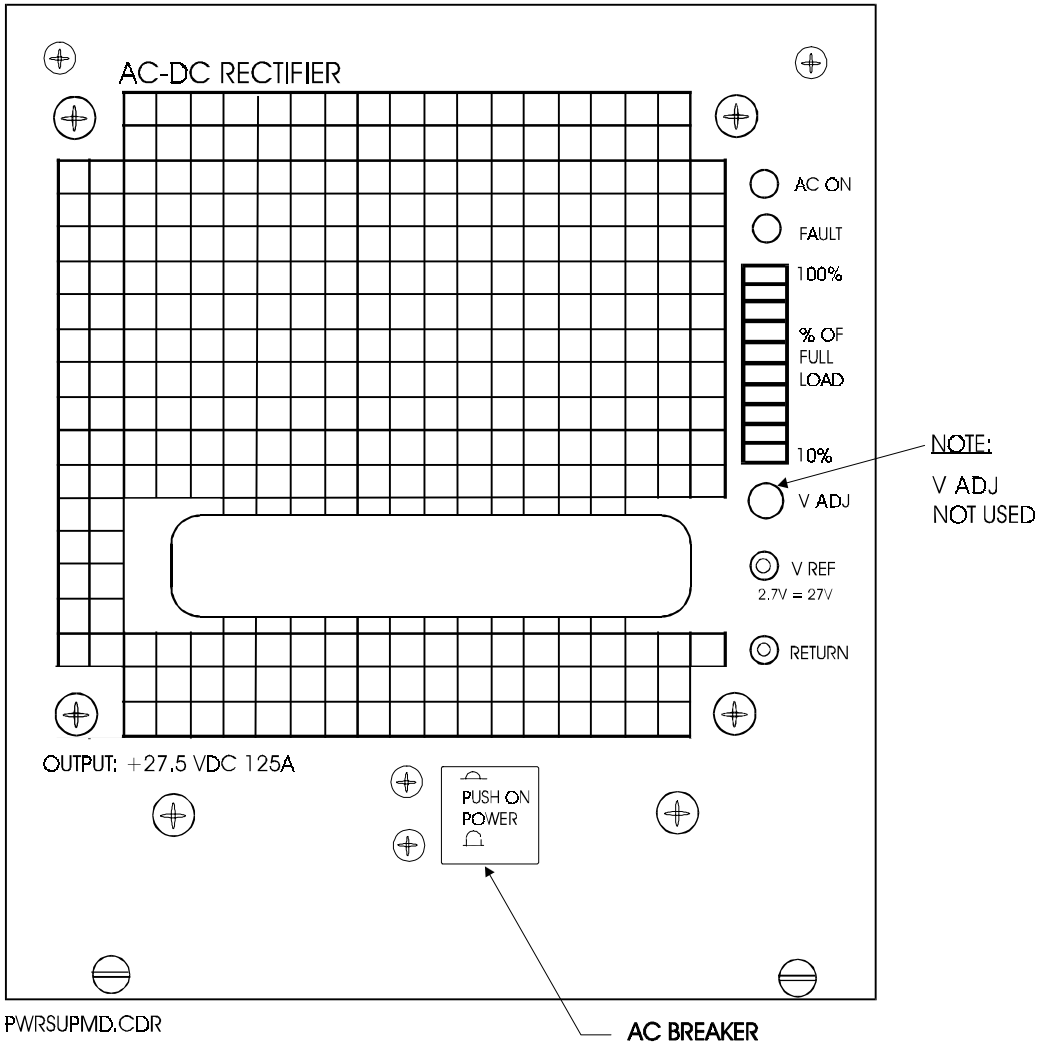


***Figure 5-54. Power Supply Module (Version 2), Front Panel***

***Table 5-36. Power Supply Rack Adapter Rear Panel Input and Output Connections***

| TB | FUNCTION | TB | FUNCTION |
|---|---|---|---|
| TB1 | | | |
| TB1-1 | AC High PS1 | TB1-6 | AC Low PS2 |
| TB1-2 | AC Low PS1 | TB1-7 | N/C |
| TB1-3 | Ground | TB1-8 | Ground |
| TB1-4 | Ground | TB1-9 | AC High PS3 |
| TB1-5 | AC High PS2 | TB1-10 | AC Low PS3 |
| TB2 | | | |
| TB2-1 | (+) Sense PS1 | TB2-4 | RTN Sense PS2 |
| TB2-2 | RTN Sense PS1 | TB2-5 | (+) Sense PS3 |
| TB2-3 | (+) Sense PS2 | TB2-6 | RTN Sense PS3 |

| TB | FUNCTION |
|---|---|
| TB3 | |
| TB3-1 | Sum Fault PS1 |
| TB3-2 | Sum Fault RTN PS1 |
| TB3-3 | Over Current Fault PS1 |
| TB3-4 | Sum Fault PS2 |
| TB3-5 | Sum Fault RTN PS2 |
| TB3-6 | Over Current Fault PS2 |
| TB3-7 | Sum Fault PS3 |
| TB3-8 | Sum Fault RTN PS3 |
| TB3-9 | Over Current Fault PS3 |
| TB3-10 | No Connection |
| TB3-11 | No Connection |
| TB3-12 | Sync From PS1, PS2, PS3 |
| TB3-13 | No Connection |
| TB3-14 | Current Share From PS1, PS2, PS3 |

| DC TERMINALS | FUNCTION |
|---|---|
| Parallel Outputs | |
| + OUT | High side of load output set to +27.5 VDC |
| + OUT RTN | Low (return side) of load output |

## 5.19 REMOTE RACK POWER SUPPLY

Both versions of the Power Supply Module can be used in the Full Height Remote Power Rack. See paragraph 5.18 for a functional description of these units. Version 2 of the power supply module, as noted earlier in paragraph 5.18, performs the same basic functions as does version 1, but its operational features differ somewhat (also as described in paragraph 5.18).

## 5.20 UNINTERRUPTIBLE POWER SUPPLIES

Each computer terminal and Remote Server is powered by an Uninterruptable Power Supply. Refer to the UPS vender documentation for operational details. **Figure 5-55** illustrates the UPS front and rear panels.

The block diagram of **Figure 4-28** shows the UPS alarm interface to the SCT/MCT (remote server not shown). In addition, paragraph 6.4.4.2.2 lists status messages and icons associated with the UPS/SCT alarm interface and UPS status. These messages and icons are displayed in the bottom line status window: UPS not connected (red icon); UPS on-line; UPS on battery; UPS unable to communicate (red icon); UPS on low battery (red icon); shutdown started (red icon); and system shutdown (red icon, SCT and UPS both down).

NOTE

Remote server alarm functions are described in paragraph 4.2.7.

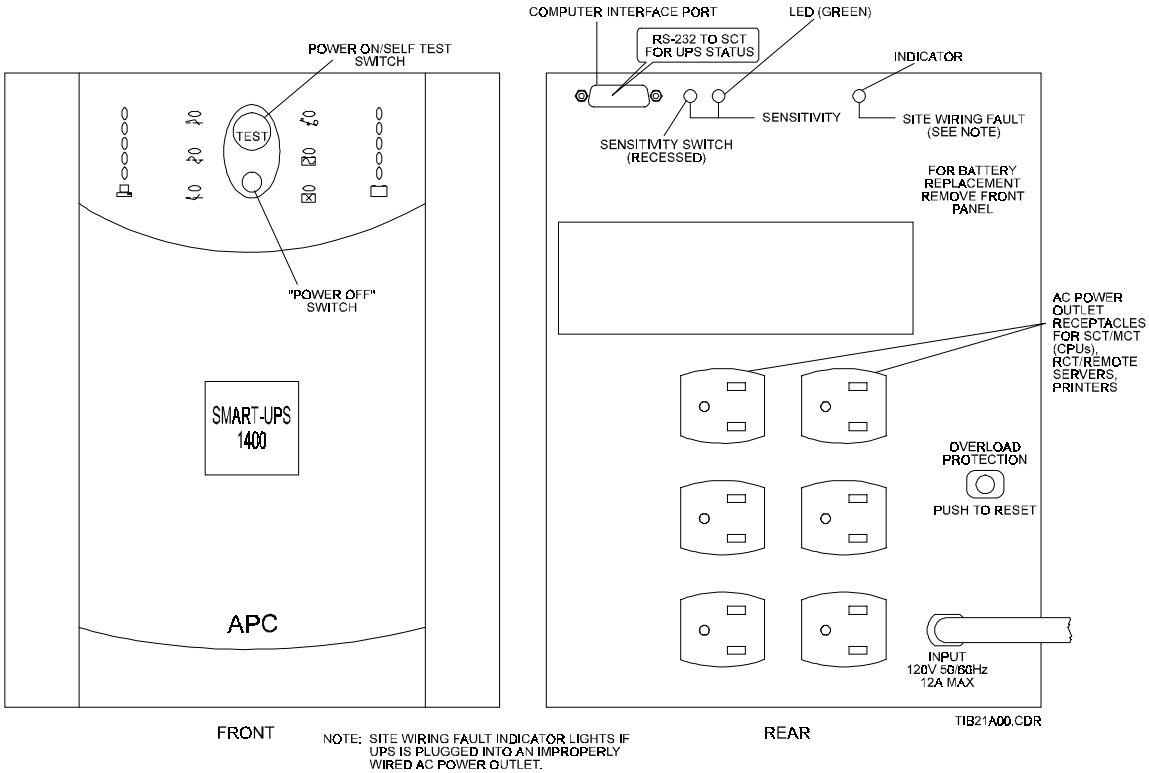


***Figure 5-55. Uninterruptable Power Supply Front and Rear Panels***

## 5.21 SYSTEM ALARM AND REMOTE ALARM PANELS

To provide a centralized location for all system alarm indications, both visual and audible, the central rack contains a System Alarm Panel. Alarms identified at this panel are also duplicated at Remote Alarm Panels, located at supervisor local positions. The System Alarm Panel responds to alarms generated by the SCT and processes alarm signals from the central rack power supplies and rack heat sensors.

The System Alarm Panel monitors the current operating state of the Low Voltage Disconnect Panels, indicating that the System is operating either from the power supplies or from battery backup power, and indicating the amount of backup time available from the batteries. The Remote Alarm Panels duplicate these indications.

In addition to providing alarm indication, the System Alarm Panel processes the door-lock release signals from the positions to up to 5 access doors. It also monitors the open/closed status of the site access doors. Door status is displayed at positions with keys configured to particular doors.

The Remote Power Rack also contains a System Alarm Panel. The panel in this rack monitors only the Remote Power Rack power supplies, remote fuse panel, and heat sensors. Alarms occurring at the Remote Power Rack System Alarm Panel are also displayed by the main System Alarm Panel via the configuration and control LAN and the central rack Parallel Control Processor. Door control and monitoring is not performed by the System Alarm Panels at the Remote Power Rack.

Input and output interfaces with the central rack System Alarm Panel include the central rack power supplies, Parallel Control Processor, rack heat sensors, Low Voltage Disconnect panel and Remote Alarm Panels. The remote rack System Alarm Panel interfaces with the remote rack power supplies, Low Voltage Disconnect, rack heat sensor, and the remote SCT.

The central rack overheat alarm loop supplies a ground state alarm signal to the System Alarm Panel. The rack overheat alarm condition also appears at the Remote Alarm Panels.

The System Alarm Panels, in both the central rack and the remote power racks, receive their power via the Position Fuse Panel and the Operator Power Distribution Panel.

The Remote Alarm Panels contain LEDs that duplicate the alarm indications of the System Alarm Panel. They also have a RESET/TEST button. There is no other circuitry in these units.

The RESET/TEST button illuminates red when an alarm occurs. When pressed and released, it silences the audible alarm but remains illuminated until the alarm condition is corrected. The audible alarm is triggered if a second fault occurs even if the first is silenced. Pressing the button momentarily tests the audible alarm.

***Front Panel Controls and Indicators.*** The front panels are illustrated in **Figures 5-56** and **5-57**. **Table 5-37** defines the control and indicator functions.

***Input and Output Connections.*** All input and output connections are made at the rear of the panel. **Figure 5-58** illustrates the I/O connections on the rear panel. **Table 5-38** lists the I/O connections.

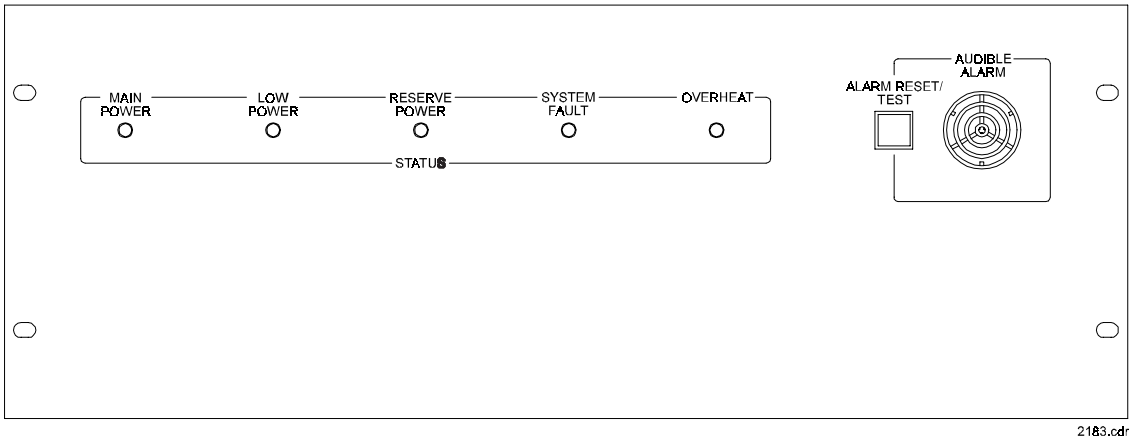


*Figure 5-56. System Alarm Panel Front Panel*

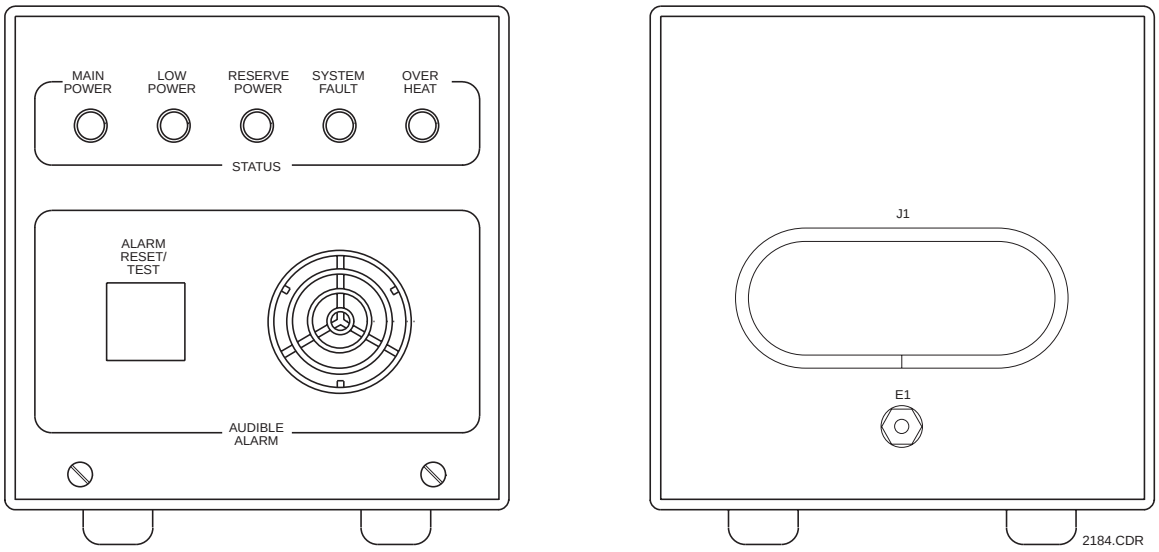


*Figure 5-57. Remote Alarm Panel Front and Rear Panels*

***Table 5-37. System Alarm Panel Controls and Indicators, Central and Remote Racks***

| NOMENCLATURE | FUNCTION |
|---|---|
| MAIN POWER | GREEN indicates that the system power source is facility AC power. |
| | RED indicates the System is operating on battery power due to AC power failure or insufficient power supply module redundancy. |
| LOW POWER | GREEN indicates there is at least 5 minutes of reserve power available. |
| | RED indicates there is 5 minutes or less of reserve power (will go back to GREEN after 15 minutes of continuous charge). |
| RESERVE POWER | GREEN indicates batteries are on-line and fully charged (reactivated after 2 hours of continuous charge). |
| | RED indicates the batteries are off-line. |
| | AMBER indicates the System Alarm Panel is currently using the 15-minute timer to set the LOW POWER LED to RED. |
| SYSTEM FAULT | GREEN indicates there are no system reported faults. |
| | RED indicates that the system is operating in a faulted mode. |
| OVERHEAT | GREEN indicates rack temperatures are normal |
| | RED, indicates a high temperature condition in one of the racks. |
| ALARM RESET/TEST | Illuminates RED to indicate system alarm condition or TEST button pressed. |

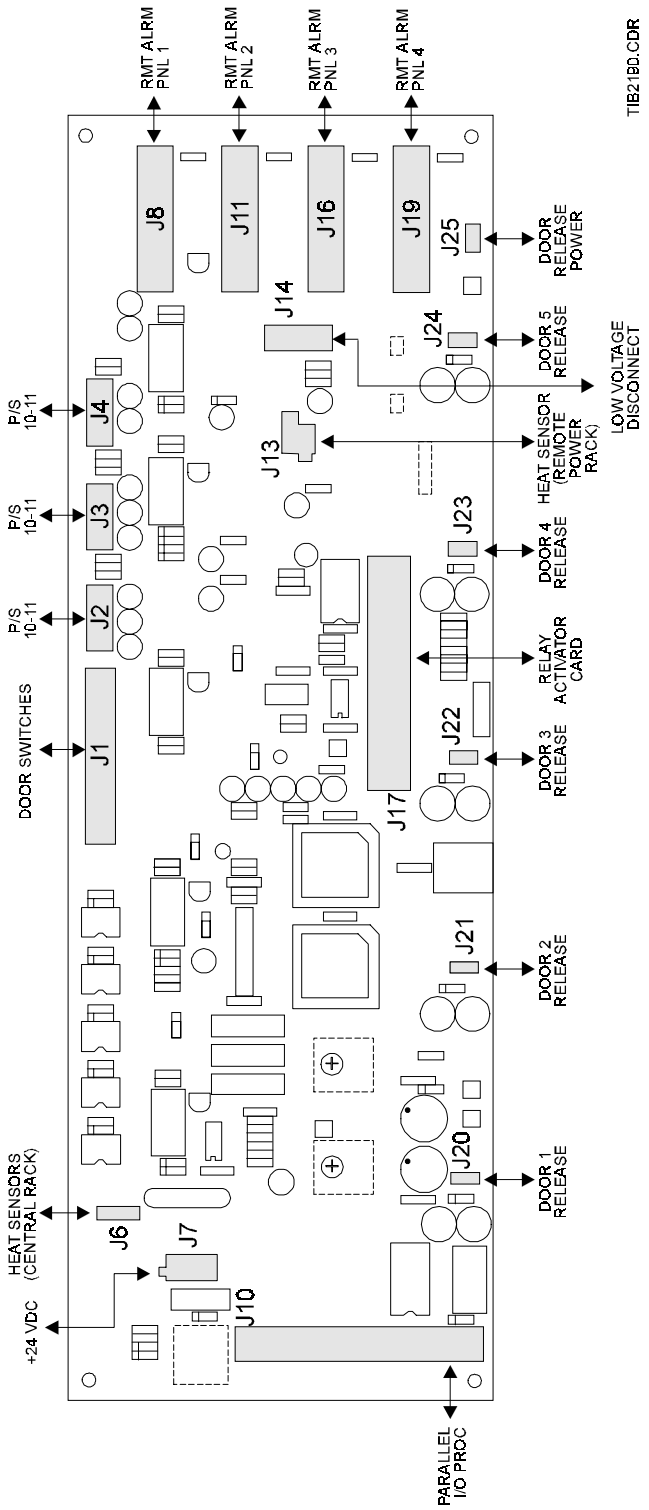


*Figure 5-58. System Alarm Panel Rear Panel*

### *Table 5-38. System Alarm Panel Input and Output Connections*

| Pin | Function |
|---|---|
| ***J1, From Door Switches:*** | |
| 1 | DC1, door 1 status |
| 2 | GND |
| 3 | DC2, door 2 status |
| 4 | GND |
| 5 | DC3, door 3 status |
| 6 | GND |
| 7 | DC4, door 4 status |
| 8 | GND |
| 9 | DC5, door 5 status |
| 10 | GND |
| ***J2, From Power Supplies PS1 – PS3:*** | |
| 1 | PS1, p/s status |
| 2 | PS2, p/s status. |
| 3 | PS3, p/s status |
| ***J3, From Supplies PS4 – PS6:*** | |
| 1 | PS4, p/s status |
| 2 | PS5, p/s status. |
| 3 | PS6, p/s status |
| ***J4, From Power Supplies PS7 – PS9:*** | |
| 1 | PS7, p/s status |
| 2 | PS8, p/s status. |
| 3 | PS9, p/s status |
| ***J6, From Rack Heat Sensors (local only; see J13):*** | |
| 1 | Overheat loop return |
| 2 | +24V to loop |
| ***J7, Power In: From Operator Power Distribution Panel*** | |
| 1 | +24 VDC |
| 2 | P GND |

### *Table 5-38. System Alarm Panel Input and Output Connections (Continued)*

| Pin | Function |
|---|---|
| ***J8, To/From Remote Alarm Panel #1:*** | |
| 1 | Out—+24 VDC power |
| 2 | Out—ALRM LIGHT to Reset/Test switch |
| 3 | In—RESET/TEST SW reset/test signal |
| 4 | Out—AUDIBLE ALARM to buzzers |
| 5 | Out—MAIN POWER RED to indicator |
| 6 | Out—MAIN POWER GREEN to indicator |
| 7 | Out—RESERVE POWER RED to indicator |
| 8 | Out—RESERVE POWER GREEN to indicator |
| 9 | Out—SYSTEM FAULT RED to indicator |
| 10 | Out—SYSTEM FAULT GREEN to indicator |
| 11 | Out—OVERHEAT RED to indicator |
| 12 | Out—OVERHEAT GREEN to indicator |
| 13 | Out—LOW POWER RED to indicator |
| 14 | LOW POWER GREEN to indicator |
| 15 | P GND |
| 16 | Not used |
| ***J10, To/From Parallel I/O Processor:*** | |
| 1 | Out—PS11 FAIL |
| 2 | Not used |
| 3 | Out—PS10 FAIL |
| 4 | Not used |
| 5 | Out—PS9 FAIL |
| 6 | In—SYSTEM FAULT |

***Table 5-38. System Alarm Panel Input and Output Connections (Continued)***

| Pin | Function |
|---|---|
| 7 | Out—DOOR CLOSED #5 |
| 8 | In—DR1, door 1 lock release |
| 9 | Out—DOOR CLOSED #4 |
| 10 | In—DR2, door 2 lock release |
| 11 | DOOR CLOSED #3 |
| 12 | In—DR3, door 3 lock release |
| 13 | Out—DOOR CLOSED #2 |
| 14 | In—DR4, door 4 lock release |
| 15 | Out—DOOR CLOSED #1 |
| 16 | In—DR5, door 5 lock release |
| 17 | Out—PS1 FAIL |
| 18 | In—DR ENA, door release enable |
| 19 | Out—PS2 FAIL |
| 20 | In—MAIN PWR FAULT |
| 21 | Out—PS3 FAIL |
| 22 | Out—BATT BAD, battery not holding charge |
| 23 | Out—PS4 FAIL |
| 24 | Out—LOW POWER ALRM |
| 25 | Out—PS5 FAIL |
| 26 | Out—RESERVE POWER ALRM |
| 27 | Out—PS6 FAIL |
| 28 | Out—OVERHEAT ALRM |
| 29 | Out—PS7 FAIL |
| 30 | Not used |
| 31 | Out -0 PS8 FAIL |
| 32 – 40 | Not used |
| ***J11, Remote Alarm Panel #2 (see J8):*** | |
| ***J13, From Remote Power Rack (remote only; see J6):*** | |
| 1 | Not used |
| 2 | OVERHEAT ALRM |

### *Table 5-38. System Alarm Panel Input and Output Connections (Continued)*

| Pin | Function |
|---|---|
| 3 | Not used |
| 4 | P GND |
| ***J14, To/From Low Voltage Disconnect Unit*** | |
| 1 | In—DISCON, LVD disconnect request |
| 2 | Out—Grant LVD disconnect (after 5 min) |
| 3 | In—Reserve power voltage level sense |
| ***J16, Remote Alarm Panel #3 (see J8)*** | |
| ***J17, To/From Relay Activator Card*** | |
| 1 | P GND |
| 2 | Not used |
| 3 | In—MP FAULT, main power fault |
| 4 | Not used |
| 5 | Not used |
| 6 | Not used |
| 7 | Not used chk schematic |
| 8 | Not used chk |
| 9 | Not used chk |
| 10 | Not used |
| 11 | Not used |
| 12 | Out—PS1 FAIL |
| 13 | Out—PS2 FAIL |
| 14 | Out—PS3 FAIL |
| 15 | Out—LP ALRM, low power alarm |
| 16 | Out—RPALM, reserve power alarm |
| 17 | Out—BATT BAD, not holding |
| 18 | Out—OVERHEAT ALRM |
| 19 | Not used |
| 20 | In—SF ALRM, system fault alarm |

### *Table 5-38. System Alarm Panel Input and Output Connections (Continued)*

| Pin | Function |
|---|---|
| 21 | P GND |
| 22 – 29 | Nor used |
| 30 – 37 | +24 VDC |
| ***J18, ISP Programming Port (factory use only)*** | |
| ***J19, Remote Alarm Panel #4 (see J8)*** | |
| ***J20, To Door #1 Release Coil*** | |
| 1 | Door #1 release |
| 2 | Door #1 release |
| ***J21, To Door #2 Release Coil*** | |
| 1 | Door #2 release |
| 2 | Door #2 release |
| ***J22, To Door #3 Release Coil*** | |
| 1 | Door #3 release |
| 2 | Door #3 release |
| ***J23, To Door #4 Release Coil*** | |
| 1 | Door #4 release |
| 2 | Door #4 release |
| ***J24, To Door #5 Release Coil*** | |
| 1 | Door #5 release |
| 2 | Door #5 release |
| ***J25, To Doors #1-5 Release Coils*** | |
| 1 | +24 VDC |
| 2 | +24 VDC |

***System Alarm Panel Strapping.*** **Table 5-39** lists the strapping.

***Table 5-39. System Alarm Panel Strapping***

| JUMPER | PURPOSE | STRAPPING |
|---|---|---|
| W1 | Full charge indication | |
| | With batteries (enabled) | 1–2 * |
| | Without batteries (disabled) | 2–3 |
| W2 | Timer control | |
| | Normal | 1–2* |
| | Diagnostic | 2–3 |
| W3 | System fault indicator | |
| | Enabled | 1–2* |
| | Disabled | 2–3 |
| W4 | Battery | |
| | With batteries | 1–2* |
| | Without batteries | 2–3 |
| W5 | Audible alarm enable | |
| | Enabled | 1–2* |
| | Disabled | 2–3 |
| W6 | PIO control | |
| | Enabled (local operation) | 1–2* |
| | Disabled (remote operation) | 2–3 |

* ETVS default setting

As shown in **Figure 5-59**, there are seven alarm circuits on the System Alarm Panel, including the alarm reset/test circuit, as follows:

- Alarm Reset/Test Switch
- Overheat Alarm
- System Fault Alarm
- Reserve Power Alarm
- Low-Power Alarm
- Main Power
- Power Supply Fail Alarm (no front panel indicator)

All the above circuits function similarly. An alarm condition, received from the power rack, Parallel Control Processor, Relay Activator Card, or Remote Alarm Panel causes the associated alarm circuit to produce an alarm signal. Depending on its source, this signal is routed to the on-board logic, the Parallel Control Processor, or the Relay Activator card. In some instances, it activates duplicate indicators at the Remote Alarm Panels. The alarm signal to the on-board logic produces an audible alarm at the front panel and initiates other responses, depending on the type of alarm.

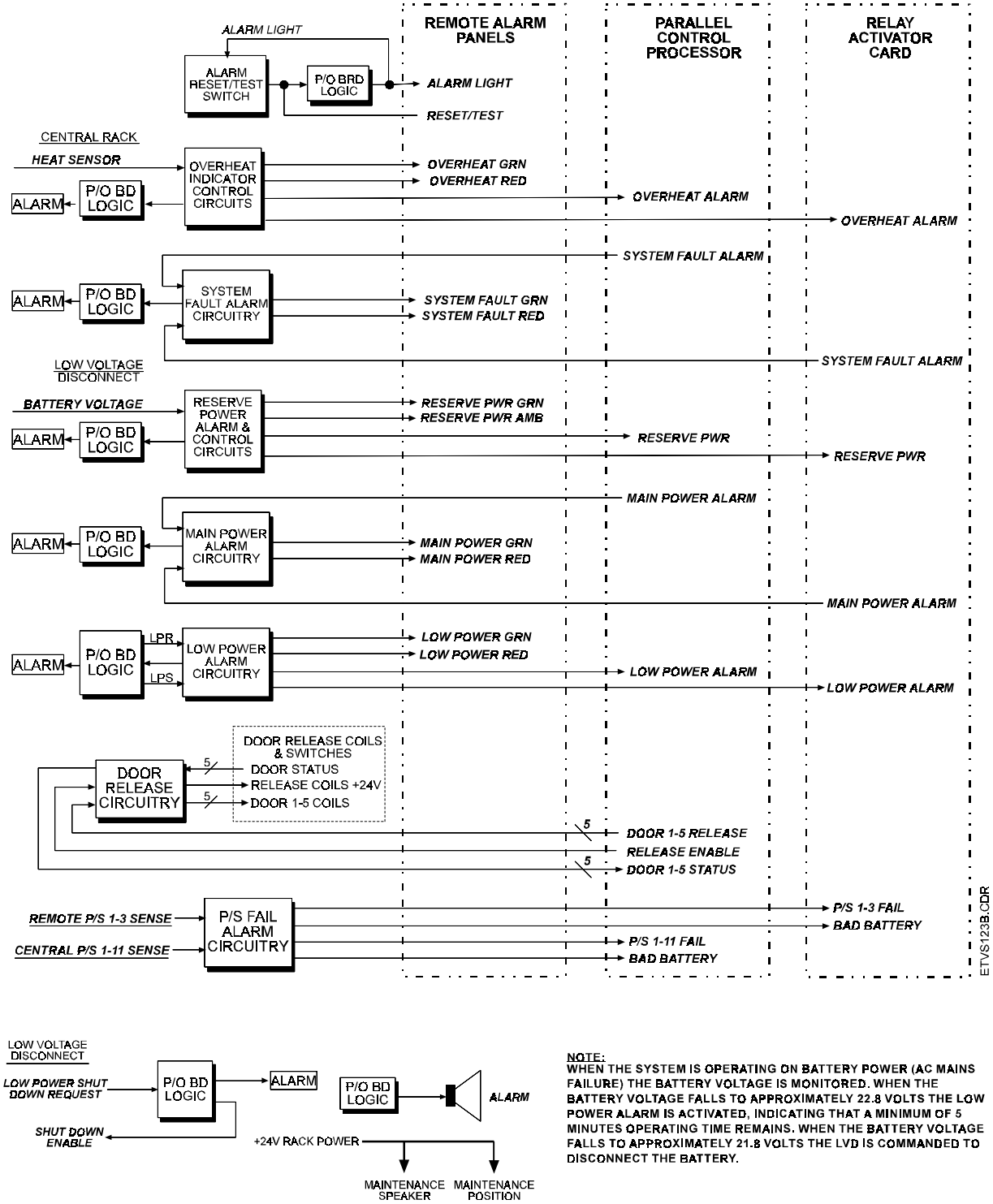


*Figure 5-59. System Alarm Panel Functional Block Diagram*

The door control circuit processes the door release command from the positions via the Parallel Control Processor. The control circuit provides +24 VDC and a return path to the selected door's release relay coil. The relay can be wired using normally open or normally closed contacts, depending on the site. Door-open status lines from each door identify that the selected door is open. This signal remains until the door is properly closed. (NOTE: As directed at the time of order, the ETVS shall provide momentary contact closures rated at a minimum of 1 ampere at 120 VAC or 2 amperes at 30 VDC to operate government-furnished door unlock solenoids) (per FAA-E-2894, 28 July 1995). The door release circuitry is not fused.

When a Main Power fault occurs, the System Alarm Panel (SAP) starts a 15-minute timer while monitoring system voltage. The front panel indicators are as follows: Main Power (RED), Low Power (GREEN), Reserve Power (GREEN), System Fault (RED), Overheat (GREEN). Once the system voltage drops below a threshold such that the remaining battery capacity may no longer support a minimum of 5 minutes, the SAP will set the Low Power LED to RED. When system voltage drops below the shutdown threshold, the SAP will control the Battery LVD to remove power from the system. The 15-minute timer is used when the time the system is powered by Batteries is interrupted by the return of AC power. In such a scenario, the Low Power indicator will turn RED after the system has been powered by batteries for 15 minutes. The state of the Reserve Power LED indicates which method (voltage sensing vs. 15 minute timer) will be used to determine the Low Power condition (i.e. Low Power [RED]). Any time the Main Power indicator goes from RED to GREEN, the Reserve Power indicator turns AMBER. Therefore, anytime the Main Power fault is RED and the Reserve Power LED is AMBER, the SAP is using the 15-minute timer to set the Low Power LED to RED.

NOTE

Regardless of the method that is used to determine the Low Power condition, system shut-down is always done as a result of the system’s voltage reaching the shut down threshold as detected by the SAP.

When individual power supplies fail, the System Alarm Panel System Fault indicates the failure and the SCT determines whether the system still has redundancy in power supplies. The SCT also displays that the power supply has failed. If there is redundancy, the System continues to operate off the remaining power supplies. If there is no redundancy available, the System Alarm Panel Main Power indicates that main power has failed. Additional status information can be obtained from the power supply module front panel LEDs; for example, the FAULT indicator on a central rack power supply module may be lighted.

## 5.22 POSITION FUSE PANEL

The positions local to the central rack receive power from the central rack power supplies via the Position Fuse Panel. The Remote Power Rack also has a Position Fuse Panel through which remote positions receive their power. The fuses are accessible from the front of the panel.

As shown in **Figure 5-60**, the panel has a 16 line capacity. It also has a blown fuse detection circuit that is tied into the system alarm network. If a fuse blows, the indicator immediately adjacent to and to the right of the blown fuse extinguishes and an audible alarm sounds at the System Alarm Panel. The indicator for the affected fuse continues to show a blown fuse until the bad fuse is replaced. Each Position requires a 1 to 5-Amp fuse depending on installation. Power is input to the panel from the power/ground bus panel. See paragraph 4.2.6 for a more detailed explanation of the power/ground distribution panel functions. The fused outputs are connected by a single cable to the operator Power Distribution panel and distributed to the positions. A label strip above the fuses can be used to identify the position served by each fuse.

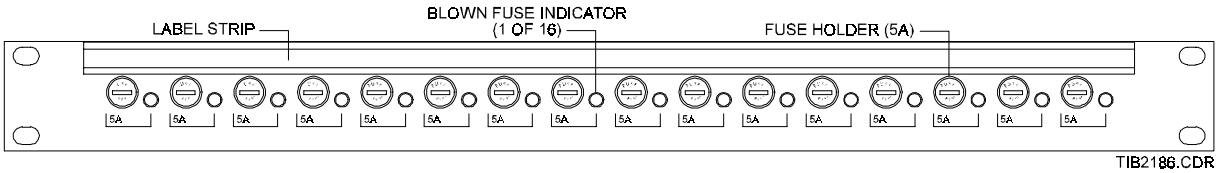


***Figure 5-60. Position Fuse Panel***

## 5.23 LOW-VOLTAGE DISCONNECT

Both the central rack and the remote power racks have a Low Voltage Disconnect Panel. The central rack also has two additional LVD panels that function as delayed voltage connect panels. In this paragraph these panels are called the delayed connect panels. Depending upon the ETVS basic system configuration (BS1–BS4), the delayed connect and LVD panels will handle loads of either 200 Amps (BS-1 and BS-2) or 800 Amps (BS-3 and BS-4).

Only the power distribution system in the central rack uses delayed connect panels. The two delayed connect panels installed connect the central rack equipment load to the Central Rack Power Supplies and the battery supply

If power output is lost from the Central Rack Power Supplies, the load still remains connected to the batteries through the LVD panel and the delayed connect panels for a specified time interval determined by the System Alarm Panel. Refer to the System Alarm Panel paragraph.

The LVD panel is a voltage sensitive switch that is connected in the charge path between the power supply and the batteries. Under normal operating conditions, the batteries are charged by the power supply through the switch. If for any reason the power supplies fail to produce an output, the System Alarm Panel holds the switch closed and the batteries assume the load through the LVD switch.

If the batteries are unable to support the load (drop below 21.8V), the System Alarm Panel causes the LVD panel to disconnect the system load from the batteries. Because the Central Rack Power Supplies and the batteries are now no longer supplying power, the delayed connect panels also open the supply path to the load.

When the Central Rack Power Supplies again supply power to the system, the Low-Voltage Disconnect Panel reconnects to the power supply output. Thus the batteries start to charge through the LVD panel. Once the battery voltage level reaches 26V, the delayed connect panels connect the system load to the power supply/battery output. The power supplies and batteries provide a common output to the load.

At the Remote Power Supply rack, the LVD simply disconnects the load from the batteries. The System Alarm Panel monitors the power supply and battery outputs and controls when the LVD panel disconnects the batteries from the load and the power supplies. The power supplies always remain connected to the load and when their output is restored, the batteries are reconnected.

For normal operation, the NORMAL/MANUAL OVERRIDE switch must be in the NORMAL position. When testing or aligning the voltage sense circuit, place this switch in MANUAL OVERRIDE to prevent the batteries from being disconnected. The MANUAL OVERRIDE position is used primarily when adjusting (aligning) the Low Voltage Load Disconnect (LVLD) circuitry without disconnecting the load from the battery; that is, by maintaining the load connected to the battery even if the battery voltage drops below the preset level. **Table 5-40** lists the controls and indicators for both the front and rear panels, which are illustrated in **Figure 5-61**.

The unit is aligned at the factory and requires no adjustment in the field. A performance check is provided in Section 6.

***Table 5-40. Low Voltage Disconnect Front Panel Controls and Indicators***

| NOMENCLATURE | FUNCTION |
|---|---|
| Fuse (1A) | 1A fuse (F1) to protect voltage sense circuit |
| LOAD CONNECTED | Illuminates GREEN when the batteries are connected to the System. Extinguished when sense circuit causes batteries to be disconnected. Will also go out when fuse F1 is disconnected from front panel. |
| NORMAL | NORMAL selected for normal operation. Battery disconnect is automatic. |
| MANUAL OVERRIDE | MANUAL OVERRIDE position selection is used for test and alignment. Enables the adjustment of the low-voltage sensing circuit without disconnecting load from battery. The load is maintained connected to battery even if the battery voltage drops below the preset level. |
| J1 & J2 (Labeled NEGATIVE TEST and POSITIVE TEST) | Test and alignment jacks (not used) |

**NOTE**

The LVD delayed start (load connect) panels operate in parallel and provide redundancy. The electrical functions of the front panel control (SW1), fuse (F1), and indicator lamp are the same as those described above for the LVD (load connect) panel. The fuse protects the sensing circuit and the MANUAL OVERRIDE position of the switch, when used, isolates the sensing circuit for performance checks and alignment. The LOAD CONNECTED lamp will be lit GREEN regardless of the power source connection (Power Supply Modules or battery reserve power). The low voltage delayed start (LOAD CONNECT) units also reconnect the load to the power supplies and batteries. Once the voltage rises to the required level set for the sensing circuit (usually about 26 VDC), the load connect units connect the system load to the power supply/battery outputs; the power supplies and batteries provide a common output to the load.

***Input and output connections*** are listed in **Table 5-41**. Refer to the rear panel illustration in **Figure 5-58**.

A simplified block diagram of the connect and disconnect panels in the central rack power distribution system is shown in **Figure 5-62**. At the remote power rack, there is a single Low Voltage Disconnect Panel that, in conjunction with the System Alarm Panel, controls load switching. Refer to Section 4.2.6 which provides a more detailed discussion of the Central Rack Power Distribution System, including the Central Rack power supplies, battery pairs, power/ground bus, power distribution panel, and the load/battery disconnect LVD panels. This discussion is supported by the more detailed power distribution subsystem block diagrams of **Figures 4-26** (Central Rack) and **4-27** (Remote Rack).

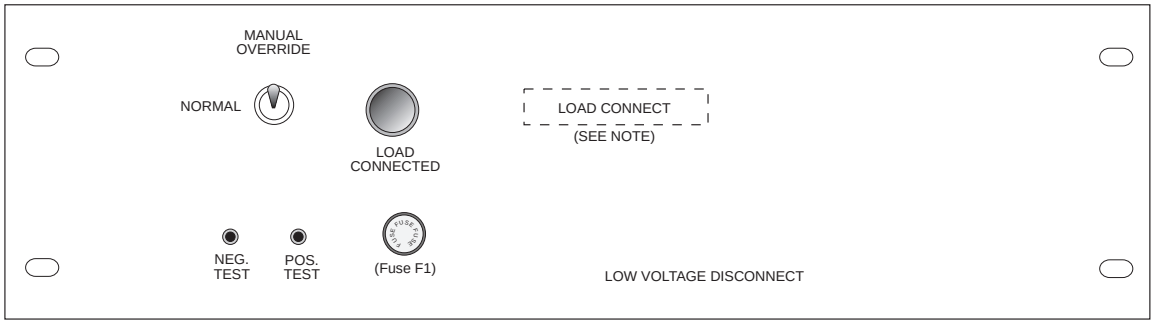


FRONT PANEL

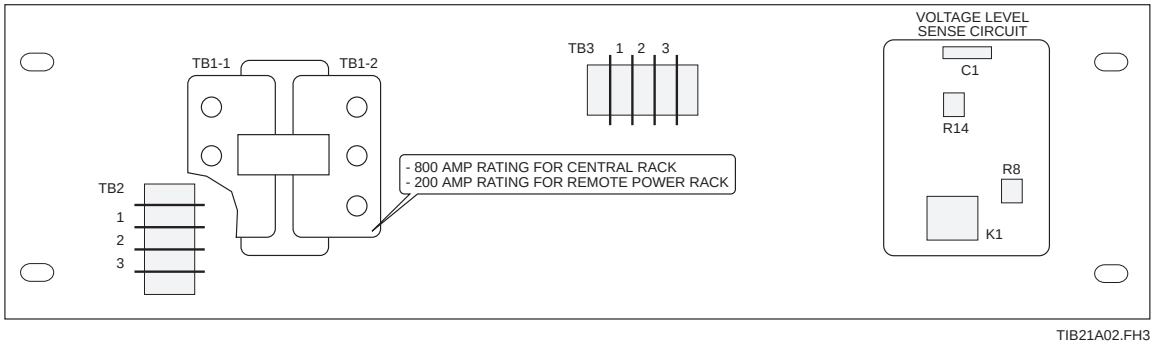


REAR PANEL

***Figure 5-61. Low Voltage Disconnect Front and Rear Panels***

NOTE

The low-voltage disconnect panel used for the battery disconnect function is labeled as shown in **Figure 5-61**, front panel. The "Delayed Connect" LVD (see **Figure 5-62**) also has a label, "Delayed Connect," affixed on its front panel in the same location as shown in **Figure 5-61**.

***Table 5-41. Low Voltage Disconnect Input and Output Connections***

| NOMENCLATURE | FUNCTION |
|---|---|
| TB1-1B | +24 VDC connection from power supply |
| TB1-2A | +24V connection to batteries |
| TB2 | Battery voltage sense |
| 1 | + sense voltage |
| 2 | Not used |
| 3 | - sense voltage |
| TB 3 | Alarm relay contacts (not used) |
| 1 | Normally open |
| 2 | Common |
| 3 | Not used |

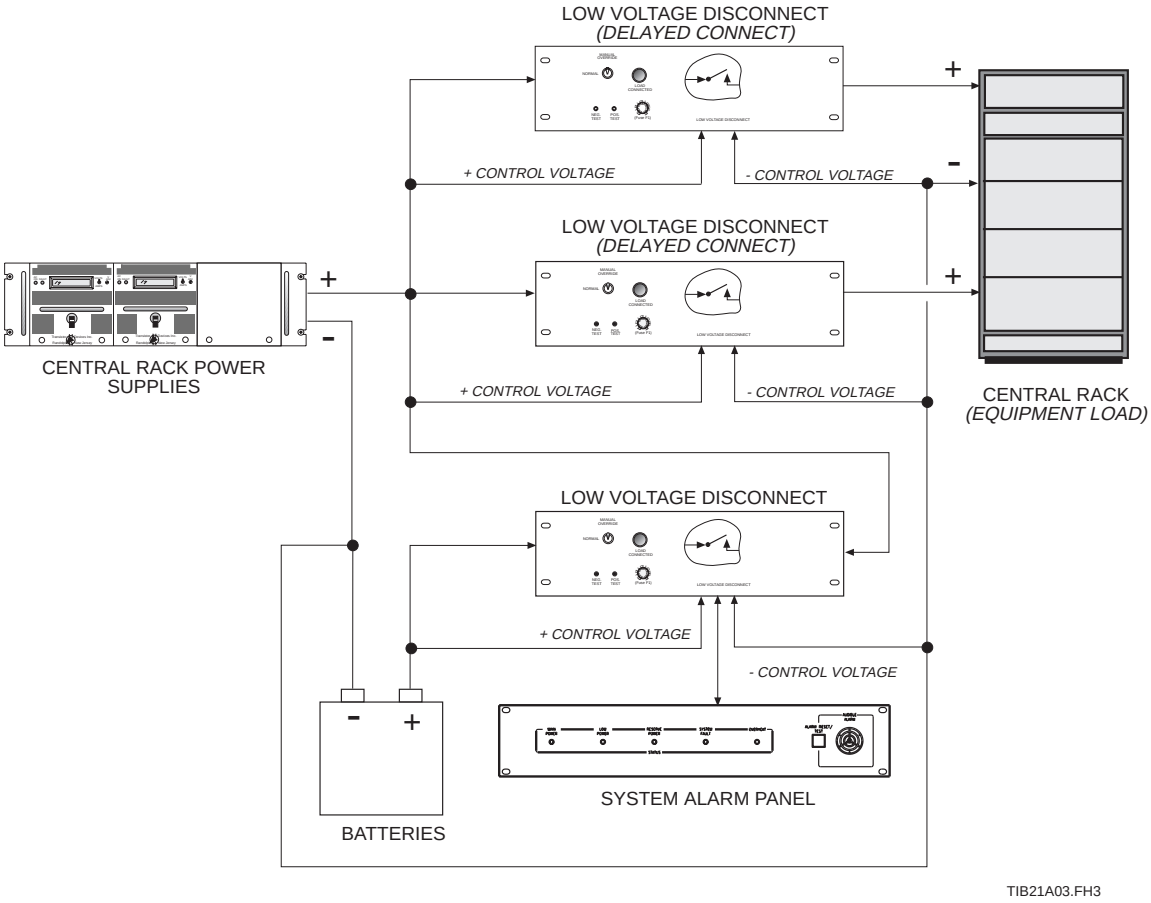


***Figure 5-62. Supply Voltage Connect/Disconnect Block Diagram***

## 5.24 OPERATOR DISTRIBUTION PANEL

The Operator Distribution Panel interfaces the signal cabling of sixteen positions with the central rack equipment. Voice and control signaling is cabled to the Operator Processors. Record audio from the Operator Processors is available at the panel for connection to the legal recorders. The panel is not an LRU, it is part of the central rack. Refer to Section 6 for an illustration of the panel.

## 5.25 RADIO DISTRIBUTION PANEL

The Radio Distribution Panel interfaces the signal cabling of the radio lines from the demarc with the Radio Processor. Voice signals, keying signals, and main/standby control lines are all connected through the panel, as are the record lines from the radio processor cards to the legal recorders. The panel is not an LRU, it is part of the central rack. Refer to Section 6 for an illustration of the panel.

## 5.26 POWER DISTRIBUTION PANEL

The Power Distribution Panel interfaces the power requirements of sixteen positions with the central rack power supplies. Each power line is fused at the Position Fuse Panel. The panel is not an LRU, it is part of the central rack. Refer to Section 6 for an illustration of the panel.

## 5.27 REMOTE RADIO CONNECTIONS

The remote radio trunk lines form an E&M-like trunk that connects the Remote Radio Processor cards to the demarcation points via a dedicated surge protector (i.e., that provides lightning protection). The legal record lines are connected to the demarcation points through the Radio Distribution Panel.

## 5.28 OPERATOR POSITION EQUIPMENT

This paragraph describes the units of the ETVS positions as follows:

- 5.28.1 for TED position equipment
- 5.28.2 for hardkey IBOP equipment
- 5.28.3 for hardkey MBOP equipment

The above paragraphs include a cabling diagram for each type of position. For a subsystem level description of the position equipment, refer to Section 4.

Separate paragraphs, following this paragraph, describe units that are common to all position types.

Refer to Section 3 for illustrations and descriptions of the operator control panels and displays supplied with the TED and hardkey positions. Paragraph 5.28.1 provides functional descriptions of the TED position modules; paragraphs 5.28.2 and 5.28.3, respectively, provide functional descriptions of the hardkey IBOP positions and MBOP Card File and Operator Panel.

Paragraph 5.30 includes rear panel illustrations, with brief descriptions, of all position units mounted on the front panel of the console.

***EMI Protection.*** Position equipment installed in locations requiring EMI precautions have shielded cabling, shielded connectors, and EMI-safe enclosures for all position modules and position electronics housings. The site must provide the necessary circuitry to adequately ground shielded components.

***Position Record.*** Legal record audio of all position audio activity originates at the position electronics located in the card file at TED and mini-BOP positions and in the integrated BOP at hardkey positions. Within the position electronics, the record audio is processed as a digitized audio signal; however, codecs at the output from the position electronics to the central rack convert record audio to an analog signal. Conductors within the cable connecting the position to the central rack carry the analog signal to the appropriate operator distribution panel. A record audio port on the operator distribution panel provides a cable connection to the legal recorder. All positions cabled to the backplane provide record audio to the legal recorder. Record audio includes audio activity in both the Trainee and Instructor headset ear signal paths for both split and normal jackboxes.

***Sidetone.*** Sidetone is the provision of the talker's (instructor or trainee) audio into the earpiece of the talker's headset (HS) as an aural cue that transmission is underway. It is the sound fed back to the receiver as a result of a person speaking into a microphone; this is a consequence of the 2-to-4-wire conversion system. Sidetone is not desirable in circumstances under which the operator is not transmitting (i.e., no call active). Use of sidetone, therefore, is limited to providing individual sidetone to the HS jack during G/G calls, outgoing A/G calls, and relief briefings. The ETVS provides each HS jack with a separate sidetone level adjustment; the sidetone level adjustment controls permit the operator to adjust the sidetone level between -16 dB and -24 dB. NOTE: Only the sidetone generated at the position can be adjusted; sidetone level from sidetone radios cannot be adjusted (attenuated) using these controls. Sidetone is not audible in the speakers and will not contain anything other than outgoing call audio (i.e., the operator's voice).

For the TED positions, a POT Module provides sidetone controls that enable the operator to adjust the volume of the position-generated sidetone. Based on settings made by the operator at the POT Module (see **Figure 5-69**), the position audio board adjusts the gain of headset and sidetone audio. At the hardkey positions, circuitry in the IA module (see **Figure 5-74**) converts levels set at the volume controls to a digital value. The resultant digital values are applied to sum and attenuation circuitry on the Position Audio Board. For the split positions, the split IA modules enable the operator to adjust headset and sidetone levels at the split jackbox. At hardkey positions having the Mini-Basic Operator Panel (MBOP), volume controls are provided for adjusting sidetone audio. Circuitry in the MBOP converts the levels set at these controls to a digital value; the resultant digital values are then applied to the sum and attenuation circuitry on the Position Audio Board.

Keying a sidetone radio which is configured for local or remote sidetone will disable the associated position sidetone (see **Figure 5-26**). Sidetone will come from the radio interface. The sidetone level will be controlled by the HS volume control (rather than the sidetone attenuation controls used for the position) and will be attenuated by 12 dB during a radio PTT.

### 5.28.1 TED Positions (Type 2)

TED positions consist of a:

- Card file
- TED
- Jackbox
- Speaker Module
- Pot Module

If the position supports the split mode it requires, in addition, a:

- TED
- Jackbox
- Speaker Module
- Split Pot Module (that replaces the Pot Module listed above)

This paragraph describes the card file and the boards installed in it and the normal and split Pot Modules. Refer to paragraphs 5.29 and 5.30 for descriptions of the Speaker Module and Jackbox common to all positions.

A cabling diagram for the entire TED position is provided in **Figure 5-63** that shows a normal position and the additional units and cabling required for a split position.

Refer to paragraph 5.31 for a description of the console equipment rear panels.

#### 5.28.1.1 TED Position Card File

**Figure 5-64** illustrates the Position Card File that, with its contents, is an LRU. This unit, installed inside the position console, accommodates up to five cards (non-LRUs) as follows:

- *A single board computer* that manages position control based on control information received from the central rack and control actions taken by the position operator. All boards in the card file plug into the backplane and communicate with the single board computer. Refer to the computer vendor documentation for further information.
- *A Dual Video Control Board* that controls the video display format for two TEDs. This board is only installed in split position card cages.

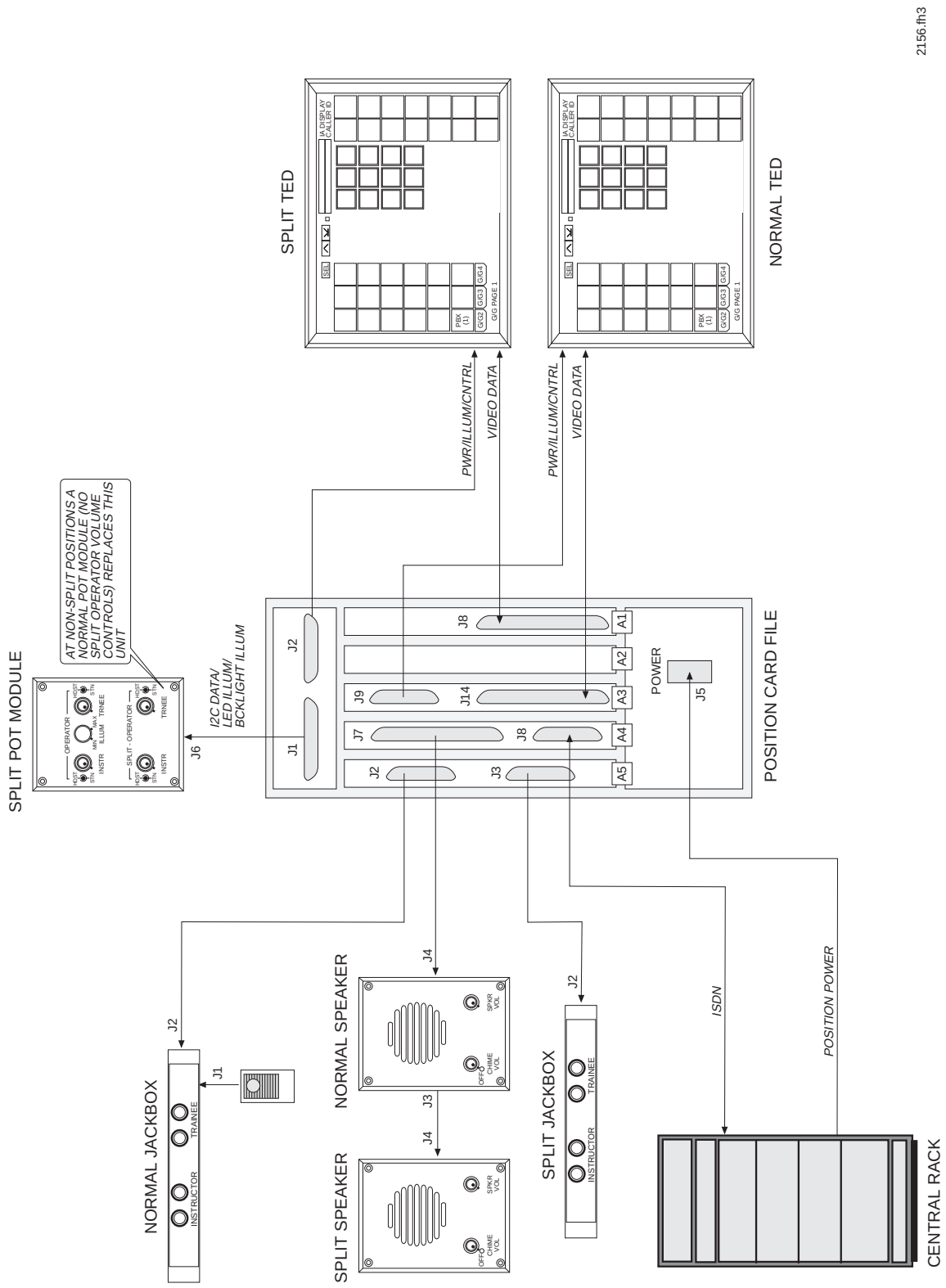


*Figure 5-63. TED Position Cabling*

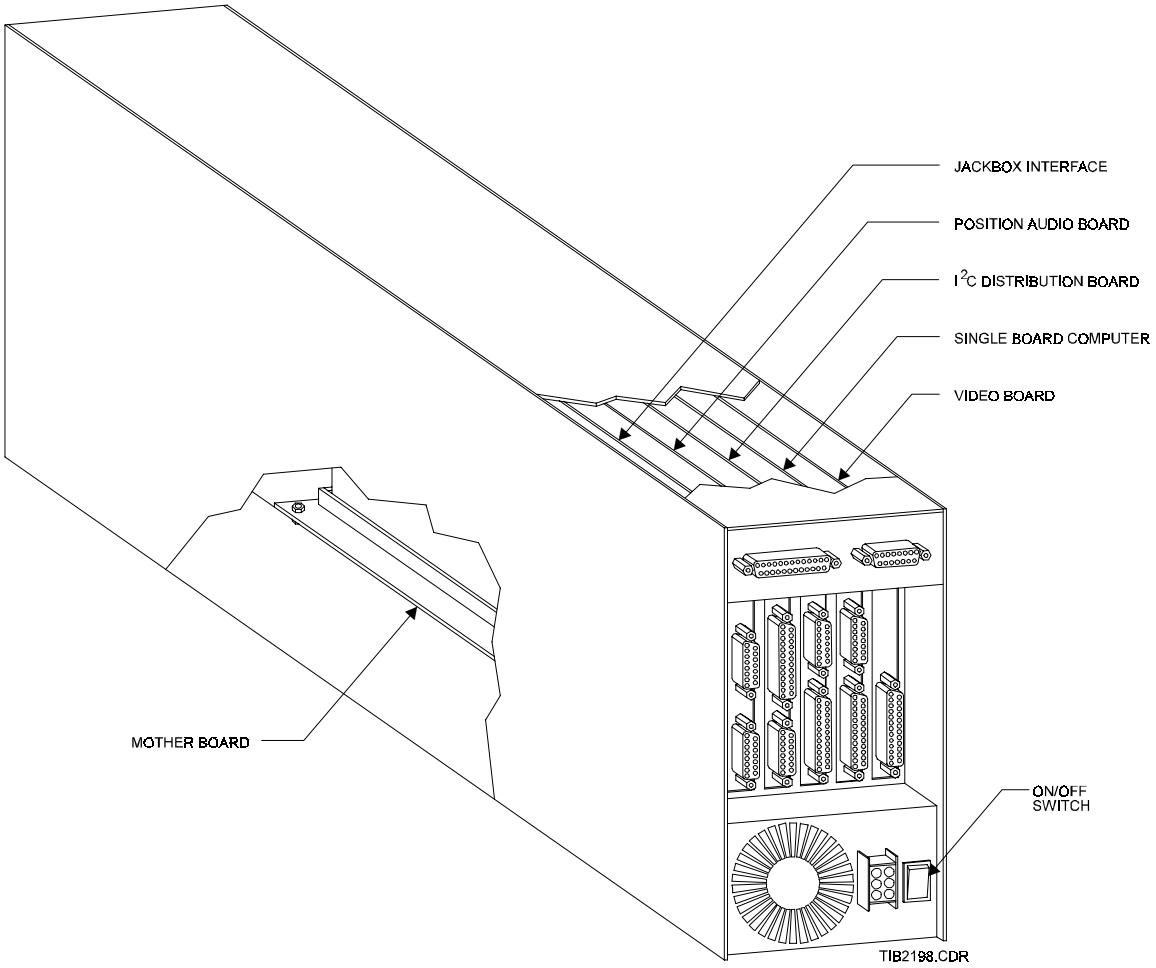


***Figure 5-64. TED Position Card File***

- *An $I^2C$ Distribution Board* (paragraph 5.28.1.2)
- *A Position Audio Board* (paragraph 5.28.1.3)
- *A Jackbox Interface Board* (paragraph 5.28.1.4)

The above cards and an internal hard drive plug into a card file backplane that distributes power to the boards and interfaces the $I^2C$ Distribution Board, Position Audio Board, and Jackbox Interface with the Single Board Computer via an Industry Standard Architecture (ISA) PC bus. Receptacles mounted on the rear panel provide connection to the central rack and position modules. An on/off switch (**Figure 5-64**) on the card file controls application of power to the card file circuitry, including the five cards and hard drive.

There are normal and split versions of the TED card file. Normal position card files contain a Jackbox Interface board that supports a single jackbox. Split position card files contain a Jackbox Interface board that supports two jackboxes. Card files for split positions also have a video card to drive the two TEDs. The single board computer drives the TED at normal positions.

The position card file contains the electronics for the TED position. It interfaces the ISDN links with the position and processes all control and voice data. It outputs analog voice to the jackbox(es) and digital voice to the speaker(s) and receives analog voice from the jackbox(es). An $I^2C$ bus communicates IA display data and caller ID display data to the Pot Module and volume control data from the Pot Module to the card file. Control information, sent over the ISDN link, is communicated to the single board computer over the ISA PC bus. The single board computer manages all position signal processing via the backplane. Failure of the position card cage will cause a loss of voice and position control and possibly a loss of video. Refer to Section 6 for system troubleshooting procedures to isolate position card file failures.

#### 5.28.1.2 $I^2C$ Distribution Board

The $I^2C$ Distribution Board interfaces the following;

- The position $I^2C$ control element with the single board computer
- The Position Audio Board with the Pot Module across an ISA PC bus and $I^2C$ bus
- The TED with the single board computer
- Power interconnection between the central rack and position

Refer to **Figure 5-65** for a block diagram of the board showing signal path interconnection.

#### 5.28.1.3 Position Audio Board

The Position Audio Board does the following:

- Interfaces and manages ISDN data I/O at the position
- Processes ISDN voice data and control data received from and sent to the central rack
- Switches voice and control data to the appropriate position equipment and manages data flow in the various streams that move data throughout the position

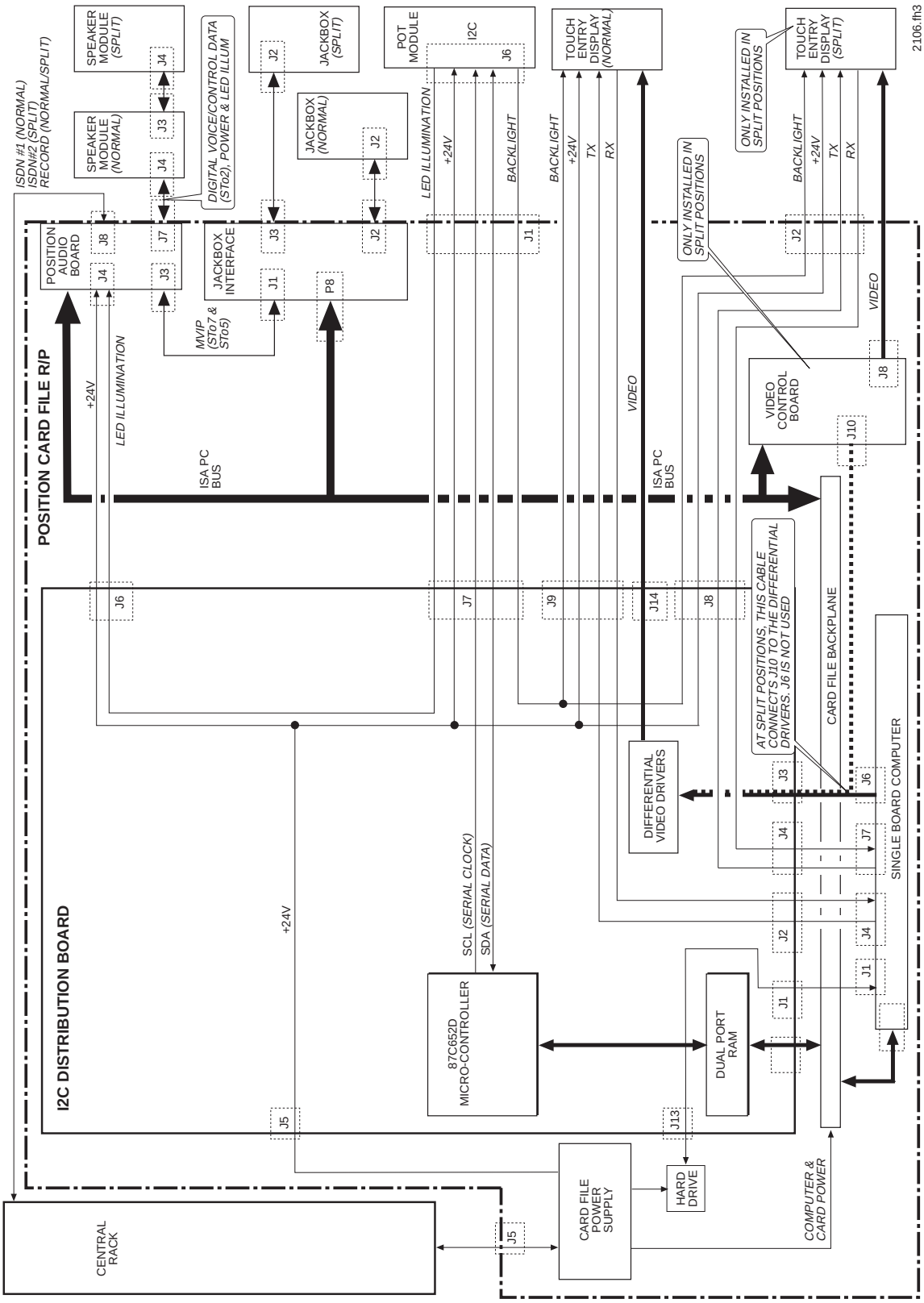


*Figure 5-65. TED I²C Distribution Board Functional Block Diagram*

- Generates all diagnostic and telephone combination tones
- Processes record audio signals from the jackbox interface and speaker
- Processes voice data audio levels from reference values set by the Pot Module volume controls
- Outputs digital speaker audio to the Speaker Module
- Using an ISDN adapter (daughter board), provides microphone AGC. See AGC discussion in paragraph 5.28.1.3.

Refer to **Figure 5-68** for a block diagram.

***ISDN Links.*** Two ISDN lines interconnect the board with the central rack:

- ISDN#1 (primary) for a normal position or split position A/G operator
- ISDN#2 (secondary) for a split G/G operator, if supported by the configuration

In each link the receive line carries:

- Headset/speaker voice data
- Control data

In each link the transmit line carries:

- Mic voice data
- Tone data

ISDN link 1 uses stream (ST) 6 to the Position Audio Board cross-point-switch (CPS) and ISDN Link 2 uses ST18. However the ST Stream MUX circuitry muxes ST18 into ST6 to the CPS.

***Input and Output Connections.*** **Table 5-42** lists the input and output connections for all connectors on the Position Audio Board.

***Cross Point Switch (CPS).*** As shown in **Figure 5-66**, the central component of the Position Audio Board is the Cross Point Switch. This chip manages the flow of voice, control, and address data throughout the position equipment. Signal routing is transparent to the operator and is based on the particular position's configuration and the current operator control functions selected.

*Table 5-42. Position Audio Board Input and Output Connections*

| J3: (Jackbox Interface J1) | | |
|---|---|---|
| **PIN** | **I/O** | **FUNCTION** |
| 1 | Out | STo7 |
| 2 | | DGND |
| 3 | In | STi7 |
| 4 | | DGND |
| 5 | Out | STo5 |
| 6 | | DGND |
| 7 | In | STi5 |
| 8 | | DGND |
| 9 | Out | IF0 |
| 10 | | DGND |
| 11 | Out | C2 |
| 12 | | DGND |
| 13 | Out | CNT_8h |
| 14 | | Not used |
| 15 | | Not used |

| J4: ($I^2C$ Distribution J6) | | |
|---|---|---|
| **PIN** | **I/O** | **FUNCTION** |
| 1 | | DGND |
| 2 | | DGND |
| 3 | | DGND |
| 4 | | DGND |
| 5 | | Not used |
| 6 | Out | Illum |
| 7 | | +24V |
| 8 | | +24V |
| 9 | | +24V |
| 10 | | +24V |

*Table 5-42. Position Audio Board Input and Output Connections (Continued)*

| J8: (ISDN #1, Central Rack) | | |
|---|---|---|
| **PIN** | **I/O** | **FUNCTION** |
| 1 | Out | RCRD1+ (P), Legal record (+) |
| 2 | In | RX1+ (P), Receive data (+) |
| 3 | Out | TX1+ (P), Transmit data (+) |
| 4 | Out | RCRD1+ (S), Legal record (+) |
| 5 | In | RX1+ (S), Receive data (+) |
| 6 | Out | TX1+ (S), Receive data (+) |
| 7 | | GND |
| 8 | | +24V |
| 9 | Out | RCRD2- (P), Legal record (-) |
| 10 | In | RX2- (P), Receive data (-) |
| 11 | Out | TX2- (P), Transmit data (-) |
| 12 | Out | RCRD2- (S), Legal record (-) |
| 13 | In | RX2- (S), Receive data (-) |
| 14 | Out | TX2- (S), Receive data (-) |
| 15 | | GND |

| J7: (RS-485, Speaker Module) | | |
|---|---|---|
| **PIN** | **I/O** | **FUNCTION** |
| 1 | | Not used |
| 2 | | Not used |
| 3 | | PGND |
| 4 | | PGND |
| 5 | In | 4C+ |
| 6 | In | FR+ |
| 7 | Out | STo2+ |
| 8 | In | STi2+ |
| 9 | Out | ILLUM |
| 10 | | +24V |
| 11 | | +24V |
| 12 | | +24V |
| 13 | | PGND |

***Table 5-42. Position Audio Board Input and Output Connections (Continued)***

| J7: (RS-485, Speaker Module) | | |
|---|---|---|
| **PIN** | **I/O** | **FUNCTION** |
| 14 | | PGND |
| 15 | | PGND |
| 16 | | PGND |
| 17 | | PGND |
| 18 | In | 4C- |
| 19 | In | FR- |
| 20 | Out | STo2- |
| 21 | In | STi2- |
| 22 | | +24V |
| 23 | | +24V |
| 24 | | +24V |
| 25 | | PGND |

**Figure 5-67** illustrates a typical routing arrangement for the ETVS (data routing is defined in software and may not be the same in your system). Due to the complexity of signal routing within the position, the illustration shows the basic signal paths only.

Serial stream ST6 carries data to and from the ISDN ports. **Table 5-43** illustrates the contents of each channel of the input and output streams.

***Speaker Data.*** Digital speaker audio on ST2 is connected to the speakers over an RS-485 line. Normal positions have a single speaker and split positions have two speakers. Each speaker picks off its audio data from the appropriate ST channels.

***Jackbox Audio.*** ST7 carries MIC and headset audio to and from the Jackbox Interface. An MVIP-like bus interface connects these lines between the two boards. This interface carries the jackbox voice data for one jackbox at normal positions, or two jackboxes at split positions.

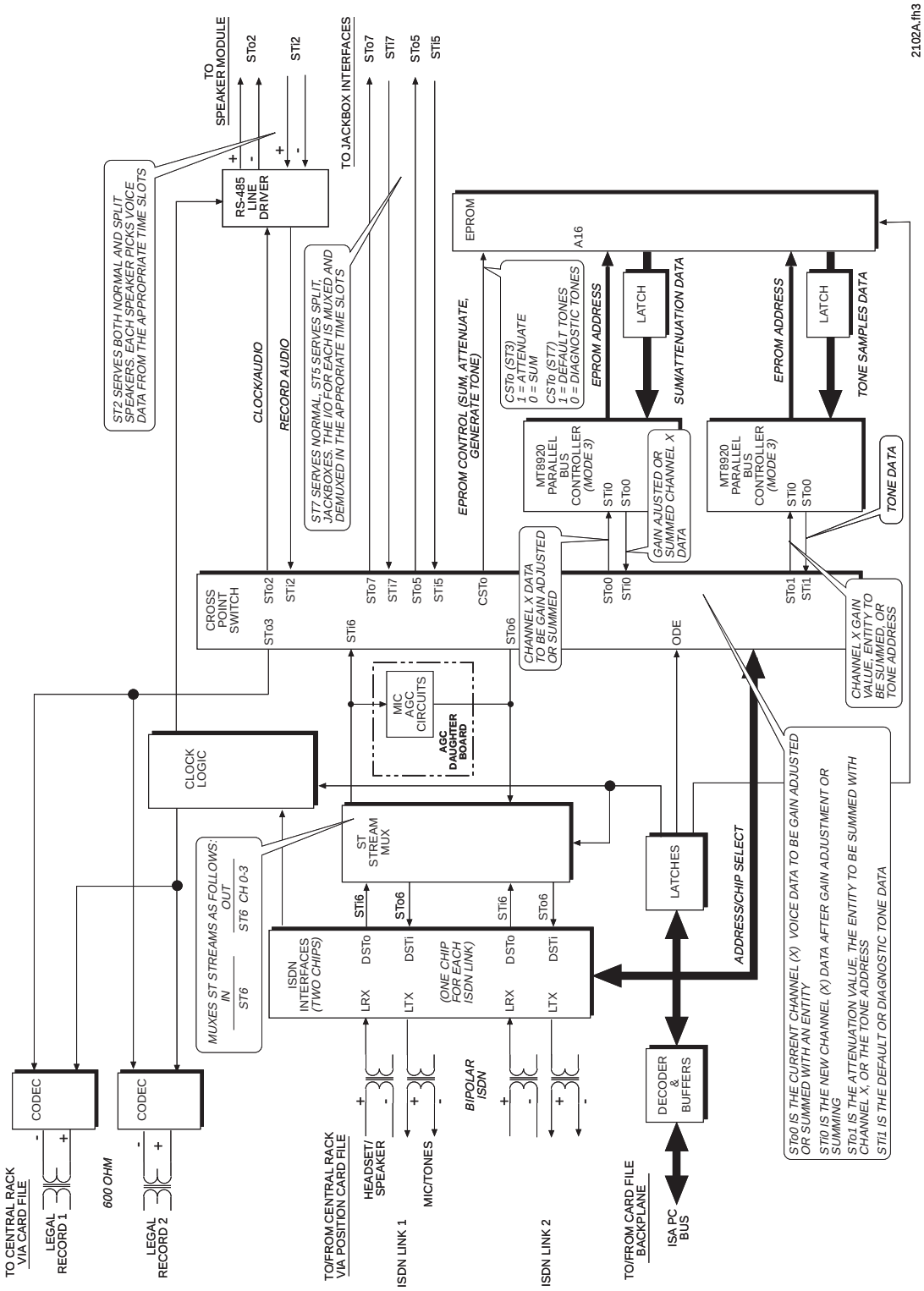


*Figure 5-66. TED Position Audio Board Functional Block Diagram*

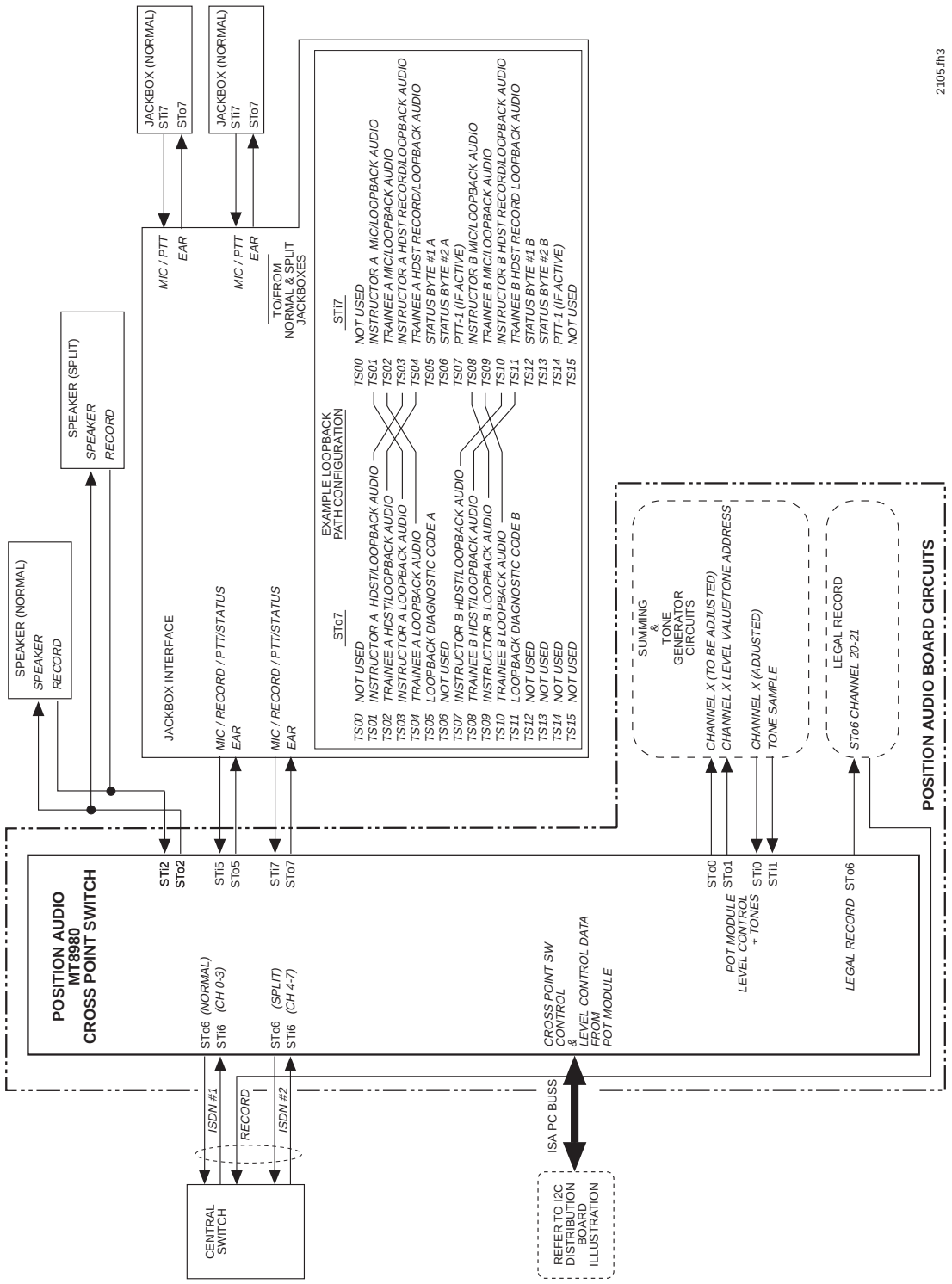


*Figure 5-67. TED Data Routing within the Position*

***Table 5-43. CPS Data Stream ST6/ST18 Channel Allocation***

| | | | | | | | |
|---|---|---|---|---|---|---|---|
| CHO<br>ISDN#1<br>Data | CH1<br>ISDN#1<br>Control | CH2<br>ISDN#1<br>HDST Voice | CH3<br>ISDN#1<br>SPKR Voice | CH4<br>ISDN#2<br>Data | CH5<br>ISDN#2<br>Control | CH6<br>ISDN#2<br>HDST Voice | CH7<br>ISDN#2<br>SPKR Voice |
| CH8<br>Not used | CH9<br>Not used | CH10<br>Not used | CH11<br>Not used | CH12<br>Not used | CH13<br>Not used | CH14<br>Not used | CH15<br>Not used |
| CH16<br>Not used | CH17<br>Not used | CH18<br>Not used | CH19<br>Not used | CH20<br>Not used | CH21<br>Not used | CH22<br>Not used | CH23<br>Not used |
| CH24<br>Not used | CH25<br>Not used | CH26<br>Not used | CH27<br>Not used | CH28<br>Not used | CH29<br>AGC<br>Threshold | CH30<br>Mic AGC<br>(Non-split) | CH31<br>Mic AGC<br>(Split) |

*Channels 29, 30, and 31 used at AGC positions only.*

*(STi 6) Channel Allocations to Position*

| | | | | | | | |
|---|---|---|---|---|---|---|---|
| CHO<br>ISDN#1<br>Data | CH1<br>ISDN#1<br>Control | CH2<br>ISDN#1<br>MIC Voice | CH3<br>ISDN#1<br>Diagnostics | CH4<br>ISDN#2<br>Data | CH5<br>ISDN#2<br>Control | CH6<br>ISDN#2<br>MIC Voice | CH7<br>ISDN#2<br>Diagnostics |
| CH8<br>Not used | CH9<br>Not used | CH10<br>Not used | CH11<br>Not used | CH12<br>Not used | CH13<br>Not used | CH14<br>Not used | CH15<br>Not used |
| CH16<br>Not used | CH17<br>Not used | CH18<br>Not used | CH19<br>Not used | CH20<br>Not used | CH21<br>Not used | CH22<br>Not used | CH23<br>Not used |
| CH24<br>Not used | CH25<br>Not used | CH26<br>Not used | CH27<br>Not used | CH28<br>Not used | CH29<br>Not used | CH30<br>Mic Voice<br>(Non-split) | CH31<br>Mic Voice<br>(Split) |

*Channels 30 and 31 used at AGC positions only; channels 2 and 6 used at non-AGC positions only.*

*(STo 6) Channel Allocations from Position*

***Tone Generation.*** The board generates both normal communications tones and diagnostics tones. To output a tone, the CPS connects ST7 to the CSTo line. If bit 3 of the channel is set to 1 or zero, data at CPS STo1 is interpreted as tone address data to the EPROM. If CSTo is a one, the data addresses communications tones; if a zero, it addresses diagnostic tones. The tone samples are generated from look-up tables programmed into the PROM. STi0 of the CPS accepts the resultant tone and switches it to the appropriate channel in the relevant ST stream.

***Data Summing.*** In moving voice data within the position, the Audio Board sums data in certain instances. To sum two entities, the CPS connects ST3 to the CSTo line. Bit 3 of the channel must be at zero. With the CSTo line in this state, data entering the summing circuitry on STo0 is recognized as one entity of a sum to be made with a second entity at STo1. The result is fed to the CPS at STi0 and switched to the appropriate channel and data stream.

***Signal Gain Adjustment.*** Based on settings made by the operator at the Pot Module volume controls, the Audio Board adjusts the gain of headset and sidetone audio. To set gain, ST3 bit 1 on the CSTo line is set to one. With CSTo bit 1 at one, data input at STo1 is read as a gain adjust value to be applied to the channel data present at STo0. The resultant adjusted channel data is output to the CPS at STo0. This data is switched to the appropriate channel in ST7 to the Jackbox Interface.

**Automatic Gain Control.** An ISDN adapter (daughter card) is plugged into the position audio card to provide microphone AGC. The 120765-001 card is used for non-split positions; the 120766-001 card is used for split positions.

The non-split ISDN adapter contains only a Field Programmable Gate Array (FPGA). The split ISDN adapter contains an FPGA and an 8930 (ISDNS/T Interface Transceiver). The ISDN adapter receives frame delayed by 4 channels (8930 frame out) and a 4 MHz clock for timing . The adapter also taps the ST stream in and out. The FPGA reads the data contained in channel 29 (referenced to frame on the position audio, not the delayed frame) to determine if AGC is to be enabled and what threshold should be used. The FPGA outputs this AGC setting on channel 29, which is read by software for display on the position. The AGC output level is –10 dBm. The attack time is approximately 8 ms and the release time for a 12-dB step in regulation is approximately 520 ms. The FPGA performs the AGC operation on the digital audio contained in channel 30 for the 120765-001 card (non-split), and channels 30 and 31 for the 120766-001 card (split).

Inputs are as follows:

STo6 channel 30 = Regular Mic
STo6 channel 31 = Split Mic

Outputs are as follows:

STi6 channel 29 = AGC threshold level
STi6 channel 30 = Regular Mic with AGC
STi6 channel 31 = Split Mic with AGC

Control values are assigned to command the AGC circuit to turn AGC on or off, or to set different threshold values for the AGC. (The initial setting is a nominal –18 dB threshold). The microphone audio is transformed by the AGC function, and the output of the AGC circuit is cross-connected to the cross point switch MT 8980.

Dial code entries (see Section 6, paragraph 6.3.3.9) allow the user to: turn off the AGC, change the AGC threshold value, or read the current AGC threshold value setting.

### 5.28.1.4 Jackbox Interface

The Jackbox Interface performs the following functions:

- Connects the digital environment of the Position Audio Board with the analog environment of the Jackbox and the devices plugged into it
- Processes the position voice data for output to the jackbox as analog signals
- Converts analog mic audio from the jackbox to a digital signal
- Integrates PTT control signals from the headset or foot switch plugged into the jackbox.

Refer to **Figure 5-68** for a functional block diagram.

***Input and Output Connections.*** **Table 5-44** lists the input and output connections for all connectors on the Jackbox Interface.

J1, and J2 are not used in the ETVS. J3 provides the same I/O as J4 but from the card cage motherboard.

***Table 5-44. Jackbox Interface Input and Output Connections***

| **J4: (Jackbox J1)** | | | |
|---|---|---|---|
| **PIN J3** | **PIN J4** | **I/O** | **FUNCTION** |
| 1 | 1 | In | -I MIC, Instructor mic (-) |
| 2 | 9 | In | +I MIC, Instructor mic (+) |
| 3 | 2 | Out | -I HS LIM, Instructor ear (-) |
| 4 | 10 | Out | +I HS LIM, Instructor ear (+) |
| 5 | 3 | In | /I PTT, Instructor PTT |
| 6 | 11 | | DGND |
| 7 | 4 | In | -T MIC, Trainee mic (-) |
| 8 | 12 | In | +T MIC, Trainee mic (+) |
| 9 | 5 | Out | -T HS LIM, Trainee ear (-) |
| 10 | 13 | Out | +T HS LIM, Trainee ear (+) |
| 11 | 6 | In | /T FS PTT, Trainee PTT |
| 12 | 14 | | DGND |
| 13 | 7 | | DGND |
| 14 | 15 | | AGND |
| 15 | 8 | | Not used |

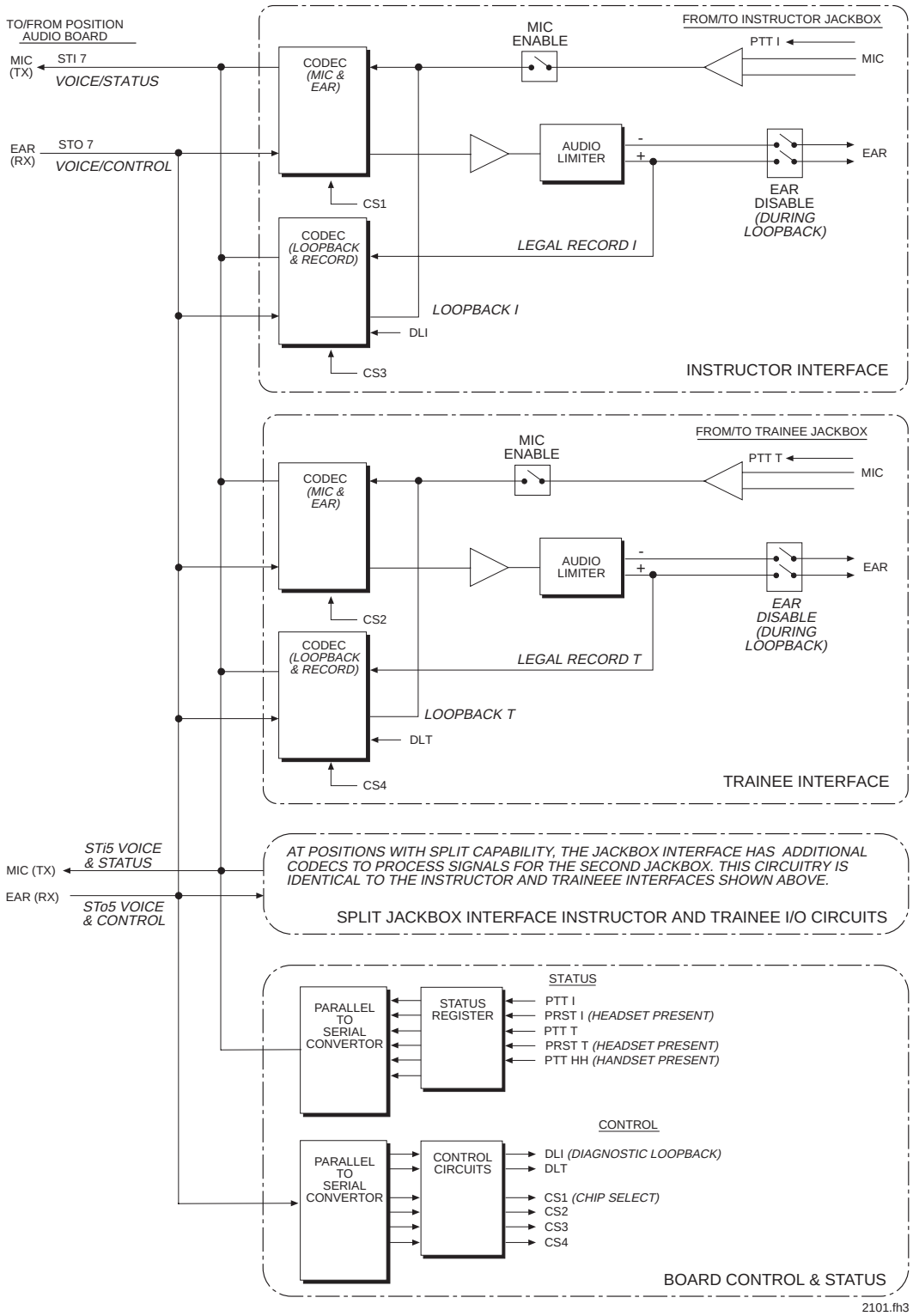


*Figure 5-68. TED Jackbox Interface Functional Block Diagram*

Two types of Jackbox Interfaces are available:

- One for normal positions that interfaces a single jackbox
- One for split positions that interfaces two jackboxes.

A data link connects the Jackbox Interface with the Position Audio Board. Data is transferred between the two units using ST7 and ST5. The appropriate channels for each jackbox are picked off by the relevant codecs.

At a normal position, the Jackbox Interface uses four codecs to perform its functions as follows:

- *Voice Data Codecs.* Two codecs process voice signals to and from the Jackbox. One processes signals for the Instructor jack and the other for the Trainee jack.
- *Loopback Codecs.* Two codecs perform loopback duties for system maintenance purposes. One performs loopback of Instructor jack signals and the other of Trainee jack signals. Loopback can be set up in either direction.

At a split position, four additional codecs perform the above functions for the second jackbox.

In addition, the Jackbox Interface provides:

- *Legal Record Audio.* The loopback codecs also process record signals that are sent to the Position Audio Board as digital data in the ST stream.
- *PTT Signals.* The board processes PTT signals as status data. Additionally, headset, mic, and hand-held phone presence signals are also processed as status data. Board control is through chip-select signals .

**Figure 5-67** illustrates example channel allocations of voice and status data on ST7. Loopback must be configured from the SCT. The figure lists the available loopbacks.

The control logic establishes codec functions through chip-select lines and loopback control lines. They receive control data from the single board computer via the position audio board and STO7. A status register encodes PTT messages for the instructor and trainee headsets and from a handset. The status register also monitors the presence of headsets and handsets plugged into the jackbox. The position will not

function unless at least one headset or handset is plugged into the jackbox (each jackbox at split positions). The status information is returned to the single board computer via STI7 and the position audio board.

The analog portion of the instructor and trainee ear signal paths contain audio limiters that limit the audio level to pre-established levels over the voice frequency range. Audio in excess of -21 dBm is reduced to -21dBm within 10±5 ms. For signal levels diminishing from above -21 dBm to less than -21 dBm, limiting is suspended within 550±150 ms.

#### 5.28.1.5 Pot Module

There are two types of pot modules available:

- One for normal positions with controls for one Jackbox
- One for split positions with controls for two Jackboxes

The Pot Module performs the following functions:

- Enables the normal operator to adjust headset and sidetone audio levels at the normal position Jackbox
- Processes the analog levels at the volume controls to digital signals on the $I^2C$ bus to the Position Audio Board
- Enables the operator to adjust the illumination level at the TED and Speaker Modules at normal and split positions

The split Pot Module performs the following additional function:

- Enables the split operator to adjust headset and sidetone audio at the split position Jackbox

Refer to **Figure 5-69** for a functional block diagram of the unit.

***Input and Output Connections.*** **Table 5-45** lists the input and output connections for all connectors on the Pot Module.

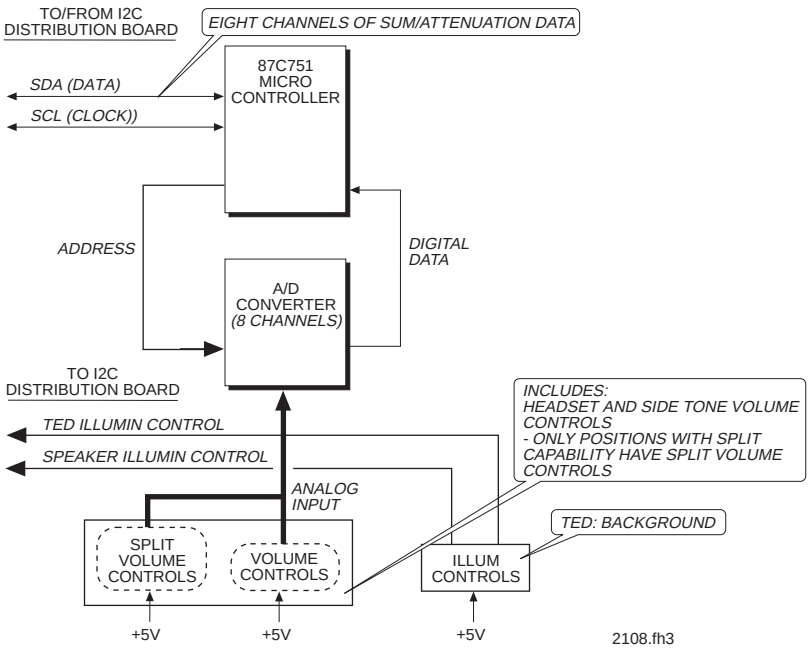


***Figure 5-69. Pot Module Functional Block Diagram***

***Table 5-45. Pot Module Input and Output Connections***

| **J7: ($I^2C$ Distribution Board J3)** | | |
|---|---|---|
| **PIN** | **I/O** | **FUNCTION** |
| 1 | I/O | SDA, $I^2C$ data |
| 2 | I/O | SCL, $I^2C$ clock |
| 3 | | PGND |
| 4 | | PGND |
| 5 | | N/C |
| 6 | | N/C |
| 7 | | N/C |
| 8 | Out | LED ILUM |
| 9 | In | +24V |
| 10 | In | +24V |
| 11 | In | +24V |
| 12 | In | +24V |
| 13 | | AGND |

***Table 5-45. Pot Module Input and Output Connections (Continued)***

| J7: ($I^2C$ Distribution Board J3) | | |
|---|---|---|
| **PIN** | **I/O** | **FUNCTION** |
| 14 | | PGND |
| 15 | | PGND |
| 16 | | PGND |
| 17 | | PGND |
| 18 | | N/C |
| 19 | | N/C |
| 20 | | N/C |
| 21 | Out | BCK ILUM, TED brightness |
| 22 | In | +24V |
| 23 | In | +24V |
| 24 | In | +24V |
| 25 | | PGND |

***Micro Controller.*** The Micro-controller manages the $I^2C$ bus access to the Pot Module.

***Volume Controls.*** Each volume control is a potentiometer that establishes a voltage level value at the input pins of an eight channel analog-to-digital converter. Each control uses one channel in the converter. The digital value for each volume setting is sent over the $I^2C$ bus to the Position Audio Board where it is processed by the summing and tone generation circuitry (refer to paragraph 5.28.1.3) to adjust the level of the digital voice signals to the Jackbox Interface.

***Illumination Control.*** The illumination control adjusts the illumination level, or brightness, of the position TED and Speaker Module CHIME OFF indicator. The Pot Module has a single illumination control for normal or split positions.

### 5.28.1.6 Touch Entry Device

ETVS TED positions located in TRACON facilities use standard backlight LCDs (liquid crystal display); however, positions located in control towers use high intensity backlight LCDs to counter the effect of high ambient light levels in control towers.

Both types of LCDs have touch sensitive digital matrix systems attached. The touch interface is a 40 x 25 resistive matrix connected to a controller that detects changes in touch status and transmits identifying codes over the serial interface to the single board

computer in the Position Card File. The position electronics scans the matrix every 25 ms. Up to 16 switch events are buffered. All events are debounced by ignoring status changes until the second scan after the new event. The event message consists of a three character code. The first character defines the state change, the second the key row, and the third the key column. Key actions are not prioritized, but are handled on a first-come-first-served basis. The matrix also sends a watchdog status message to the system every 1 to 5 seconds to indicate it is functioning. Failure of the matrix results in no watchdog message. The system responds by reporting a failed TED at the SCT.

The TED front panel is illustrated in **Figure 3-1**. The images displayed by the TED are described in Section 3. **Figure 5-81** illustrates the rear panel connections.

### 5.28.2 Integrated Basic Operator Positions (Type 1)

Integrated Basic Operator Positions consist of an:

- Integrated Basic Operator Panel (IBOP)
- Jackbox
- Speaker Module
- Foot Switch
- IA Module (if required)

Plus at least one:

- Radio Selector (if required)

And:

- Direct Access (DA) Selectors (if required) for additional DA lines.

If the position supports the split mode, it requires, in addition, a:

- Jackbox
- Speaker Module
- Split IA Module (that replaces the IA Module listed above)

If it is a supervisor position, it requires an:

- SCT
- Supervisory Recorder

If it is a maintenance position, it requires an:

- MCT

This paragraph describes the BOP and normal and split IA Modules. Refer to paragraph 5.29 and 5.30 for descriptions of the Speaker Module and Jackbox common to all positions.

The Radio and DA Selectors are vendor items. Refer to Section 3 for a description of their functions and paragraph 5.37 for a functional description.

Refer to paragraph 5.31 for descriptions of the console equipment rear panels.

A cabling diagram of a typical hardkey split position is provided in **Figure 5-70**. Cabling for normal positions is similar but requires cables for only one speaker and jackbox. The IA Module at a non-split position does not have split operator volume controls but otherwise is identical.

#### 5.28.2.1 Position Signal Paths

**Figure 5-71** shows the basic signal paths of a split hardkey position. The illustration omits power and ground lines and shows bipolar signals as a single line for clarity. Similarly, the instructor and trainee signal lines are reduced to one line for each jackbox device. Cross-point-switch ST streams are indicated where appropriate. The only on-board devices shown are the CPS and the codecs, again for clarity. Refer to **Figure 5-75** for a functional block diagram of the BOP showing the major components on each board.

#### 5.28.2.2 Integrated Basic Operator Panel (IBOP)

**Figure 5-72** illustrates the BOP. It installs on the console front panel and consists of four sub-assemblies integrated into one module as follows:

- *A key panel* that the operator uses to make voice channel and operator control selections. LEDs located adjacent to each key display current control selections. The membrane type keys are backlighted and provide tactile feedback when pressed. Nomenclature printed on the surface of each key identifies its function. Refer to Section 3 for further information on the BOP keypads.

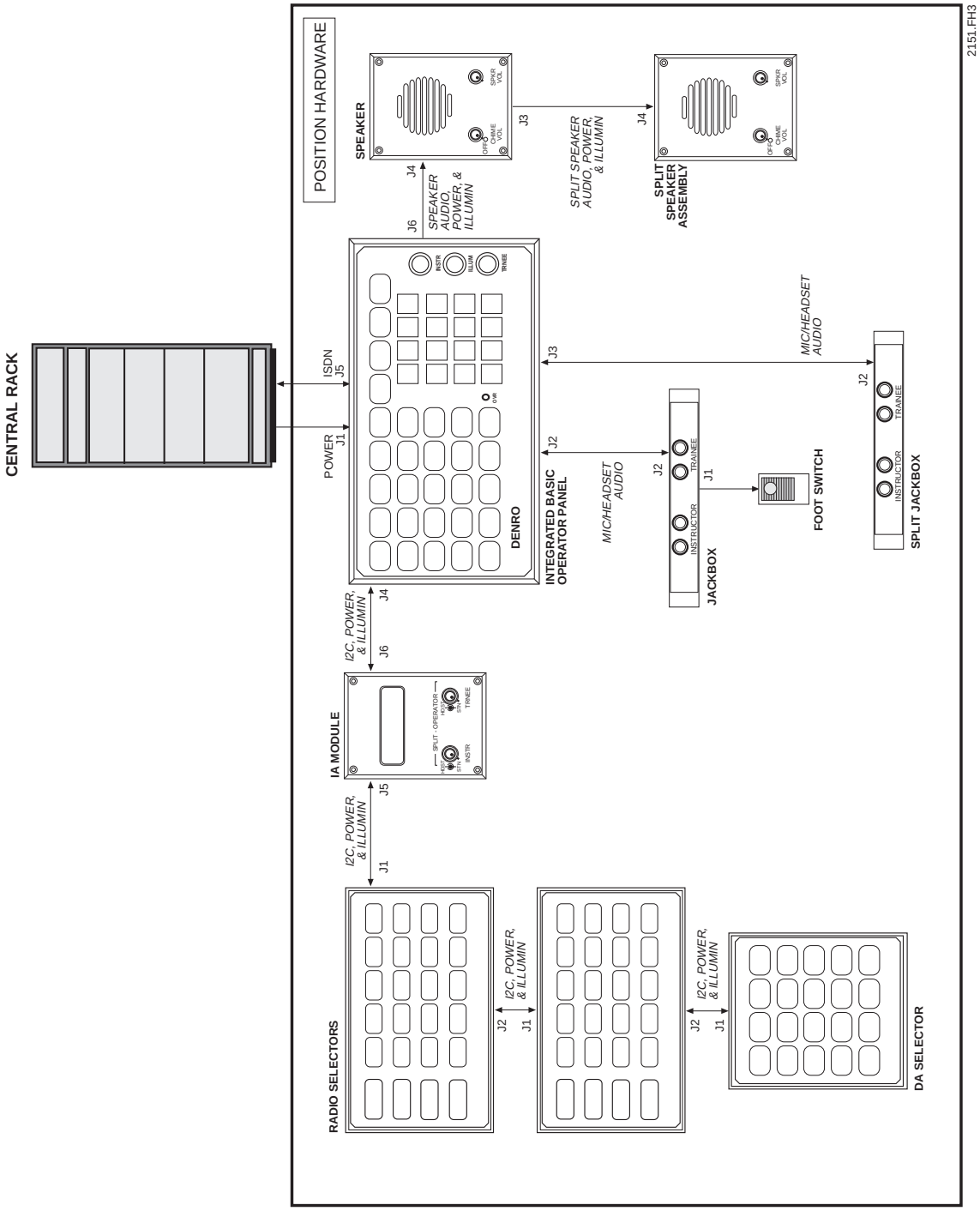


*Figure 5-70. IBOP Position Cabling*

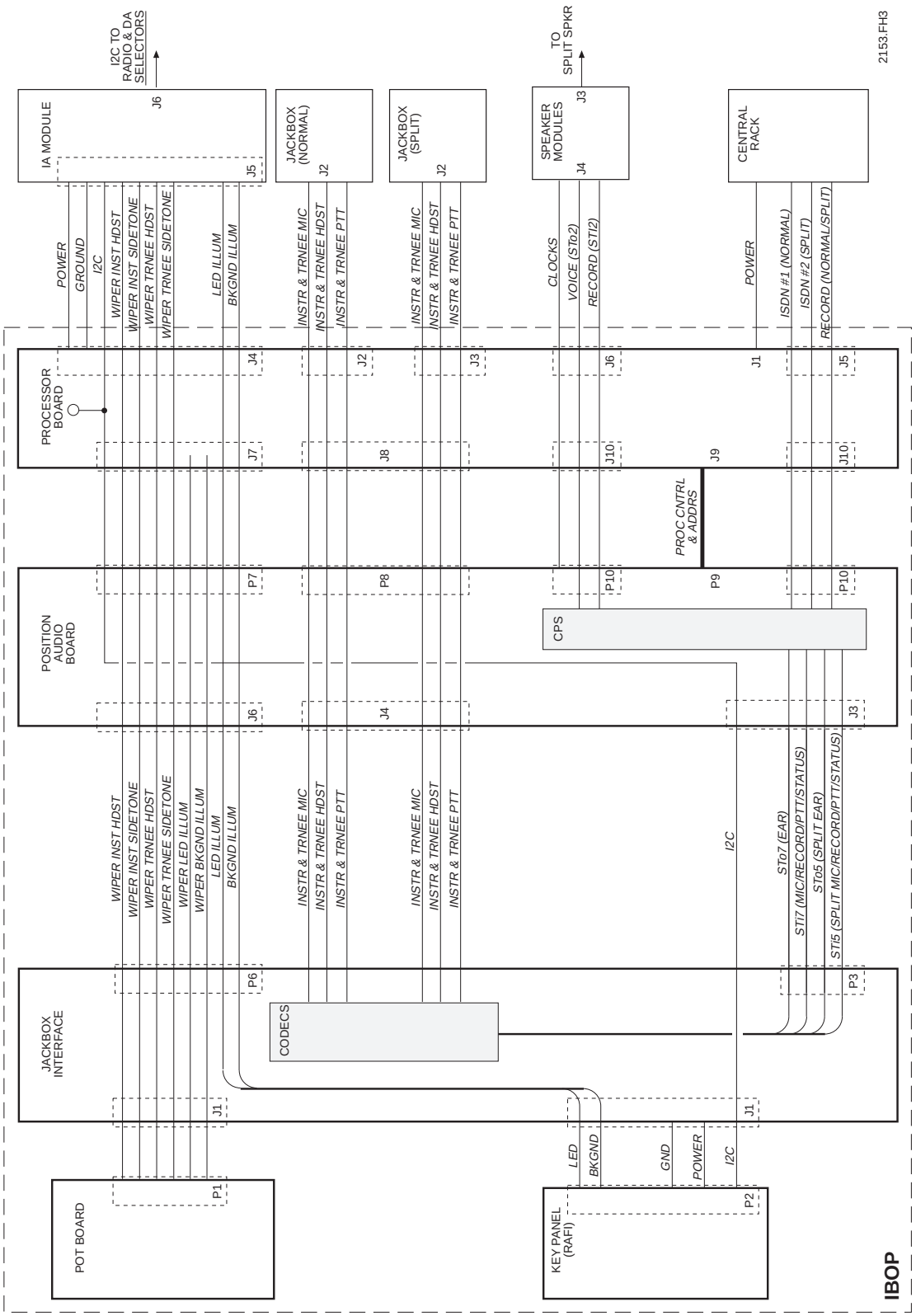


*Figure 5-71. IBOP Position Signal Paths*

Volume and illumination controls to the right of the key panel control headset and sidetone audio at the normal position headset and the illumination level at all console key panels. These controls are located on the pot board installed behind the key panel. Circuitry in the IA Module converts the levels set at these controls to a digital value. The resultant digital values are applied to the sum and attenuation circuitry on the Position Audio Board.

- *A Jackbox Interface Board* (paragraph 5.28.2.3)
- *A Position Audio Board* (paragraph 5.28.2.4)
- *A Processor Board* (paragraph 5.28.2.5)

The above cards are integral parts of the BOP which is the line replaceable item.

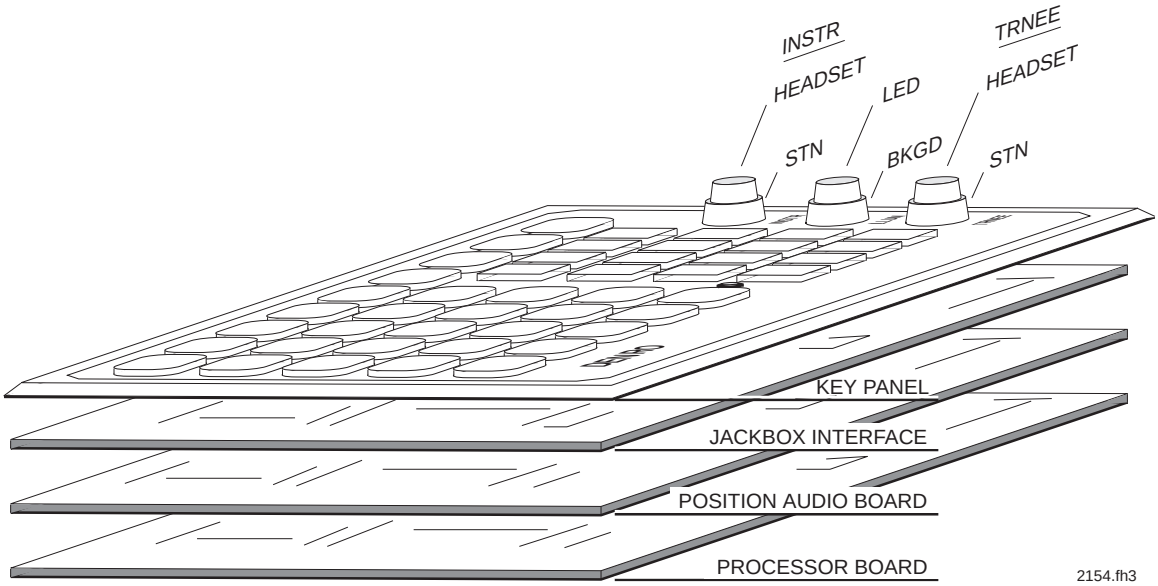


***Figure 5-72. Sub-assemblies of the Basic Operator Panel***

### 5.28.2.3 Jackbox Interface

The Jackbox Interface performs the following functions:

- Provides feedthrough interface of all signal and power lines to the BOP key panel and pot board
- Connects the digital environment of the Position Audio Board with the analog environment of the Jackbox and the devices plugged into it
- Processes the position voice data for output to the jackbox as analog signals

- Converts analog mic audio from the jackbox to a digital signal
- Integrates PTT control signals from the headset or foot switch plugged into the jackbox
- Provides Headset present identification

Refer to **Figure 5-73** for a functional block diagram. The board is functionally the same as the TED Jackbox Interface described in paragraph 5.28.1.4.

#### 5.28.2.4 Position Audio Board

The Position Audio Board does the following:

- Provides feedthrough interface of all signal and power lines to the Jackbox Interface, key panel, and pot board
- Interfaces and manages ISDN data I/O at the position
- Processes ISDN voice data and control data received from and sent to the central rack
- Switches voice and control data to the appropriate position equipment
- Manages data flow in the various streams that move data throughout the position
- Generates all diagnostic and telephone communications tones
- Processes record audio signals from the jackbox interface and speaker
- Processes voice data audio levels from reference values set by the BOP and split IA Module volume controls
- Manages voice and control data flow to and from the Jackbox Interface
- Outputs digital speaker audio to the Speaker Module
- Using an ISDN adapter (daughter board), provides microphone AGC. See AGC discussion in paragraph 5.28.1.3.

Refer to **Figure 5-73** for a block diagram.

Functionally, the BOP Position Audio Board is the same as that in the TED position card file. The CPS ST switching matrix is the major difference. ST6 is used for both ISDN #1 and #2 and ST3 is used for legal record.

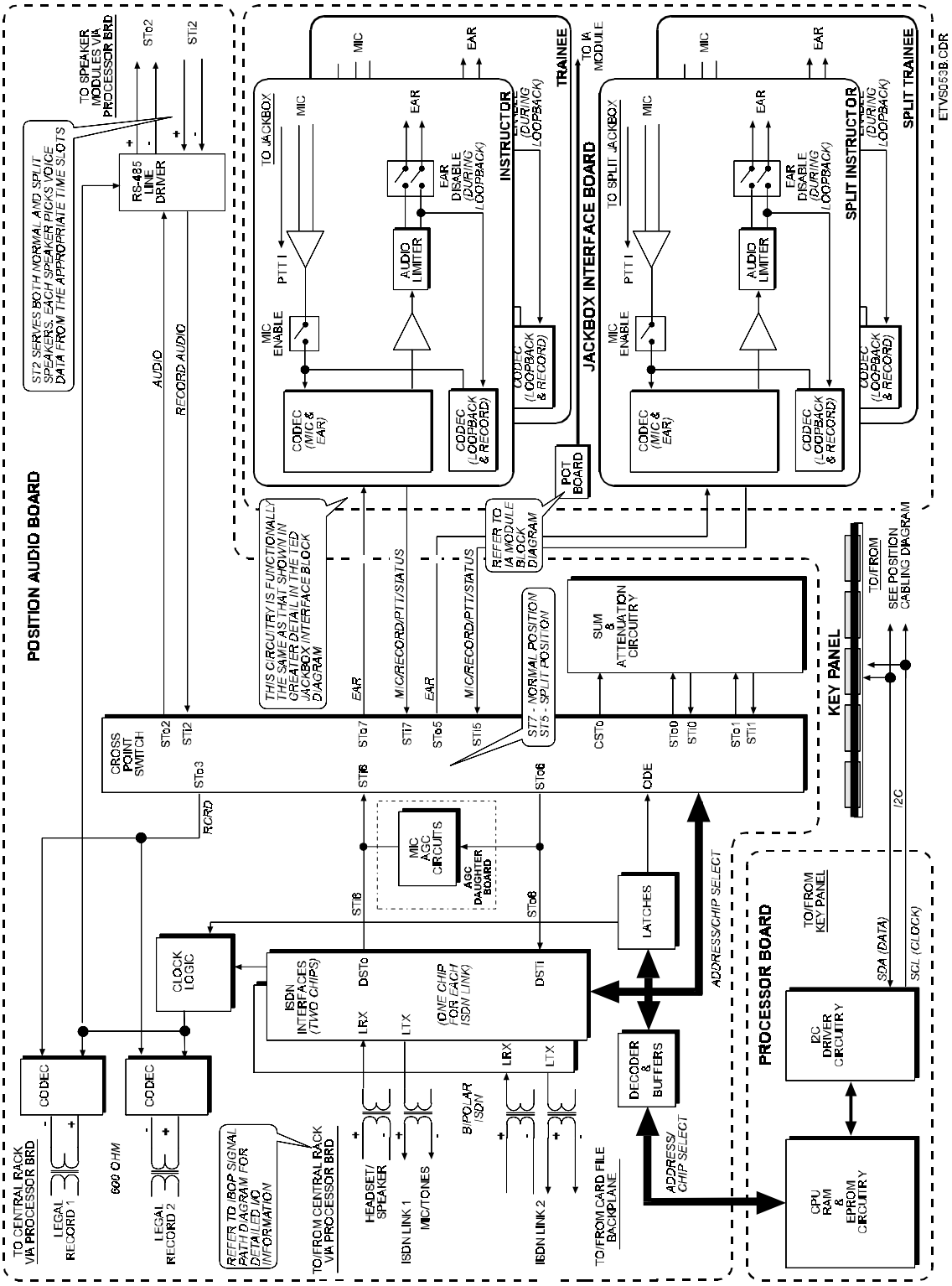


*Figure 5-73. IBOP Functional Block Diagram*

### 5.28.2.5 Processor Board

The Processor Board manages position control based on control information received from the central rack and control actions taken by the position operator. The processor communicates with all BOP boards. The $I^2C$ microcontroller is located on the Processor Board. **Table 5-46** lists the BOP input and output connections.

***Table 5-46. BOP Input and Output Connections***

| J1: (Central Rack) | | |
|---|---|---|
| **PIN** | **I/O** | **FUNCTION** |
| 1 | | PGND |
| 2 | | +24V |
| 3 | | PGND |
| 4 | | +24V |
| 5 | | +24V |
| 6 | | PGND |

| J2 & J3: (Jackbox J1) | | | |
|---|---|---|---|
| **PIN J2** | **PIN J3** | **I/O** | **FUNCTION** |
| 1 | 1 | In | -I MIC, Instructor mic (-) |
| 9 | 9 | In | +I MIC, Instructor mic (+) |
| 2 | 2 | Out | -I HS LIM, Instructor ear (-) |
| 10 | 10 | Out | +I HS LIM, Instructor ear (+) |
| 3 | 3 | In | /I PTT, Instructor PTT |
| 11 | 11 | | DGND |
| 4 | 4 | In | -T MIC, Trainee mic (-) |
| 12 | 12 | In | +T MIC, Trainee mic (+) |
| 5 | 5 | Out | -T HS LIM, Trainee ear (-) |
| 13 | 13 | Out | +T HS LIM, Trainee ear (+) |
| 6 | 6 | In | /T FS PTT, Trainee PTT |
| 14 | 14 | | DGND |

*Table 5-46. BOP Input and Output Connections (Continued)*

| J2 & J3: (Jackbox J1) | | | |
|---|---|---|---|
| **PIN J2** | **PIN J3** | **I/O** | **FUNCTION** |
| 7 | 7 | | DGND |
| 15 | 15 | | AGND |
| 8 | 8 | | Not used |

| J4: (IA Module J5) | | |
|---|---|---|
| **PIN** | **I/O** | **FUNCTION** |
| 1 | I/O | SDA, $I^2C$ data |
| 2 | I/O | SCL, $I^2C$ clock |
| 3 | | PGND |
| 4 | | PGND |
| 5 | In | V ref |
| 6 | Out | I HDST, Instructor headset |
| 7 | Out | T HDST, Trainee headset |
| 8 | Out | LED ILUM, Speaker LED illumination |
| 9 | Out | +24V |
| 10 | Out | +24V |
| 11 | Out | +24V |
| 12 | Out | +24V |
| 13 | | AGND |
| 14 | | PGND |
| 15 | | PGND |

*Table 5-46. BOP Input and Output Connections (Continued)*

| J4: (IA Module J5) | | |
|---|---|---|
| **PIN** | **I/O** | **FUNCTION** |
| 16 | | PGND |
| 17 | | PGND |
| 18 | In | +5V |
| 19 | Out | I STN, Instructor sidetone |
| 20 | Out | T STN, Trainee sidetone |
| 21 | Out | BCK ILUM, TED brightness |
| 22 | Out | +24V |
| 23 | Out | +24V |
| 24 | Out | +24V |
| 25 | | PGND |

| J5: (ISDN #1 & #2, Central Rack) | | |
|---|---|---|
| **PIN** | **I/O** | **FUNCTION** |
| 1 | Out | RCRD1(P), Normal legal record (+) |
| 2 | In | RX1(P), Normal receive data (+) |
| 3 | Out | TX1(P), Normal transmit data (+) |
| 4 | Out | RCRD1(S), Split legal record (+) |
| 5 | In | RX1(S), Split receive data (+) |
| 6 | Out | TX1(S), Split transmit data (+) |
| 7 | | PGND |
| 8 | Out | +24V |
| 9 | Out | RCRD2(P), Normal legal record (-) |
| 10 | In | RX2(P), Normal receive data (-) |
| 11 | Out | TX2(P), Normal transmit data (-) |
| 12 | Out | RCRD2(S), Split legal record (-) |
| 13 | In | RX2(S), Split receive data (-) |
| 14 | Out | TX2(S), Split transmit data (-) |
| 15 | | PGND |

**NOTE:** Normal operator = ISDN#1
Split operator = ISDN#2

*Table 5-46. BOP Input and Output Connections (Continued)*

| J6: (RS-485, Speaker Module) | | |
|---|---|---|
| **PIN** | **I/O** | **FUNCTION** |
| 1 | | Not used |
| 2 | | Not used |
| 3 | | PGND |
| 4 | | PGND |
| 5 | In | 4C+ |
| 6 | In | FR+ |
| 7 | Out | STo2+ |
| 8 | In | STi2+ |
| 9 | Out | ILLUM |
| 10 | | +24V |
| 11 | | +24V |
| 12 | | +24V |
| 13 | | PGND |
| 14 | | PGND |
| 15 | | PGND |
| 16 | | PGND |
| 17 | | PGND |
| 18 | In | 4C- |
| 19 | In | FR- |
| 20 | Out | STo2- |
| 21 | In | STi2- |
| 22 | | +24V |
| 23 | | +24V |
| 24 | | +24V |
| 25 | | PGND |

### 5.28.2.6 IA Module

There are two types of IA Modules available:

- One for normal positions with no volume controls located at the IBOP
- One for split positions with volume controls for the split Jackbox

The non-split IA Module performs the following functions:

- Displays (in the top line) a list of up to 20 calls placed from the position
- Displays (in the second line) a list of up to 20 incoming IA calls waiting to be processed
- Converts the analog volume controls in the IBOP to $I^2C$ messages

In addition, the split IA Module:

- Enables the operator to adjust headset and sidetone audio levels at the split position Jackbox
- Processes the analog levels at the BOP key panel and split IA Module volume controls to digital signals on the $I^2C$ bus to the Position Audio Board
- Enables the operator to adjust the illumination level at the BOP key panel and Speaker Modules at normal and split positions

**Figure 5-74** for a functional block diagram of the unit.

***Input and Output Connections.*** **Table 5-47** lists the input and output connections.

***Table 5-47. IA Module Input and Output Connections***

| J5: (BOP J4) & J6 (Radio Selector J1) | | |
|---|---|---|
| **PIN** | **I/O** | **FUNCTION** |
| 1 | I/O | SDA, $I^2C$ data |
| 2 | I/O | SCL, $I^2C$ clock |
| 3 | | PGND |
| 4 | | PGND |
| 5 | Out | V ref |
| 6 | In | I HDST, Instructor headset |
| 7 | In | T HDST, Trainee headset |

***Table 5-47. IA Module Input and Output Connections (Continued)***

| J5: (BOP J4) & J6 (Radio Selector J1) | | |
|---|---|---|
| **PIN** | **I/O** | **FUNCTION** |
| 8 | | LED ILUM, Speaker LED illumination |
| 9 | In | +24V |
| 10 | In | +24V |
| 11 | In | +24V |
| 12 | In | +24V |
| 13 | | AGND |
| 14 | | PGND |
| 15 | | PGND |
| 16 | | PGND |
| 17 | | PGND |
| 18 | Out | 5Va |
| 19 | In | I STN, Instructor sidetone |
| 20 | In | T STN, Trainee sidetone |
| 21 | Out | BCK ILUM, LCD backlight brightness |
| 22 | In | +24V |
| 23 | In | +24V |
| 24 | In | +24V |
| 25 | | PGND |

The IA Module is functionally similar to the Pot Module described in paragraph 5.28.1.5 except that the IA Module only requires volume controls for the split operator. An additional jack on the IA Module connects the $I^2C$ daisy chain to the Radio and DA Selectors.

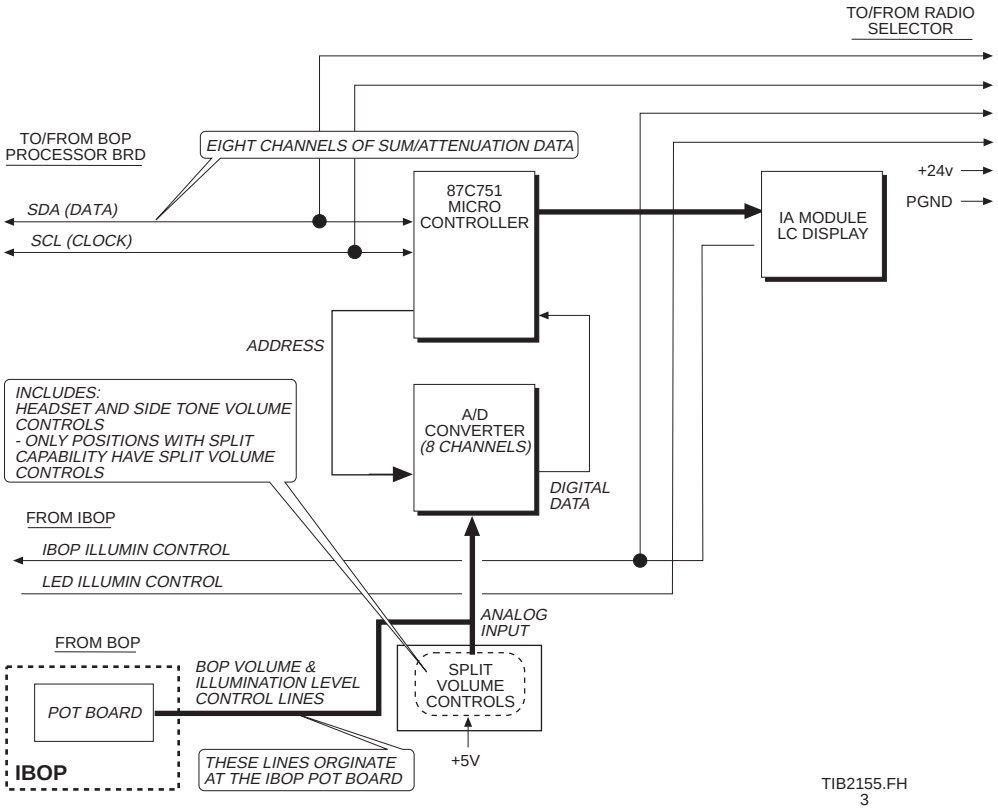


***Figure 5-74. IA Module Functional Block Diagram***

### 5.28.3 Mini-Basic Operator Positions (Type 1)

Mini-BOP positions consist of a:

- Card file
- Mini Basic Operator Panel
- Jackbox
- Speaker Module

Plus at least one:

- Radio Selector

And:

- Direct Access (DA) Selectors as required for additional lines. Mini-BOP consoles use the 35-key version of the DA Selectors

If the position supports the split mode, it requires, in addition, a:

- Jackbox
- Speaker Module
- Split Position Card File (that replaces the card file listed above)

The Mini-BOP positions are hard key positions that occupy less console space than a conventional hard key position. Like the TED positions, they have a card file for much of the position electronics. By accommodating the BOP electronics in the position card file, the panel uses less console space.

A cabling diagram for the Mini-BOP position is provided in **Figure 5-75**.

#### 5.28.3.1 MBOP Position Card File

**Figure 5-76** illustrates the Mini-BOP position card file. Physically identical to the TED card file, it is installed inside the console and contains four (vice five for the TED) cards as follows:

- An $I^2C$ Distribution Board
- A Position Audio Board
- A Jackbox Interface Board
- Single Board Computer

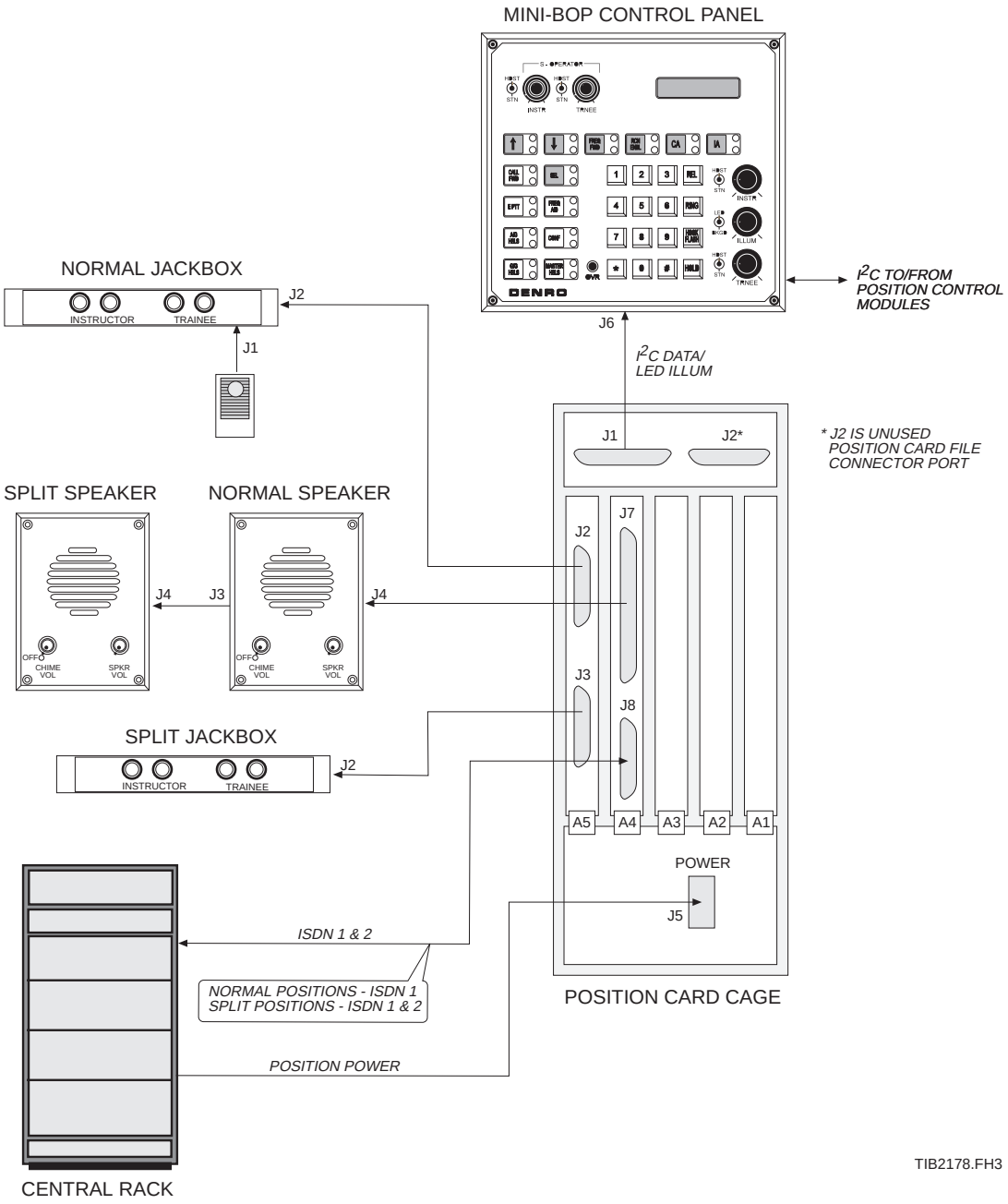


***Figure 5-75. Mini-BOP Position Cabling***

As in the TED card file, the above cards and an internally-mounted hard drive plug into a backplane that distributes power to the boards and interfaces the $I^2C$ Distribution Board, Position Audio Board, and Jackbox Interface with the Single Board Computer via an ISA PC bus. Receptacles mounted on the rear panel provide connection to the central rack and position modules.

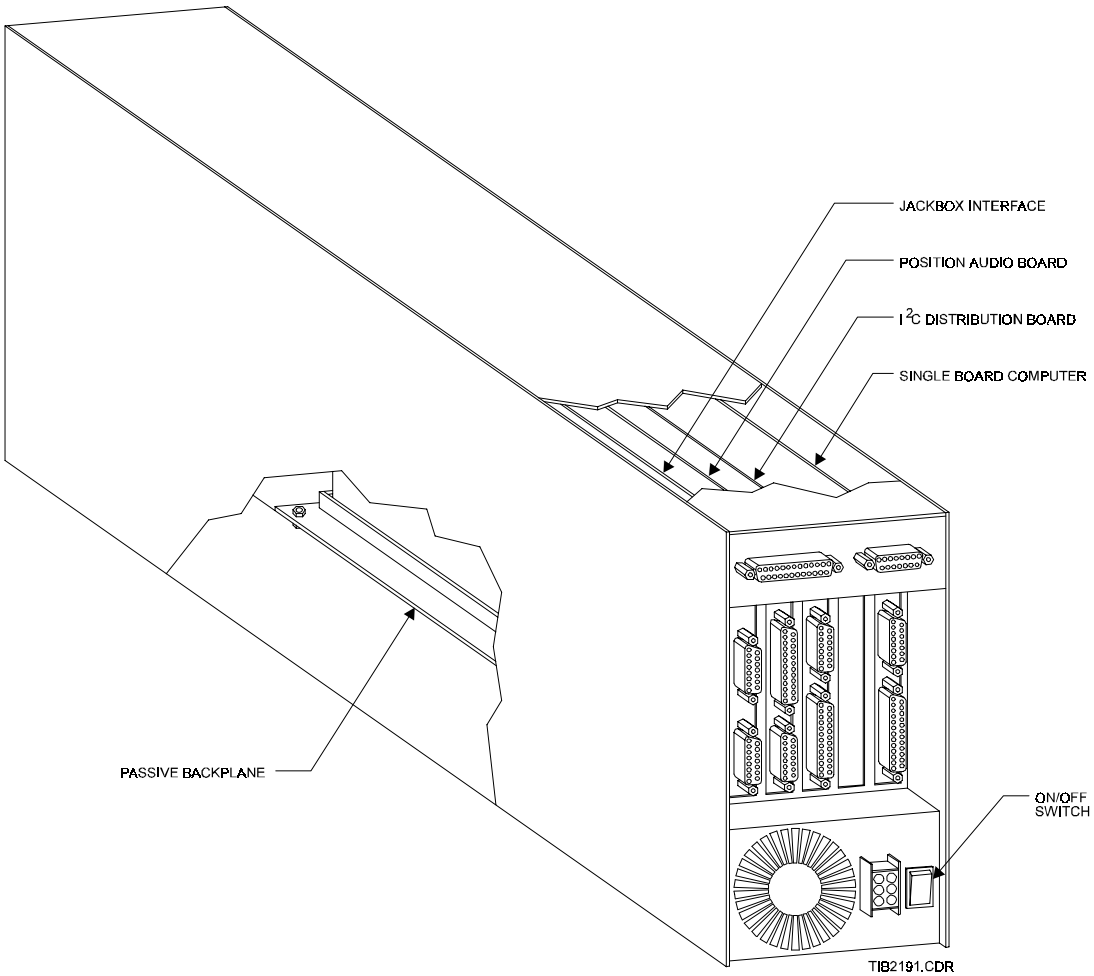


***Figure 5-76. Mini-BOP Position Card File***

The cards installed in the mini-BOP position card file are identical to the same cards installed in the TED position card file. However, the interface provided by the $I^2C$ Distribution Board is a little different as shown in **Figure 5-77.**

As with the TED position card file, this unit contains an ON/OFF switch (as shown in **Figure 5-76**) that controls application of power to the card file circuitry, including the four cards and the hard drive.

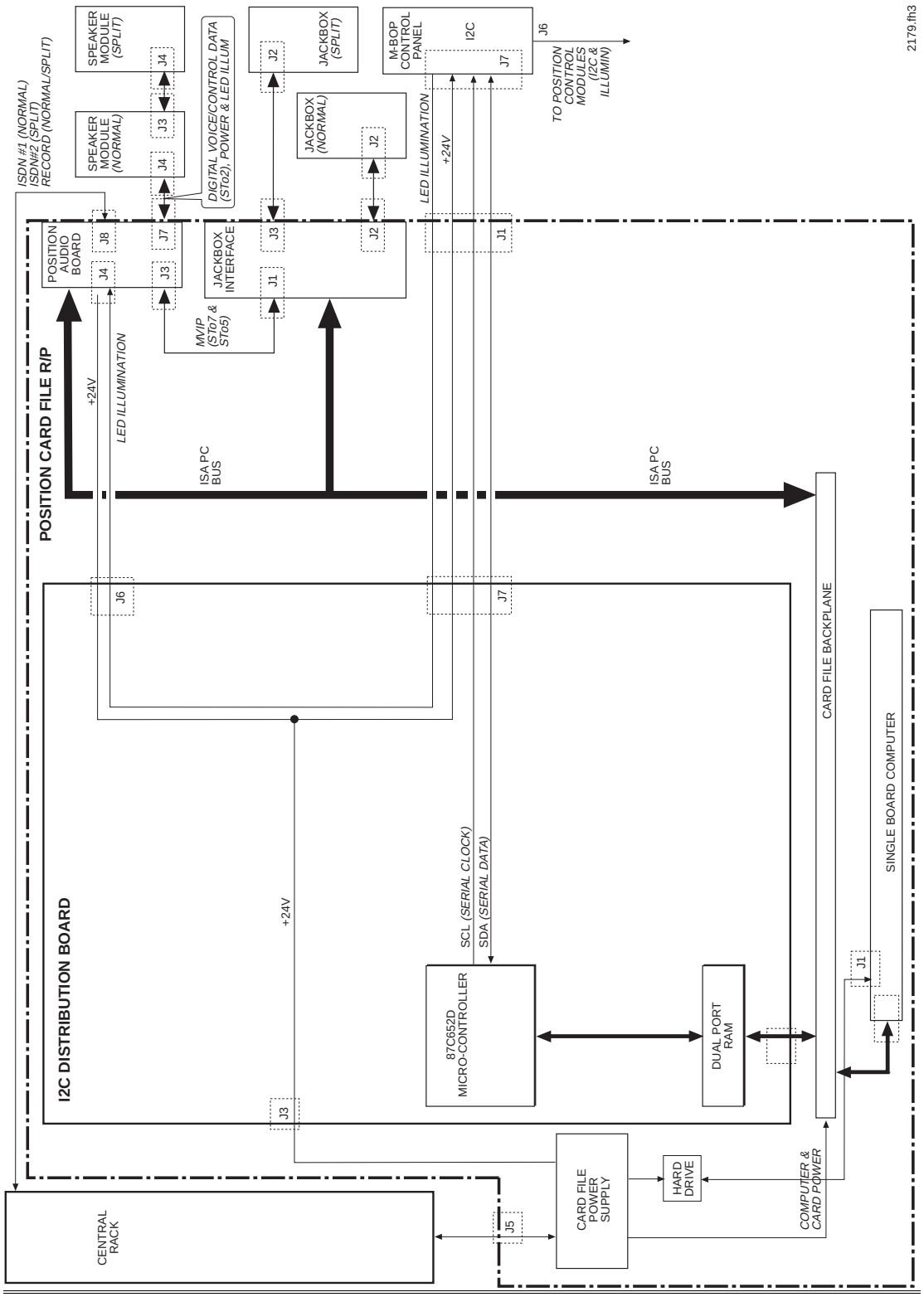


*Figure 5-77. Mini-BOP I²C Distribution Board Interfaces*

With the exception of the video circuits, the MBOP card file (which has no video board) is functionally the same as the TED card file described in paragraph 5.28.1.1.

There are normal and split versions of the MBOP card file.

#### 5.28.3.2 Mini Basic Operator Panel

The Mini-BOP is installed on the console front panel and consists of four sub-assemblies integrated into one module as follows:

- *A key panel* that the operator uses to make voice channel and operator control selections. LEDs located adjacent to each key display current control selections. The membrane-type keys are backlighted and provide tactile feedback when pressed. Nomenclature printed on the surface of each key identifies its function. Refer to Section 3 for further information on the Mini-BOP keypads.

  *Volume and illumination controls* are located to the right of the key panel. They respectively: (1) control headset and sidetone audio at the normal position headset, and (2) control the illumination level at all console key panels.

  *Circuitry in the Caller ID module* converts the levels set at these controls to a digital value. The resultant digital values are applied to the sum and attenuation circuitry on the Position Audio Board.

  If an MBOP supports a normal position, the split volume controls do not function.

- *An Analog-to-Digital with Illumination* circuit assembly that functions identically to the same circuit in the TED position Pot Module but with illumination control to the mini-BOP position selector modules.

**Figure 5-78** illustrates the functional block diagram.

## 5.29 SPEAKER MODULE

The Speaker Module does the following:

- Converts the digital speaker audio from the Position Audio Board to an analog signal that is amplified and applied to the module speaker

- Returns a portion of the analog signal (redigitized) to the Position Audio Board for recording purposes
- Generates the System status chimes
- Provides a daisy chain RS-485 interface to a second Speaker Module at split positions.

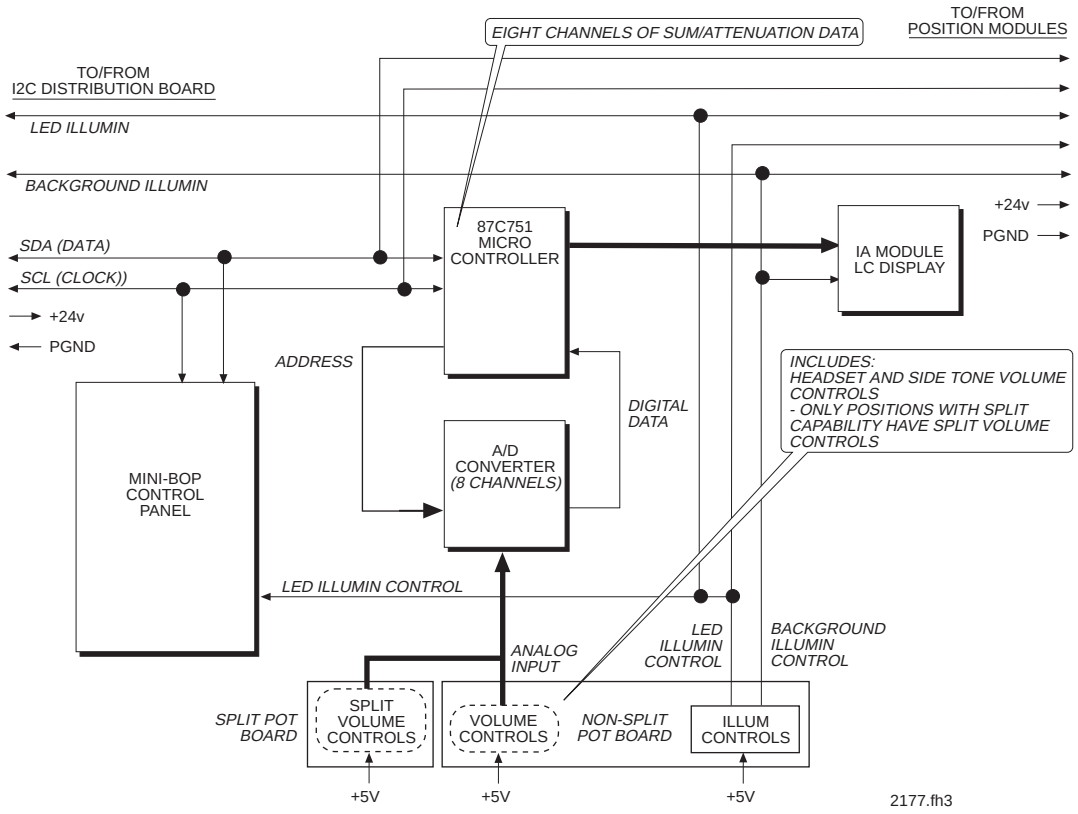


***Figure 5-78. Mini-BOP Functional Block Diagram***

Refer to **Figure 5-79.**

Both the TED and hardkey positions use the same Speaker Module assembly. At split positions, each operator has a Speaker Module.

***Input and Output Connections.*** **Table 5-48** lists the input and output connections.

***Table 5-48. Speaker Module Input and Output Connections***

| J4: (TED J8; BOP J6) | | |
|---|---|---|
| **PIN** | **I/O** | **FUNCTION** |
| 1 | I/O | N/C |
| 2 | In | N/C |
| 3 | | PGND |
| 4 | | PGND |
| 5 | In | +4C, 4.096-MHz clock (+) |
| 6 | In | +FR, Sys frame pulse (+) |
| 7 | In | +STO2, Voice data (+) |
| 8 | Out | +STI2, Record data (+) |
| 9 | In | LED ILUM, Level from Pot Module |
| 10 | In | +24V |
| **J4: (TED J8; BOP J6)** | | |
| **PIN** | **I/O** | **FUNCTION** |
| 11 | In | +24V |
| 12 | In | +24V |
| 13 | | PGND |
| 14 | | PGND |
| 15 | | PGND |
| 16 | | PGND |
| 17 | | PGND |
| 18 | In | -4C, 4.096 MHz clock (-) |
| 19 | In | -FR, Sys frame pulse (-) |
| 20 | In | -STO2, Voice data (-) |
| 21 | Out | -STI2, Record data (-) |
| 22 | In | +24V |
| 23 | In | +24V |
| 24 | In | +24V |
| 25 | | PGND |

J1 is for factory use. J2 is used internally. J3 connects to a split Speaker Module if configured and J4 connects to the Position Audio Board.

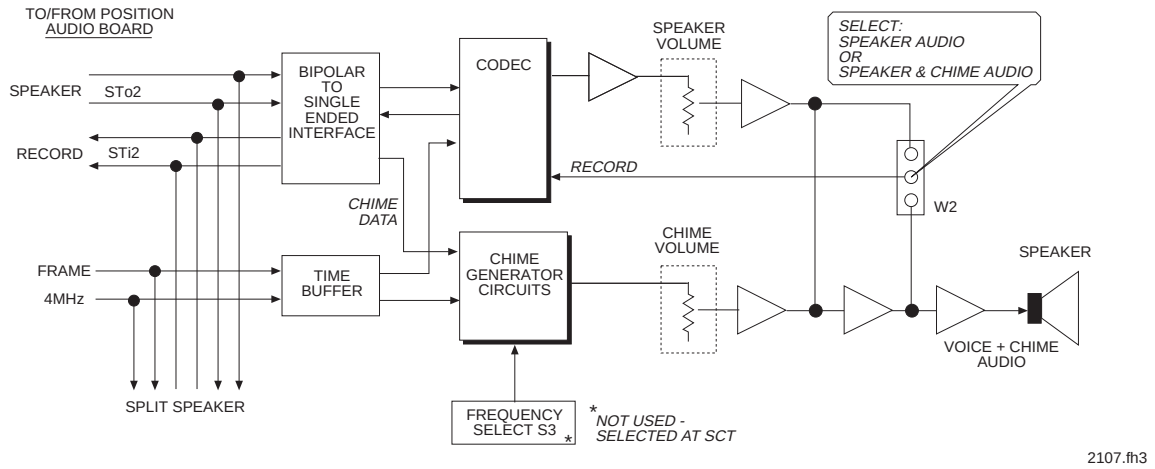


***Figure 5-79. Speaker Module Functional Block Diagram***

***Speaker Module Strapping.*** Before installing the module in the position console, ensure the correct strapping is installed as defined in **Table 5-49**.

***Table 5-49. Speaker Module Board Strapping***

| JUMPER | PURPOSE | STRAPPING |
|---|---|---|
| S3* | Chime Select (SW controlled) | 1-3 Open |
| | Unused | 4-5 Open |
| | Speaker channel select (non-select) | 6-7 Open |
| | Speaker channel select (split) | 8 closed |

* Switch setting

NOTE

W1, W2, S1, and S2 are internal to the unit; the jumpers are set at the factory and there is no need for adjustment at the site.

***Voice Streams.*** Whether the position has one or two speakers, ST2 carries the data between the Speaker Module and the Position Audio Board. Each speaker picks the appropriate channels off the STo2 stream. If speaker audio is to be recorded, a record audio signal is returned from the output of the speaker amplifier to the Position Audio Board on Sti2.

## 5.30 JACKBOX

Non-split positions have a single jackbox. Split positions have two jackboxes. Each jackbox provides a headset connection for the Instructor and Trainee. If a headset is not plugged into one of the jacks, the position will not operate. **Figure 5-80** illustrates the front panel of the jackbox. The operator may also use a footswitch to execute PTT functions. The footswitch plugs into the rear panel of each jackbox. Refer to paragraph 5.31 for a rear panel view.

***Figure 5-80. Jackbox Front Panel***

## 5.31 POSITION UNIT INTERFACE

This paragraph includes a rear panel illustration of all console panel units as follows:

- Touch Entry Display (**Figure 5-81**)
- Integrated Basic Operator Position panel (**Figure 5-82**)
- Mini-basic Operator Position panel (**Figure 5-83**)
- IA Module (**Figure 5-84**)
- Speaker Module (**Figure 5-85**)
- Pots Module (**Figure 5-86**)
- Jackbox (**Figure 5-87**)
- Radio Selector (**Figure 5-88**)
- DA Selector (20 key) (**Figure 5-89**)
- DA Selector (35 key) (**Figure 5-90**)
- Programmable DA Selector (**Figure 5-91**)

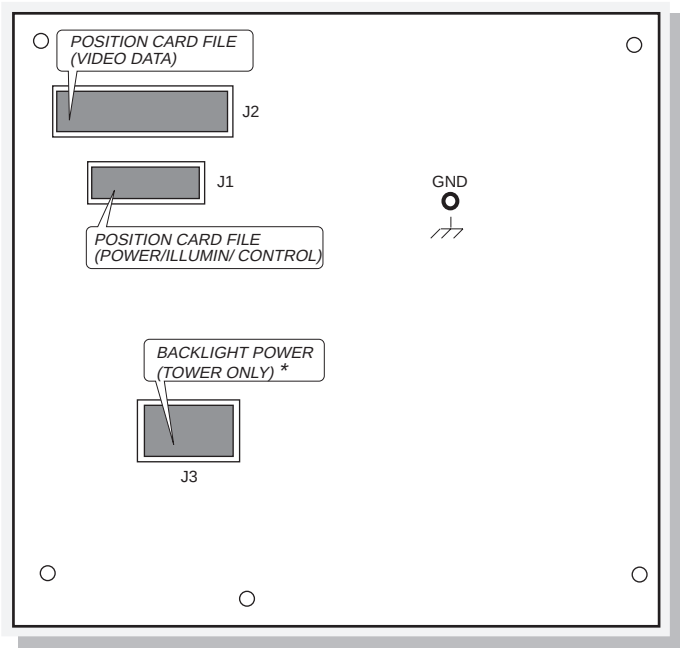


* TRACON HAS NO J3 CONNECTOR (POWER IS RECEIVED THROUGH J1)

21A27.FH3

***Figure 5-81. TED Rear Panel***

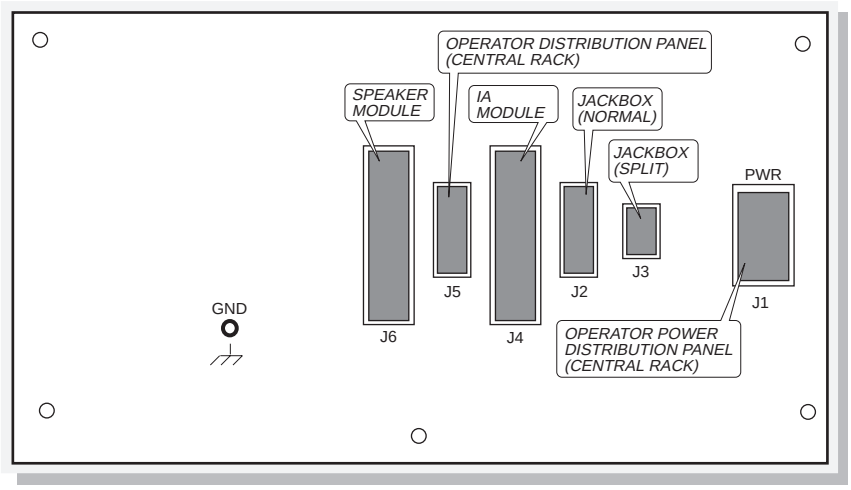


21A23.FH3

***Figure 5-82. IBOP Rear Panel***

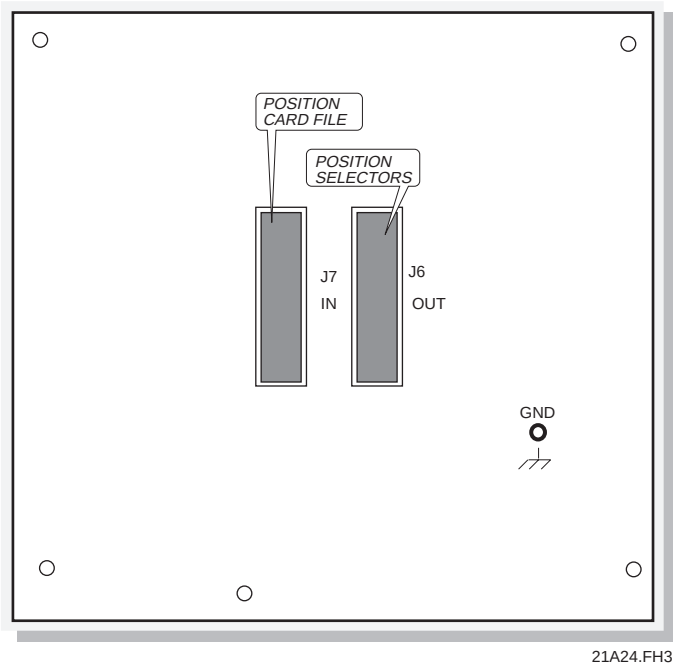


***Figure 5-83. MBOP Rear Panel***

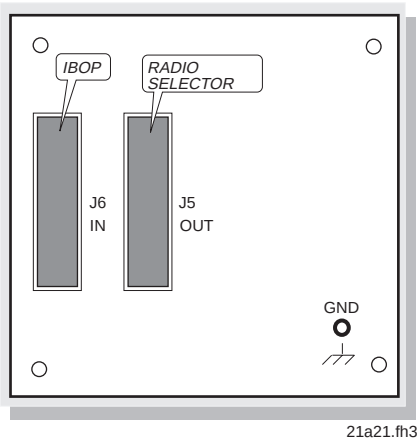


***Figure 5-84. IA Module Rear Panel***

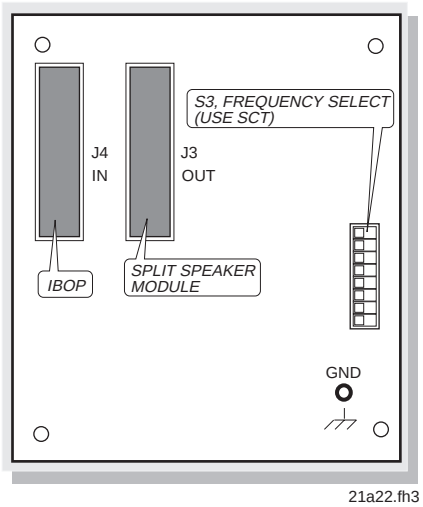


*Figure 5-85. Speaker Module Rear Panel*

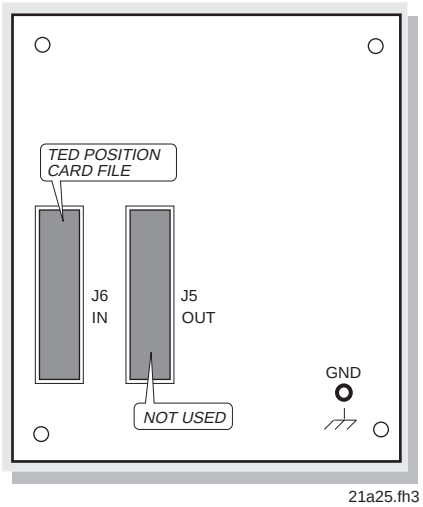


*Figure 5-86. Pots Module Rear Panel*

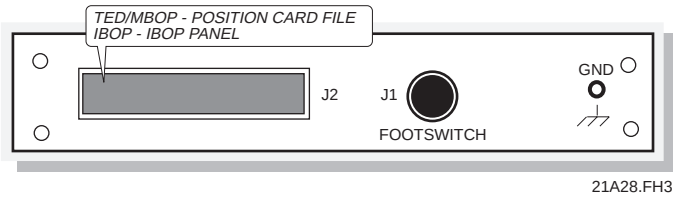


*Figure 5-87. Jackbox Rear Panel*

Each illustration includes ground and connector location, interface information, background illumination potentiometers, and $I^2C$ bus addressing switches, as applicable.

The following units have addressing switches:

- Radio Selectors
- DA Selectors (20- and 35-key)
- Programmable DA Selectors

The addressing switch is a rotary hex switch that is accessible through the rear cover and set using a tuning tool. Each unit listed above receives an $I^2C$ address at installation. When replacing console units, it is necessary to set the address of the replacement unit to match that of the unit being replaced. The order of units on the bus is IBOP, IA Module, Radio Selectors, and DA Selectors.

There is a second addressing switch that is set at the factory and must not be changed. This switch is not accessible except by removing the rear cover. It defines the function of the unit as a radio selector, DA selector, or programmable DA selector.

A backlight adjustment is available on the following units:

- Radio Selectors
- Programmable DA Selectors

Both these units have LCD displays. The potentiometer, accessible through the rear cover, adjusts the backlight level of the display.

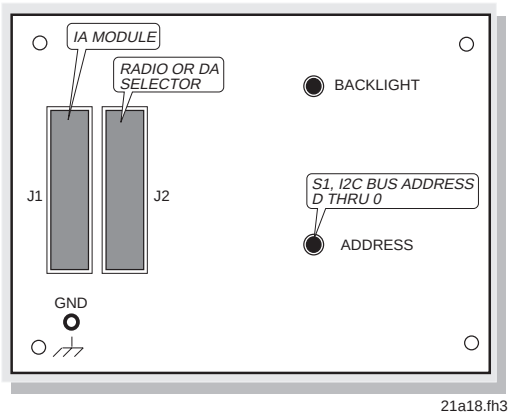


***Figure 5-88. Radio Selector Rear Panel***

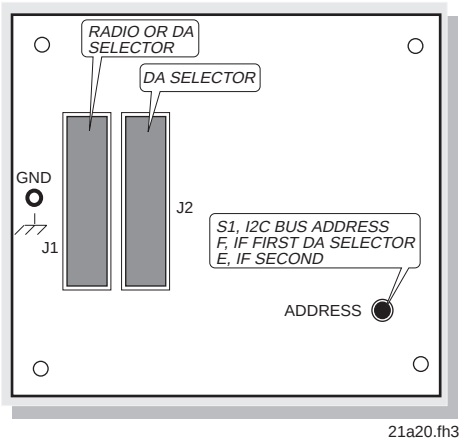


***Figure 5-89. DA Selector (20-key) Rear Panel***

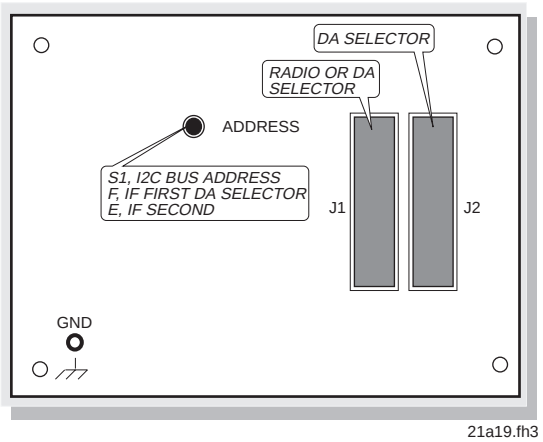


***Figure 5-90. DA Selector (35-key) Rear Panel***

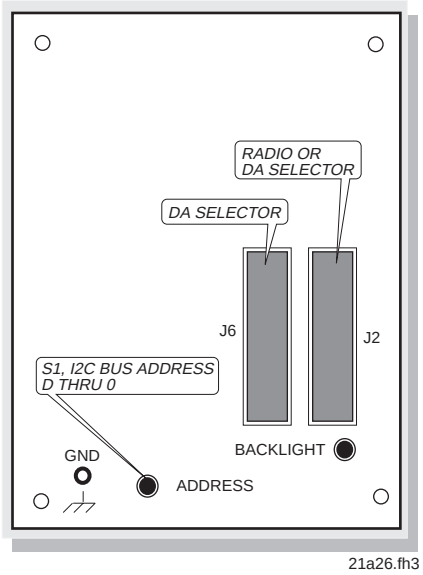


***Figure 5-91. Programmable DA Selector***

## 5.32 REMOTE POSITION INTERFACE UNIT

The ISDN link between the Operator Processors and the local position equipment uses an ISDN-S communication format. However, ISDN-S can only be used for links up to 500 feet long. To link remote positions greater than 500 feet from the Operator Processor, the system uses the ISDN-U format. ISDN-U can support a link up to 15,000 feet long. The Remote Position Interface Unit (RPIU) interfaces an ISDN-U link with the ISDN-S ports at the central rack and position equipment. It is illustrated in **Figure 5-92**.

Each link requires two RPIUs, one at each end of the ISDN-U link. The unit design ensures the units are installed in the correct direction at either end by using male/female cable connector matching. At the local end, the RPIU receives power from the central rack; at the remote end, the position equipment supplies the RPIU with power. The Local RPIUs install on a shelf in the central rack. The remote unit installs in the console.

Four versions of the RPIU are available: two to interface normal positions requiring a single ISDN link and two to support split positions requiring dual ISDN links. They must be installed as follows:

a) For remote normal positions:
   - 110956-003—Local end; requires alignment
   - 110956-004—Remote end; set PRI potentiometer fully clockwise (25 turns)

b) For remote split positions:
   - 110956-001—Local end; requires alignment
   - 110956-002—Remote end; set PRI and SEC potentiometers fully clockwise (25 turns)

Refer to Section 6 for RPIU alignment procedures.

To accommodate the record audio lines, the RPIUs amplify the record audio carried by analog lines contained by the ISDN cabling. A relay, controlled by a voltage sense circuit, identifies at which end of the link the RPIU resides and switches audio through the amplifiers accordingly.

An on-board micro-controller manages traffic through the ISDN-S and ISDN-U interface chips and illuminates front panel indicators to show current data flow activity.

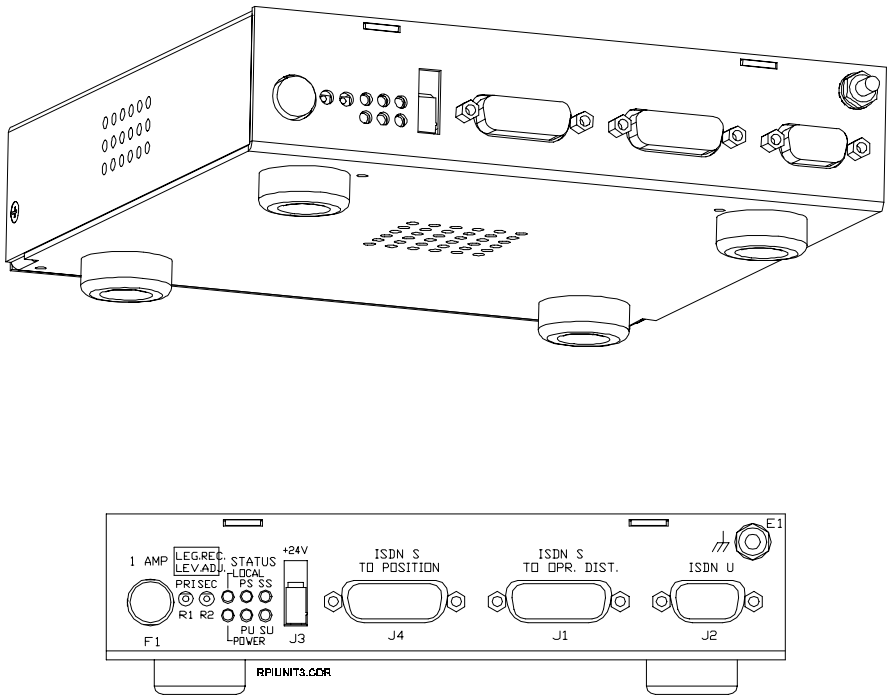


***Figure 5-92. Remote Position Interface Unit and Front Panel***

**Table 5-50** lists front panel controls and indicators.

***Table 5-50. Remote Position Interface Unit Controls and Indicators***

| NOMENCLATURE | FUNCTION |
|---|---|
| LOCAL | Indicates that the RPIU is connected as a local device. |
| POWER | Indicates that +24V power is applied to the RPIU. |
| PS | (ISDN-S Primary) Indicates an active link |
| PU | (ISDN-U Primary) Indicates an active link |
| SS | (ISDN-S Secondary) Indicates an active link |
| SU | (ISDN-U Secondary) Indicates an active link |
| R1 PRI | Primary legal record level adjust potentiometer |
| R2 SEC | Secondary legal record level adjust potentiometer |

***Input and Output Connections.*** All input and output connections are made at the front panel. **Table 5-51** lists the I/O connections. Secondary connections are used only on split position RPIUs.

***Table 5-51. Remote Position Interface Unit Input and Output Connections***

| Pin | Function |
|---|---|
| ***J1, Central Rack (ISDN-S) + Power:*** | |
| 1 | RCRD1 (P), Primary record audio 1 |
| 2 | RX1 (P), ISDN-S primary receive 1 |
| 3 | TX1 (P), ISDN-S primary transmit 1 |
| 4 | RCRD1 (S), Secondary record audio 1 |
| 5 | RX1 (S), ISDN-S secondary receive 1 |
| 6 | TX1 (S), ISDN-S secondary transmit 1 |
| 7 | PGND |
| 8 | +24V (Local/remote sense) |

***Table 5-51. Remote Position Interface Unit Input and Output Connections (Continued)***

| Pin | Function |
|---|---|
| 9 | RCRD2 (P), Primary record audio 2 |
| 10 | RX2 (P), ISDN-S primary receive 2 |
| 11 | TX2 (P), ISDN-S primary transmit 2 |
| 12 | RCRD2 (S), Secondary record audio 2 |
| 13 | RX2 (S), ISDN-S secondary receive 2 |
| 14 | TX2 (S), ISDN-S secondary transmit 2 |
| 15 | PGND |
| ***J2, ISDN-U Link Cable:*** | |
| 1 | RCRD1 (P), Primary record audio (analog) |
| 2 | U1 (P), Primary TX/RX ISDN-U line |
| 3 | RCRD1 (S), Secondary record audio (analog) |
| 4 | U1 (S), Secondary TX/RX ISDN-U line |
| 5 | Not used |
| 6 | RCRD2 (P), Primary record audio (analog) |
| 7 | U2 (P), Primary TX/RX ISDN-U line |
| 8 | RCRD2 (S), Secondary record audio (analog) |
| 9 | U2 (S), Secondary TX/RX ISDN-U line |

***Table 5-51. Remote Position Interface Unit Input and Output Connections (Continued)***

| Pin | Function |
|---|---|
| ***J3, Auxiliary Power Input (+24V DC)*** not used | |
| 1 | PGND |
| 2 | +24V |
| ***J4, Position Equipment (ISDN-S) + Power:*** | |
| 1 | RCRD1 (P), Primary record audio 1 |
| 2 | RX1 (P), ISDN-S primary receive 1 |
| 3 | TX1 (P), ISDN-S primary transmit 1 |
| 4 | RCRD1 (S), Secondary record audio 1 |
| 5 | RX1 (S), ISDN-S secondary receive 1 |
| 6 | TX1 (S), ISDN-S secondary transmit 1 |
| 7 | PGND |
| 8 | +24V |
| 9 | RCRD2 (P), Primary record audio 2 |
| 10 | RX2 (P), ISDN-S primary receive 2 |
| 11 | TX2 (P), ISDN-S primary transmit 2 |
| 12 | RCRD2 (S), Secondary record audio 2 |
| 13 | RX2 (S), ISDN-S secondary receive 2 |
| 14 | TX2 (S), ISDN-S secondary transmit 2 |
| 15 | PGND |

***Remote Position Interface Unit Strapping.*** There is no strapping for the Remote Position Interface Unit.

The transmit and receive designations shown in the functional block diagram of **Figure 5-93** are shown in reference to the position.

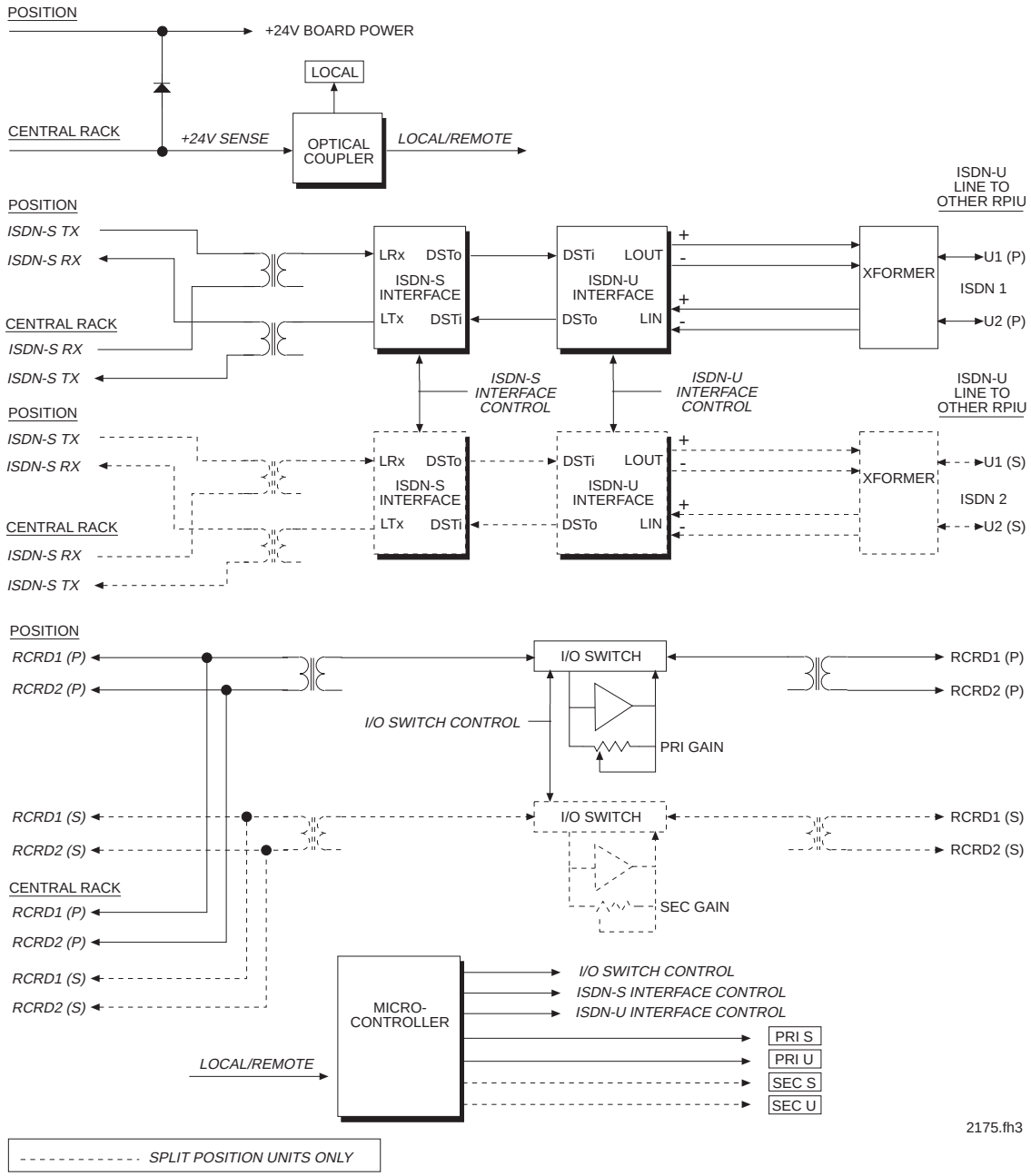


***Figure 5-93. Remote Position Interface Unit Functional Block Diagram***

## 5.33 SUPERVISORY RECORD INTERFACE

At the SCT, the supervisor can select any two position record channels to be picked off the voice data bus by the Operator Processor (Supervisory Record) card and routed, via an ISDN link, to the Supervisory Record Interface. The Supervisory Record Interface processes the two position record channels on the ISDN link from the Operator Processor (Supervisory Record) card and outputs the record audio signals to recorders located at the supervisor's position.

***Front Panel Controls and Indicators.*** There are no front panel controls and indicators.

***Input and Output Connections.*** All input and output connections are made at the front and rear panels. **Figure 5-94** illustrates the I/O connections on the front and rear panels.

**Table 5-52** lists the I/O connections on each panel.

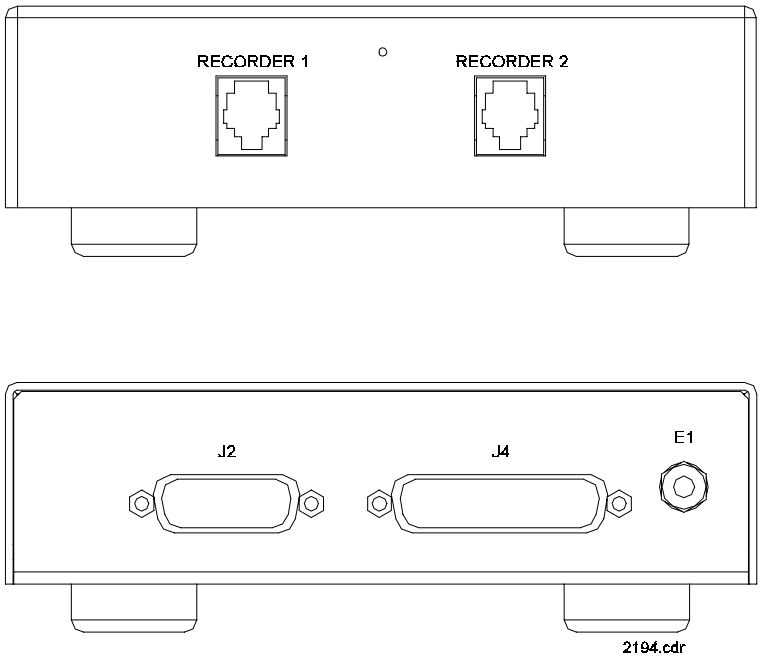


***Figure 5-94. Supervisor Record Interface Front and Rear Panels***

### *Table 5-52. Supervisory Record Interface Input and Output Connections*

| Pin | Function |
|---|---|
| ***J1, Record 1 to Recorder:*** | |
| 1 | +6.2 V, recorder 1 power |
| 2 | AUD1+, position audio 1 |
| 3 | AUD1-, position audio 1 |
| 4 | VOX1+, recorder VOX 1 |
| 5 | VOX1-, recorder VOX 1 |
| 6 | GND |
| ***J2, ISDN from Operator Processor (Supvr Rcrd)*** | |
| 1 | No connection |
| 2 | RX1, digital audio position 1 & 2 in. |
| 3 | TX1, not used |
| 4-9 | No connection |
| 10 | RX2, digital audio position 1 & 2 in. |
| 11 | TX2, not used |
| 12-15 | No connection |
| 16 & 17 | Chassis ground 2 |
| ***J3, Record 2 to Recorder:*** | |
| 1 | +6.2 V, recorder 2 power |
| 2 | AUD1+, position audio 2 |
| 3 | AUD1-, position audio 2 |
| 4 | VOX1+, recorder VOX 2 |
| 5 | VOX1-, recorder VOX 2 |
| 6 | GND |
| ***J4, Power:*** | |
| 1 & 2 | No connection |
| 3 & 4 | Power ground |
| 5-9 | No connection |
| 10-12 | +24V |
| 13 & 14 | No connection |
| 15-17 | Power ground |
| 18-21 | No connection |
| 22-24 | +24V |
| 25 | Power ground |

As shown in **Figure 5-95,** the SNIC interfaces the ISDN link with the unit circuitry. The digital audio component of the ISDN RX signal is output by the SNIC to two codecs at DSTo. One codec processes position audio from one position selection for the record 1 signal path and the other codec processes the second position audio selection for the record 2 signal path.

Each path supplies record audio to a separate recorder. A VOX circuit in each signal path controls the recorder connected to the path. The recorder is activated when audio is present. The threshold is not adjustable. An optical coupler isolates the unit's VOX circuitry from the recorder control loop. An NPN transistor controls the record control loop.

## 5.34 MAINTENANCE SPEAKER PANEL

In addition to the Speaker Module of the rack-mounted maintenance position equipment, a Maintenance Speaker Panel (illustrated in **Figure 5-96**) is installed in the rack below the maintenance position equipment. The panel mounts an audio amplifier and speaker with volume control (minimum/maximum) that is independent of the maintenance position speaker. The panel also has a POWER ON/OFF switch.

A front panel jack (labeled AUDIO INPUT) accepts audio signals. This jack can be patched from the front panel of the Maintenance Access unit, or another interface or processor unit, to be monitored at the speaker. The panel receives its power from the System Alarm Panel.

## 5.35 SUPERVISOR POSITION PRINTER

Each supervisor and maintenance control position has a dot matrix printer. It is cabled to the printer port of the position configuration terminal. The supervisor can print out any data base files available across the LAN. The printer is normally set up to print out events added to the Maintenance Log as they occur. Refer to the vendor documentation for most operational details and printer maintenance.

This model KX-P1150 multi-mode printer is powered by an UPS unit (AC power source). The printer is plugged into a grounded, 3-prong AC socket in the back of the UPS. A six-foot-long parallel interface cable assembly (P/N 600047-001) connects the unit to the printer port on the back of the workstation CPU (e.g., MCT CPU). **Figure 5-97** shows the method used for connecting the printer. The connector end to the printer is secured by printer clips (by captive thumbscrews on the DB25 male plug end).

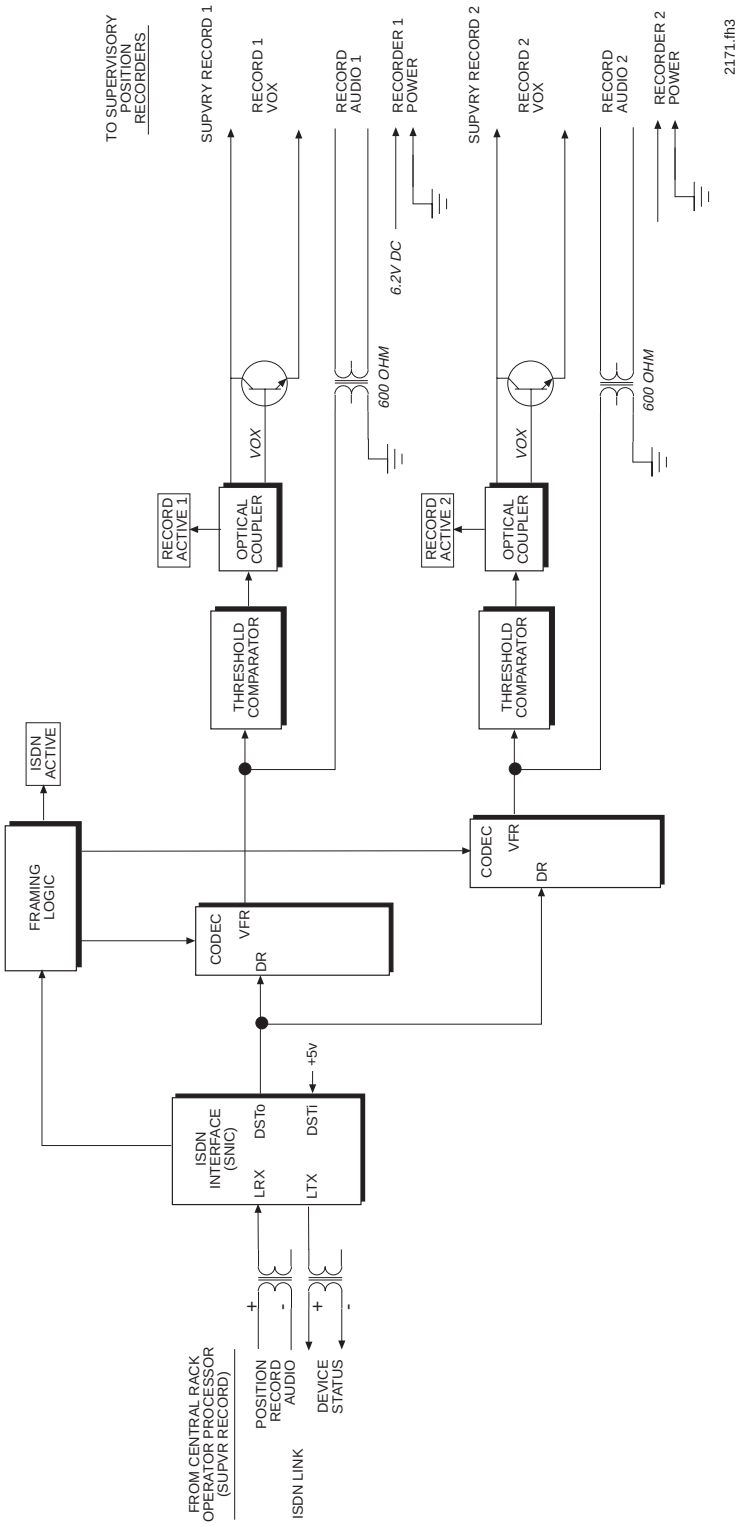


*Figure 5-95. Supervisor Record Interface Functional Block Diagram*

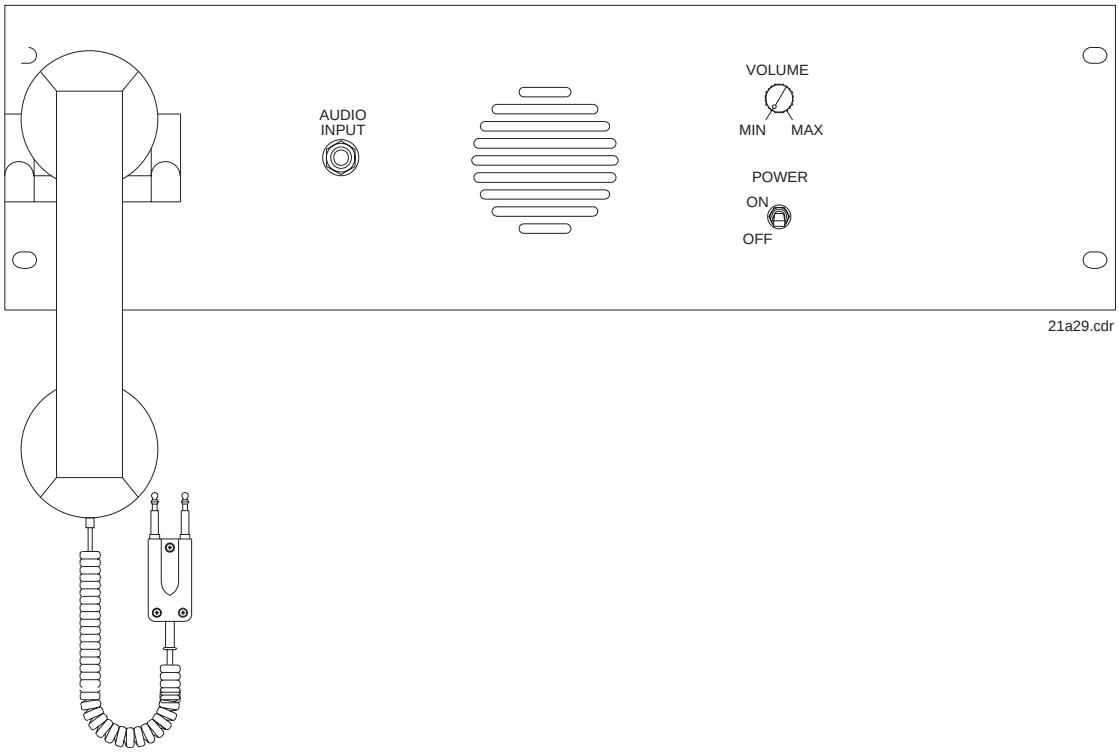


***Figure 5-96. Optional Maintenance Speaker Panel Front Panel***

NOTE

Handset and hanger are optional items.

**Figure 5-97** also shows several of the most important printer controls and indicators, including the POWER ON/OFF indicator, which is located on the right-hand side of the unit. The LOAD/PARK switch/indicator enables automatic loading of paper to the first print line; the ON LINE switch/indicator is pressed to ready the unit for printing. Refer to the *SCT User Manual* for details and procedural steps on how to set up and configure the printer for system operation. Refer to the vendor's documentation for a complete description of all printer capabilities and features and use of all the various controls and indicators.

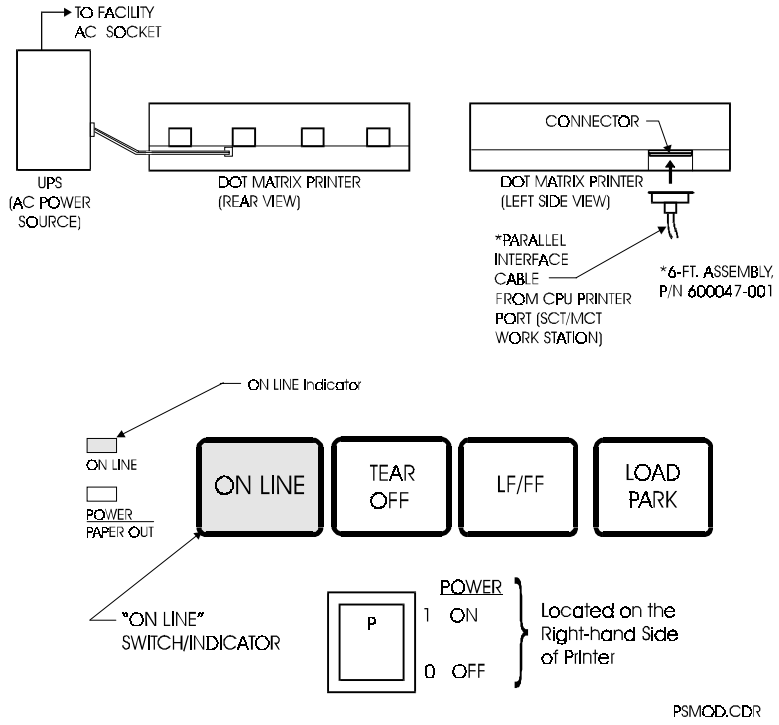


*Figure 5-97. SCT/MCT Printer*

## 5.36 SUPERVISORY RECORDERS

Two standard cassette recorders, located at the supervisor's position, enable the supervisor to record audio activity monitored at any two positions. VOX circuits in each channel of the Supervisory Record Interface unit activate the recorders when voice is present in the associated channel. They have conventional recorder operator button functions and flip up cassette loading. They receive power from the Supervisory Record Interface. Refer to the vender documentation for operational details.

For actual system use of cassette controls and operation of the Supervisory Recorders (two per interface unit), see paragraph 3.6; for recorder installation and removal, see paragraph 6.5.17, which also provides additional information for setting up the unit to operate.

## 5.37 SELECTOR MODULES

Four types of selector modules can be installed at hardkey positions as follows:

- Radio Selector
- DA Selector (20 key)
- DA Selector (35 key)
- Programmable DA Selector

Because IBOPs and MBOPs do not have radio keys, Radio Selectors must be used at all hardkey positions that control radio channels. **Figure 3-17** illustrates a Radio Selector front panel, **Table 3-2** describes the key functions and **Table 3-3** the key attributes.

If the position requires more DA keys than those provided by the IBOP or MBOP, additional DA Selectors are installed to provide the additional keys. **Figures 3-16** and **3-18** illustrate the DA Selector front panels. **Table 3-2** and **3-3** list key functions and attributes.

Functionally all the selector modules are the same, except the radio and programmable DA selectors have LCD displays. The LCD circuitry is not populated on 20 and 35 key DA Selectors.

**Figure 5-98** illustrates a functional block diagram of the selector circuitry. There are three basic functional elements to the module circuitry; (i) an LCD display that shows the frequency controlled by each set of keys at radio selectors, or the telephone line accessed by each key at a Programmable DA Selector; (ii) key indicators that provide key command status, and (iii), a key matrix. A microcontroller manages all three elements as well as $I^2C$ bus message I/O.

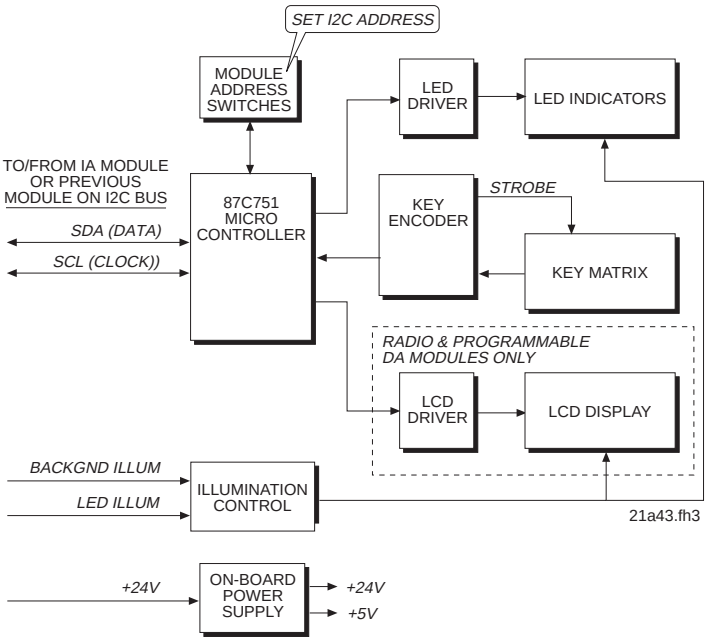


***Figure 5-98. Selector Modules Block Diagram***

When an operator presses a key, the selection is encoded at the selector module and sent, via the position electronics, to the Operator Processor where the association between the key selected and its command occurs. While the command is acted on by the appropriate processors in the system, status messages associated with it are returned to the Operator Processor. The Operator Processor forwards the status messages to the position electronics where it is routed over the $I^2C$ bus to the required selector module at which the microcontroller applies the message to the indicator LEDs.

At position reconfiguration, the Operator Processor sends the LCD display data to the position electronics which in turn sends the data over the $I^2C$ bus to the Radio and Programmable DA Selectors where the radio frequency and phone line identification information is displayed at the LCDs.

Potentiometers at the IBOP, MBOP and IA Module control the illumination level of the LEDs and key background by adjusting the bias on the output transistors of the illumination control circuitry. These potentiometers supply bias level across additional lines in the $I^2C$ bus cable for the purpose. They pass through each module to the next on the bus.

## 5.38 TRANSIENT SURGE PROTECTOR (OPTIONAL)

In addition to the lightning protection provided by the customer's site facilities to the communications lines entering the demarc, DENRO also includes surge suppression circuitry on each telephone communications line connected to the system. The communications lines from the demarc connect to the telephone card cage backplane via surge protection circuit cards. Each card provides independent suppression circuits for the telephone lines connected through it. The circuit cards are installed in a rack adapter chassis that can hold up to 12 cards. Cables from the demarc connect at male connectors on each card. Cables to the card cage connect at the female connectors of the cards. The rack adapter chassis resides at the base of the telephone racks and can be accessed through the rear door.

The surge protector cards come in two sizes as follows:

- 50-line device; part no. 120611-001 (25 pair)
- 32-line device; part no. 120611-002 (16 pair)

Unless the transient surge protector has been damaged, the active component of the suppression circuitry will automatically restore the device to its normal state after transient voltage levels drop to within safe limits. Ground leads on each card, connected to spade lugs on the rack adapter chassis, conduct the high transient energy to ground through the central rack ground lines.

For specific information on how to trace telephone circuits to their associated transient surge protectors, refer to paragraph 6.4.9.1.

## 5.39 THERMOSTAT, NORMALLY OPEN, 160°F

This switch assembly is operated by a bi-metal disk and is used in each rack assembly to provide a rack overheat indication when rack internal temperature reaches 160°F (70°C). This normally-open, disk-operated thermostat has a temperature range of 130°F (bottom temperature/reset) to 160°F (top temperature).

This thermostat (and associated overheat lamp assembly) is located at the top of each rack. The switch is part of a central rack overheat loop that includes the alarm unit card, position fuse panel, system alarm panel, remote alarm panels, parallel control processor card, relay activator card, and SCT (these components are discussed in other parts of Section 5).

The switch supplies a ground state alarm signal to the system overtemperature alarm network; the signal triggers an alarm indication at the System Alarm Panel (OVERHEAT indicator lights RED). The +24 VDC and RTN lines interface the rack overheat indicator circuitry and System Alarm Panel, and the rack assembly indicator is turned on upon activation of the ground state alarm signal.

When the rack temperature reaches 160°F (70°C), the normally-open contacts close, producing the signal that triggers the overheat alarms. The switch is not adjustable and thus is almost tamper-proof.

Electrical characteristics of the switch are as follows:

Contact Arrangement ..... SPST
..... Normally Open (NO)
Type Contact ..... SPST Single Break
Tolerance ..... ±5°F
Reset Differential (max) .....30°F
Rating.....125 VAC
.....250 VAC
Current-Resistive Load ..... 15 Amps @ 120 VAC, or
10 Amps @ 240 VAC

# SECTION 6.

# MAINTENANCE

## 6.1 INTRODUCTION

This section contains recommended scheduled (preventive) maintenance procedures, a troubleshooting guide, and corrective maintenance instructions (basically removal, replacement, and alignments). Scheduled maintenance is performed on certain key equipment to keep it in proper working order and thus keep interruptions in service to a minimum.

The system must stay in operation at all times, under all possible conditions, to maintain integrity and security in the air traffic control (ATC) space. Therefore, the corrective maintenance philosophy is based on the concept of continuation of the ATC service, which requires identification, isolation, and correction of faults in a minimum period of time. On-site corrective maintenance is limited to the isolation of a fault to an LRU and the replacement of that unit.

NOTE

This equipment contains semiconductor devices/integrated circuits (ICs) that are susceptible to electrostatic discharge. Refer to precautionary instructions in paragraph 6.2 before attempting service.

## 6.2 ELECTROSTATIC DISCHARGE (ESD) PRECAUTIONS

The circuit cards used in the central equipment and in the positions are composed primarily of semiconductor devices that are subject to damage by ESD if the circuit cards are not properly protected and handled. This is particularly true for devices composed of complimentary metallic oxide (CMOS), but also applies to other semiconductor devices.

Simply touching an equipment frame to momentarily ground oneself may provide static-safe conditions in some cases, but is not fail-safe. Only the use of conductive

floor mats, wrist straps, and shoe straps can ensure that personnel are reliably grounded.

Conductive floor mats should be used to ensure that personnel are reliably grounded to earth ground. As shown in **Figure 6-1**, the mats (or floor runners) should be placed immediately in front of all equipment racks and other areas where personnel are not at a sit-down work space and it is impractical to wear a grounded wrist strap. Rubber and plastic soled shoes should **not** be worn without a grounding strap. Leather soles are recommended since these have a relatively low resistance that allows maintenance personnel to be adequately grounded. Suitable arrangements should be made to attach a grounding cord to the equipment rack. A typical example is shown in **Figure 6-1**, with the cord attached by an alligator clip to a grounding post on the ESD Panel.

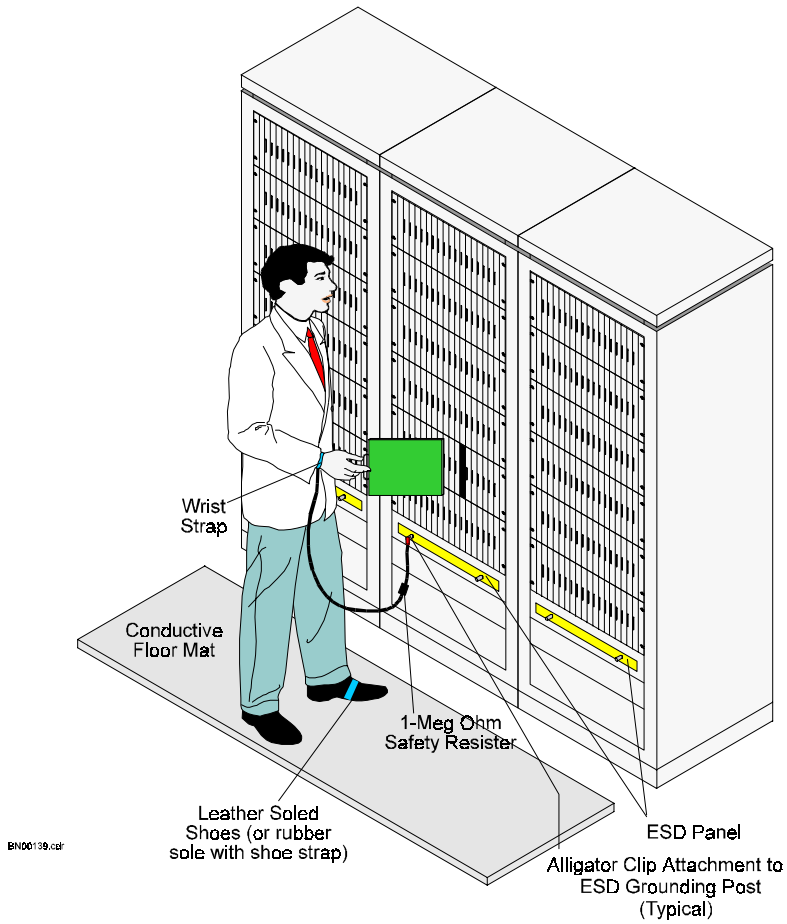


***Figure 6-1. Static-Safe LRU Replacement, Typical Setup***

All work-bench personnel handling ESD-sensitive devices should be grounded with a wrist strap. The strap should be attached to the work surface through a 1-megohm resistor as shown in **Figure 6-2**; most wrist straps have a built-in resistor.

NOTE

Circuit cards and ICs are shipped from the factory in conductive static shielding bags. The bags and tubes are reusable and should be retained for storage/shipment purposes.

If wrist straps and conductive floor mats are not used, maintenance personnel should ground themselves by touching the equipment frame before removing/installing a circuit card. Although this procedure does not guarantee protection against ESD, it may be useful in reducing the possibility of damage to circuit components under severe static conditions.

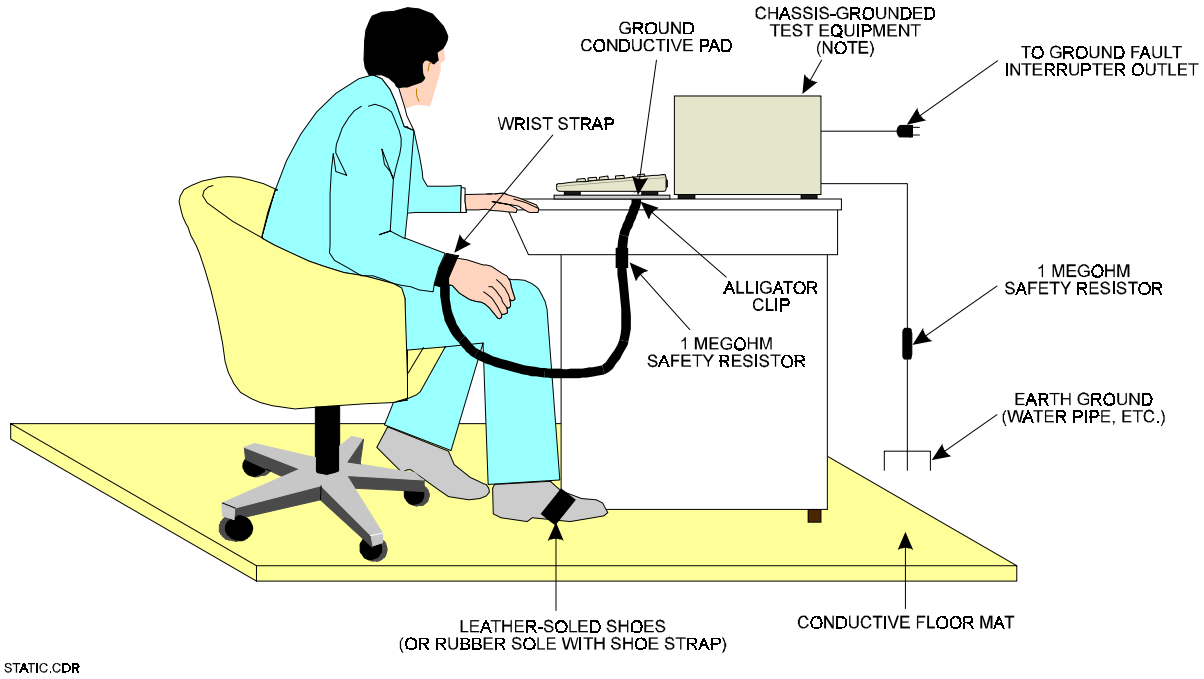


NOTE: Keep all chassis-grounded test equipment off conductive pad or safety resistor is defeated (bypassed).

***Figure 6-2. Static-Safe Work Bench, Typical Setup***

After removal from the protective bags or the card cage, always hold the circuit cards by the front panel handle and the edge of the card. Avoid contacting the surface of the board, the leads or traces, and the modules mounted on the board.

When not installed in the card cage, the circuit cards should be placed in conductive static shielding bags for storage or for transporting to/from storage or repair areas. All work surfaces must be conductive and grounded to earth ground. Each work surface must be grounded separately, with its own safety resistor.

WARNING

As a safety feature, work surfaces must be grounded through a 1-megohm resistor to limit any current should an energized (live) circuit come in contact with the surface. Ground fault interrupters should be used where possible to provide maximum protection. All chassis-grounded equipment must be kept off the work surface or the safety resistor will be defeated (bypassed).

## 6.3 SCHEDULED MAINTENANCE AND SYSTEM PERFORMANCE CHECKS

Section 6.3 provides scheduled preventive maintenance and system performance checks. This encompasses performance (e.g., position confidence tests) checks, reserve power battery tests, and equipment performance status checks. The performance checks are either part of scheduled (periodic) maintenance or are done on an “as required” basis, including post installation or after completion of corrective maintenance actions. Some of these checks are located in Section 6.3; others are located elsewhere in this Technical Instruction Book (TIB). The index of **Table 6-0a** lists the various preventive maintenance procedures (including periodic and “as required” maintenance performance checks) and provides corresponding text references for each. Coordinating with the air traffic control (ATC) Supervisor must occur whenever a maintenance event is being scheduled that will take CCAs, operator positions, and/or equipment units off-line.

NOTE

The Transmission Level (TL) tutorial in Section 6.9 is provided to assist the user of this Technical Instruction Book in gaining a clearer understanding of the TL concept and the meaning, usage, and relationship of the units dBm0, dBm, and 0 TLP used frequently throughout these procedures.

***Table 6-0a. Index of System Performance Checks and Scheduled Preventive Maintenance Actions***

| PERIODICITY | MAINTENANCE ACTION | REFERENCE |
|---|---|---|
| | • Power Supply output voltage/current check | |
| S | —Power Supply Module | 6.3.3.1 |
| S | —Power Supply Redundancy Test | 6.3.3.2 |
| AR | • Low Voltage Disconnect Units | 6.3.3.3 |
| AR | • Uninterruptable Power Supply (UPS) | 6.3.3.4 |
| AR | • End-to-End Audio Performance Check/AGC System Checkout | 6.3.3.5 |
| AR | • Legal Record Performance Check | 6.3.3.6 |
| AR | • Network Date/Time Change Procedure (see *SCT User Manual*, paragraph 2.4.3.7) | 6.3.3.8 |
| AR | • Central Rack Performance Checks (SCT/MCT Diagnostics) | 6.3.3.10 |
| S | • Battery Test | 6.3.1 (Parts 1 & 2) |
| | • Radio and Telephone Card Performance Checks | 6.3.2 |
| S | —Radio Processor (includes AGC [Transmit] Compression) | 6.3.2.1 |
| S | —Remote Radio Processor | 6.3.2.2 |
| S | —PBX Interface (4-wire) | 6.3.2.3 |
| S | —PBX Interface (2-wire) | 6.3.2.4 |
| S | —ASU Interface | 6.3.2.5 |
| S | —E&M Interface | 6.3.2.6 |
| S | —SS-1/SS-4 Interface | 6.3.2.7 |
| AR | • Position Equipment Power-Up and Initial Performance Check (After Installation) | 2.10 |
| | —TED Position, Local/Remote<br>Automatic Loopback Checks (4)<br>Manual Lamp Test<br>Manual Touch Test | 2.10.1, 2.10.2, 2.10.2.1, 2.10.2.2 |
| | —Membrane Hardkey Position, Local/Remote<br>Automatic Loopback Checks (4)<br>Manual Lamp Test<br>Manual Touch Test | 2.10.1, 2.10.2.1, 2.10.2.3 |

***Table 6-0a. Index of System Performance Checks and Scheduled Preventive Maintenance Actions (Continued)***

| PERIODICITY | MAINTENANCE ACTION | REFERENCE |
|---|---|---|
| AR* | • Position Confidence Test | 6.3.3.9 and 3.3 |
| | —Touch Screen Position—Loopback Tests (Automated)<br>Position Loopback<br>Subsystem Loopback<br>System Loopback<br>Secondary System (Split Position Only) | 3.3.2.1, 3.3.2.2 |
| | —Touch Test (Manual) | |
| | —"Split Pot" Test | |
| | —A/G Speaker Test | |
| | —G/G Speaker Test | |
| * **NOTE:** This performance check causes the position being tested to go off-line and, as such, should not be performed while position is operational or without the Supervisor's permission. This test should be performed whenever the position is placed back on-line following a power loss or maintenance work. The Supervisor must be informed if the position is not functioning properly; malfunctioning positions must not be operated. This test includes manual tests to confirm proper hardware and ISDN link performance. | | |
| AR | • Hardkey Position | 3.3.2.1, 3.3.2.3 |
| | —Loopback Tests (Automated)<br>Position Loopback<br>Subsystem Loopback<br>System Loopback<br>Secondary System (Split Position Only) Loopback Checks (Automated)<br>"Auto Lamp" Check (Automated)<br>Lamp Touch Test (Manual)<br>Lamp Cycle Check<br>"Split Pot" Test<br>Speaker Check<br>G/G Speaker Check | |
| AR | • Central rack Maintenance Diagnostics (Performance Checks) | 6.3.3.10 |
| | —SCT/MCT Setup Procedure | 6.7.1.1 |
| | —Monitoring Test Procedure | 6.7.1.2 |
| | —Loopback Test (Diagnostics)<br>**NOTE:** Performance of this check will disable operator position undergoing test. This test must be coordinated with ATC. | 6.7.1.3 |
| **Legend:** S = Semiannually AR = As Required W = Weekly | | |

### 6.3.1 Battery Test

#### 6.3.1.1 Equipment

NOTE

Recommended battery type (currently used in the ETVS system) is: 12-Volt Solid Lead Acid Battery, 45 Amp-Hour Rating (DENRO P/N 390003-001).

- Battery test requires the following equipment:
- Digital VOM Fluke 77, or equivalent
- Electrical tape
- Allen wrench (some systems may require use of short Phillips screwdriver, depending on type of cable terminal connections being used by those systems)
- Stop Watch or Wrist Watch, as available

This is a battery terminal voltage check to be conducted on the system once every 6 months; the purpose of this check is to determine which, if any, system batteries are bad and need to be replaced.

The battery test procedure is the same for both central racks and the remote power rack. The battery removal/installation procedure for the full height remote power rack is also the same as that for the central rack.

NOTE

Some ETVS systems do not use the remote power rack.

NOTE

The ETVS has four basic system configurations, designated as BS 1 through BS 4. The number of batteries supplying reserve power for the system (and battery locations) depends on the particular system being serviced. For example, a typical BS 3 system has three pairs of batteries (for a total of six) in the Central Equipment

Rack, plus one pair of batteries in the Remote 4-position Power Rack Assembly. Depending on how they are configured, ETVS systems may have as few as two batteries, or as many as 20 or more. The arrangement in this procedure typifies BS 3 systems.

NOTE

Battery locations and quantities vary between basic system configurations and sites. Each battery compartment will contain either one pair or two pairs of batteries, depending on the system. Access may be more readily obtained from the front of the rack in some systems; in other systems, batteries may be more accessible through the rear access door.

#### 6.3.1.2 Battery Test – Part 1

1. Determine exact location(s) of the batteries to be tested, then gain access to batteries in compartment(s) at bottom of applicable rack assemblies. If access must be from front of rack, a louvered panel at bottom of rack and a blank panel just above it must be removed (via the removal of four screws in each panel).

NOTE

If any battery cable is suspected to be defective, the services of level 2 support (depot) maintenance personnel will be required to replace cable(s).

2. Visually inspect all battery cables, connections, and terminals. Tighten loose connections. Check battery cables for damage, deterioration, cracks, and frayed insulation; if determined that a cable needs replacing, request higher echelon (depot) level maintenance personnel remove and replace.
3. Turn off power supplies.

CAUTION

If the Low Power alarm activates (Low Power LED turns red) any time during the test, restore power to the system immediately and proceed to Part 2 of the Battery Test Procedure.

4. Start timing step 5, using either stop watch or wrist watch..

NOTE

Step 5 must be completed within 15 minutes.

5. Using the voltmeter (e.g., Fluke 77 digital VOM, or equivalent), measure and record the voltage across the terminals of each battery
6. When step 5 is complete, stop the stop watch (if using) or record elapsed time if using wrist watch..
7. Turn on power supplies.
8. Compare the recorded terminal voltages of two series-connected batteries. If the difference in voltages is greater than 1.5V, one of the battery pair is considered to have failed. Proceed to Part 3 (fault isolation) (paragraph 6.3.1.4) of the Battery Test Procedure. Repeat the process for each series-connected pair.
9. Replace any panels removed in step 1. Maintenance check completed.

### 6.3.1.3 Battery Test-Part 2

NOTE

Part 1 of the battery test is performed while the batteries are under system load. (This is the preferred method.) Part 2 is to be performed if the Low Power alarm activates within 15 minutes after turning off the power supplies.

1. Ensure power supplies are on before proceeding with Part 2 of the test.
2. Using the voltmeter (i.e., Fluke 77 digital VOM, or equivalent), measure the battery terminal voltage for each battery. Compare the voltage measurements for each series-connected pair. If the difference in voltages is greater that 2V, one of the battery pair is considered to have failed. Proceed

to Part 3 (paragraph 6.3.1.4) of the Battery Test Procedure for fault isolation. Repeat the process for each series-connected pair.

3. Replace any front panels previously removed. Maintenance check completed.

### 6.3.1.4 Battery Test-Part 3 (Fault Isolation)

NOTE

This part of the battery test contains fault isolation procedures. Perform Part 3 if any suspect batteries are found in Parts 1 or 2.

NOTE

Although the system software can report reserve power batteries have failed, it cannot specifically pinpoint which battery or batteries have failed. Therefore, battery checks must be conducted on all batteries.

1. Go to the central equipment rack(s) containing the Battery Low Voltage Disconnect (LVD), System Alarm Panel (SAP) Interface; open the rack assembly rear door.

NOTE

The battery low voltage disconnect unit front panel should have the label “Battery Connect” affixed to it. If not, contact DENRO for label. See **Figure 5-61** for location of label.

2. Remove +24 VDC power fuse (F1) from front panel of the Battery LVD assembly. This isolates the batteries, removing the +24 VDC battery control voltage between the positive battery terminal and the LVD assembly.

NOTE

The LVD front panel fuse is labeled “Fuse Amp.”

NOTE

When fuse F1 is removed, the LOAD CONNECTED LED goes out and the LVD panel contactor opens (should hear a “klunking” sound). On SCT, Power Supply Module Down (24 V red icon) appears on status line of Main Selection menu.

WARNING

Use extreme caution when performing steps 3 and 4. The wrench used can conduct electricity. Do not allow the wrench to touch other battery terminals or any other metal while disconnecting the battery cables.

3. Unbuckle the 42-inch hold-down straps securing the batteries identified above.

WARNING

For your safety and to protect equipment, use the protective insulated caps provided for this purpose as instructed in step 4. These insulated caps are stored in a bag located inside the rack cabinet.

4. Using the 5/32” Allen wench, disconnect the battery cables in the following order, noting the cable connections for reinstallation purposes:
   a) Negative (-) cable-to-rack power bus. Disconnect all cables; protective caps not required.
   b) Positive (+) cable-to-rack power bus. Disconnect all cables; install protective caps.
   c) Cable linking the two batteries of just the affected battery pair: (-) terminal of one battery to the (+) terminal of the adjacent battery.
5. With the batteries completely isolated, measure the battery terminal voltage for each battery identified earlier. The voltage reading should be no less than 10 VDC. If voltage is less than the minimum acceptable reading, the battery is considered to have failed and must be replaced. Continue this process until all batteries concerned have been checked.

CAUTION

Batteries weigh approximately 40 pounds each. Use of carrying straps is recommended if they are being carried individually to and from the equipment area. If moving several batteries (in their cartons) at the same time, use of a hand truck is recommended. Handle batteries with care when installing within the close confines of the equipment rack.

NOTE

Ensure any replacement battery is fully charged and in good operating condition before using.

6. Replace a failed or defective battery with a fully charged battery known to be in good operating condition. Any replacement battery should be checked before installing.

NOTE

Do not forget to remove the protective caps and place them back in the storage bag within the cabinet.

7. With new battery in place, reconnect cables to battery terminals and secure hold-down strap(s). Replace the front panels removed in step 1.
8. At LVD unit, install fuse previously removed and close rear rack door. The Device Status indicator should, after a short elapsed interval, indicate that the batteries are on-line. Ensure that all open rack rear doors have been closed.
9. Check error messages and battery status bar indicators (icons on Main Selection Menu) at SCT/MCT for current reserve power battery status; these should indicate that batteries are charging.

NOTE

A battery check should also be performed for the remote power rack; except for the number of batteries involved and their

physical location, the procedure is the same as that for the batteries at the central rack.

#### 6.3.1.5 Full Height Remote Power Rack Battery Removal/Replacement

See paragraph 6.5.6 for removal and replacement procedures. The procedures are the same as for the central rack.

### 6.3.2 Radio Processor/Telephone Interface CCA Performance Checks

This section provides periodic performance check procedures for the radio CCAs (radio processor, remote radio processor) and the telephone interface CCAs (4-wire PBX, 2-wire PBX, ASU, E&M, and SS-1/SS-4). These performance checks are listed in **Table 6-0b**.

***Table 6-0b. Radio Processor/Telephone Interface CCA Performance Checks***

| CCA | PERFORMANCE CHECK |
|---|---|
| Radio Processor | • Receive Level<br>• Transmit Level<br>• Transmit Compression (AGC)<br>• VOX Detection |
| Remote Radio Processor | • Receive Level<br>• Transmit Level<br>• VOX Detection |
| 4-Wire PBX Interface | • Receive Level<br>• Transmit Level<br>• VOX Detection |

***Table 6-0b. Radio Processor/Telephone Interface CCA Performance Checks (Continued)***

| CCA | PERFORMANCE CHECK |
|---|---|
| 2-Wire PBX Interface | • Receive Level<br>• Transmit Level<br>• VOX Detection |
| ASU Interface | • Receive Level<br>• Transmit Level |
| Phone E&M Interface | • Receive Level<br>• Transmit Level<br>• Tone Detection<br>• Tone Generation |
| SS-1/SS-4 Interface | • Receive Level<br>• Transmit Level<br>• VOX Detection<br>• Tone Detection<br>• Tone Generation |

The ETVS alignment philosophy for corrective maintenance is explained at the beginning of paragraph 6.6.5. The level checks performed in paragraph 6.3.2 are used only to verify that the TLs measured in those procedures agree with the site-specific required values and the worksheet values provided with each procedure.

Section 5 contains jumper/strapping tables which cover all jumpers. Section 6 covers only those jumpers with which the technician needs to be concerned. Performance checks (no adjustments) do not require the setting of jumpers; such action would only be done if absolutely necessary in the alignment procedures of paragraph 6.6.5.

There are no adjustments made in the following procedure; adjustments are made in the alignment procedures section, paragraph 6.6.5.

### 6.3.2.1 Radio Processor

CAUTION

Before undertaking these procedures, ensure that the associated communications channel is idle. Otherwise, disruption or interruption of communications will occur.

CAUTION

This card contains ESD-sensitive devices. Use proper handling at all times.

NOTE

All tests must be performed with the transmit and receive circuits disconnected from any radio equipment. Remove demarc clips, if necessary.

6.3.2.1.1 Test Equipment and Setup

**Figure 6-3a** presents a simplified diagram covering the transmit path of the performance check; **Figure 6-3b** provides a similar diagram for the receive path.

a) Equipment

Card audio level check requires the following equipment:

- Alignment tool (GC Electronics ‘Combination Aligner…’ Cat. #8275 or similar)
- Test cables
- HP Transmission Impairment Measurement Set (TIMS) 4934A [or equivalent Transmission Test Set (TTS)]
- Impedance Matching Test Adapter (IMTA), DENRO P/N 110311-001, or equivalent

b) Setup (see **Table 6-1**.)

***Table 6-1. Radio Processor Audio Level Performance Check Setup***

| AUDIO LEVEL PERFORMANCE CHECK SETUP | TIMS |
|---|---|
| Level | Site-dependent (see **Table 6-2**) |
| Frequency | 1004 Hz |
| Impedance | 600 ohms |
| Terminated/Bridged Connection | Terminated |

6.3.2.1.2 Level Checks

1. Remove demarc clips (if necessary).
2. Note and record the current position of the front panel DIGN device-type rotary switch (S1). This setting will be restored when alignment has been completed.
3. Using the alignment tool, set the DIGN front panel rotary switch (S1) to ‘F.’ This places the card into **alignment** mode.
4. On front panel, press RESET button (for card state change to be recognized).
5. The transmit level check (part b) should be performed if the TX compression (AGC) is disabled; that is, jumper W15 set to position 1 to 2 (DISABLED—OFF). The compression check (part c) should be performed if the TX compression (AGC) is enabled; that is, jumper W15 set to 2 to 3 (ENABLED—ON).
6. Perform the following level checks.

a) Receive Level

1. Set the TIMS for 600 ohms terminated.
2. Referring to **Table 6-2**, locate, in the ‘Receive Path—site-specific TL Level’ column, the site-specific TL. Set the TIMS output per the level given in the ‘RCV BRDG Input (dBm)’ column that corresponds to the site-specific TL level. Set the frequency on the TIMS to 1004 Hz.
3. Connect the TIMS send channel to the **RCV BRDG** front panel jack.
4. Connect the TIMS receive channel to the **RCD** front panel jack.
5. Verify that the observed receive dBm level agrees with that listed in the performance check worksheet of **Table 6-2**. The observed readout should indicate -10 dBm ±0.5 dB for the output at the RCD jack. If not, maintenance personnel should perform corrective maintenance

alignment in accordance with the procedures in paragraph 6.6.5.3 for the Radio Processor.

b) Transmit Level

1. Set the TIMS for 600 ohms terminated.
2. Set the output level to -10 dBm at 1004 Hz.
3. Connect the TIMS send channel to the **RCV BRDG** front panel jack.
4. Connect the TIMS receive channel to the **XMT BRDG** front panel jack.
5. Verify that the observed transmit dBm level agrees with that listed in the performance check worksheet of **Table 6-2**. As determined by the site-specific (level from column 1 of transmit path), the TIMS should be within ±0.5 dB of the corresponding level in column 3 (XMT BRDG). If readout is not within the required tolerance, maintenance personnel should perform corrective maintenance alignment in accordance with the procedures in paragraph 6.6.5.3 for the Radio Processor.

c) AGC (Transmit) Compression

NOTE

You cannot verify compression when card is in ‘align’ mode.

NOTE

For redundant radio processors only: Technician must ensure, throughout the following steps, that the card undergoing the performance check is NOT in standby mode. If it is, the redundant card must be reset to force the card to be the MAIN (active) card.

1. Ensure S1 is in its original position for this check and that jumper W15 is set to 2 to 3 position (ENABLED—ON).
2. Set the TIMS for 600 ohms terminated.
3. Set the output level to -22 dBm @ 1004 Hz.
4. Connect an IMTA to the maintenance position’s TRAINEE jack.
5. Connect the TIMS send channel to the send channel of the IMTA.
6. Connect the TIMS receive channel to the radio’s XMT BRDG front panel jack.
7. At the position, select the XMT key for the radio’s frequency under test. Place the PTT switch on the IMTA to ON.

8. Verify output level matches desired TL ±1 dB 0TL. If not, maintenance personnel should perform corrective maintenance alignment procedures in accordance with paragraph 6.6.5.3.3c (AGC Radios) for the Radio Processor.

NOTE

The purpose and use of the VOX detect circuit are explained in Section 5.7. VOX detect performance is checked following the procedure of part d) below.

d) VOX Detect

1. Ensure S1 is in the 'F' position for the following steps.
2. Set the TIMS for 600 ohms terminated.
3. Set the output frequency to 1004 Hz.
4. Set the TIMS output level to -28 dBm0.
5. Connect the TIMS send (transmit) channel to the **RCV BRDG** front panel jack.
6. Check that the green VOX LED is illuminated. Record whether check passed or failed on worksheet, **Table 6-3**.
7. Set the TIMS output level to -34 dBm0.
8. Check that the LED is extinguished. Record whether check passed or failed on worksheet, **Table 6-3**. If card passes VOX Detect check, proceed to paragraph 6.3.2.1.3.
9. If either performance check failed, replace card per removal/replacement procedure of paragraph 6.5.3. Repeat both VOX performance checks to ensure VOX Detect capability is operable in replacement card.

6.3.2.1.3 Placing Card Back Into Operation

If the Radio Processor Card alignment procedures have all been completed successfully, perform the following steps:

1. Disconnect all test cables.
2. If necessary, restore original setting of the front panel DIGN device-type rotary switch (S1). (Card must be pulled out of slot and reinserted.)
3. Press RESET button for card state change to be recognized.
4. Restore demarc clips (if necessary).

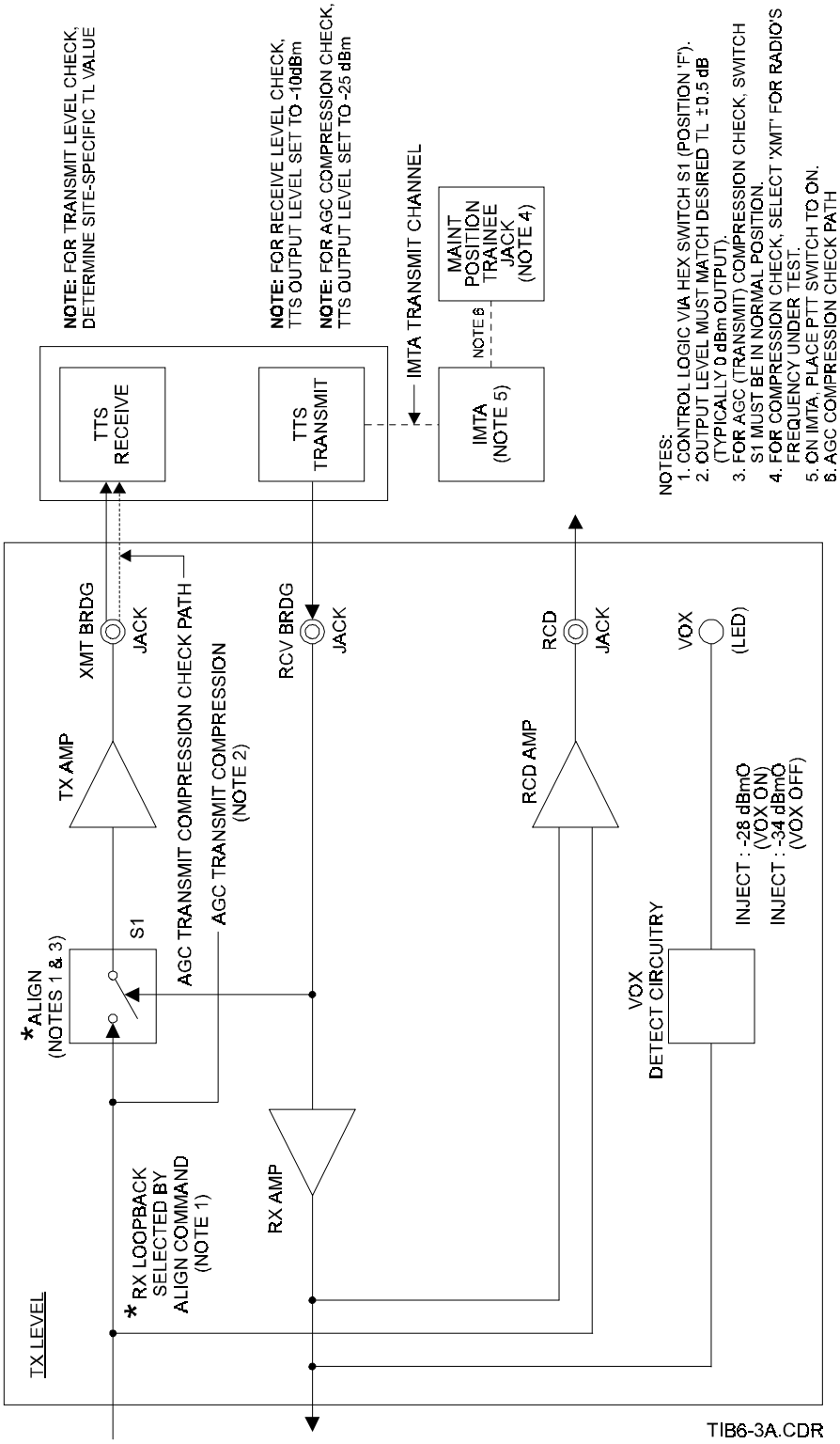


*Figure 6-3a. Radio Processor Performance Check Block Diagram (Transmit Path)*

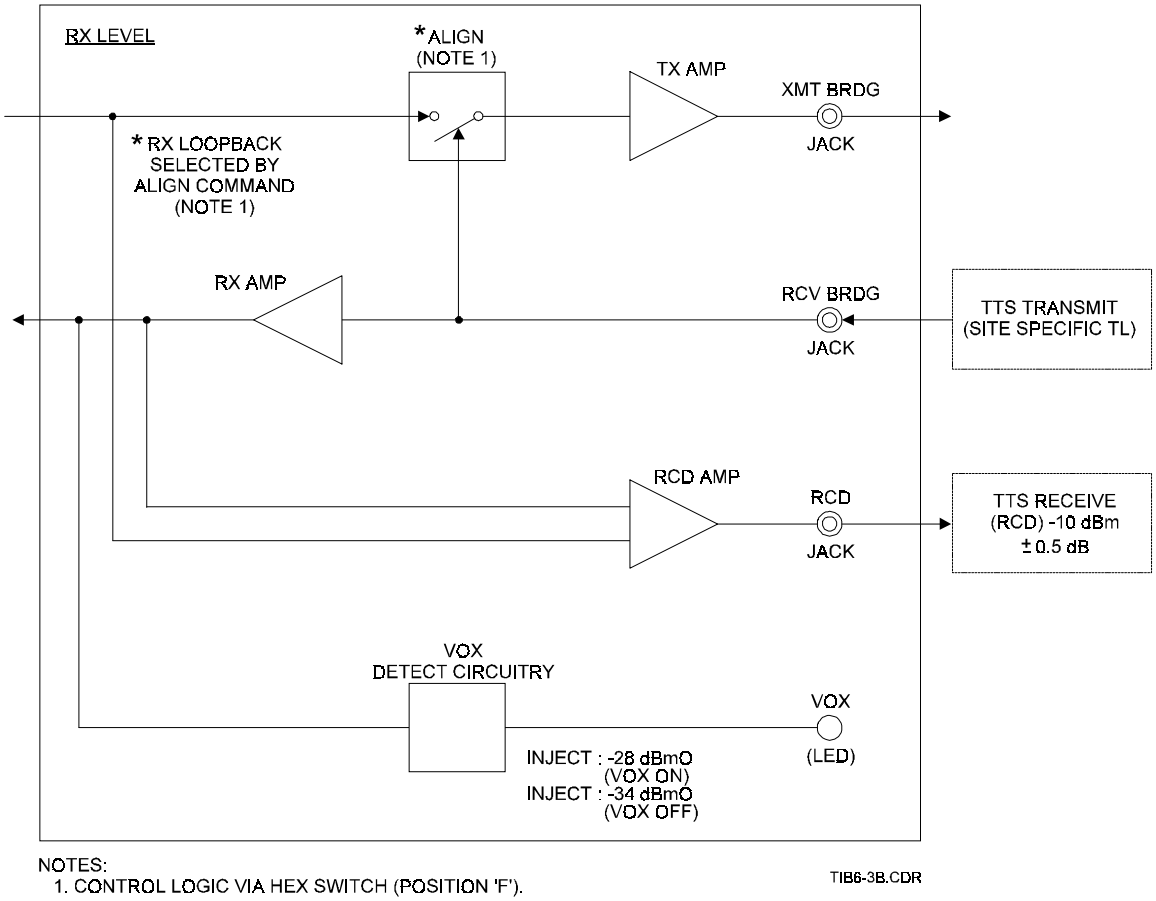


***Figure 6-3b. Radio Processor Performance Check Block Diagram (Receive Path)***

## *Table 6-2. Radio Processor Performance Check Worksheet*

| RECEIVE PATH | | | TRANSMIT PATH | | |
|---|---|---|---|---|---|
| Site-Specific TL level | RCV BRDG Input (dBm) | RCD BRDG (RCRD) (dBm) | Site-Specific TL level | RCV BRDG Input (dBm) | XMIT BRDG (dBm) |
| +12 | +2 | -10 | +12 | -10 | +2 |
| +11 | +1 | -10 | +11 | -10 | +1 |
| +10 | 0 | -10 | +10 | -10 | 0 |
| +9 | -1 | -10 | +9 | -10 | -1 |
| +8 | -2 | -10 | +8 | -10 | -2 |
| +7 | -3 | -10 | +7 | -10 | -3 |
| +6 | -4 | -10 | +6 | -10 | -4 |
| +5 | -5 | -10 | +5 | -10 | -5 |
| +4 | -6 | -10 | +4 | -10 | -6 |
| +3 | -7 | -10 | +3 | -10 | -7 |
| +2 | -8 | -10 | +2 | -10 | -8 |
| +1 | -9 | -10 | +1 | -10 | -9 |
| 0 TL | -10 | -10 | 0 TL | -10 | -10 |
| -1 | -11 | -10 | -1 | -10 | -11 |
| -2 | -12 | -10 | -2 | -10 | -12 |
| -3 | -13 | -10 | -3 | -10 | -13 |
| -4 | -14 | -10 | -4 | -10 | -14 |
| -5 | -15 | -10 | -5 | -10 | -15 |
| -6 | -16 | -10 | -6 | -10 | -16 |
| -7 | -17 | -10 | -7 | -10 | -17 |
| -8 | -18 | -10 | -8 | -10 | -18 |
| -9 | -19 | -10 | -9 | -10 | -19 |
| -10 | -20 | -10 | -10 | -10 | -20 |
| -11 | -21 | -10 | -11 | -10 | -21 |
| -12 | -22 | -10 | -12 | -10 | -22 |
| -13 | -23 | -10 | -13 | -10 | -23 |
| -14 | -24 | -10 | -14 | -10 | -24 |
| -15 | -25 | -10 | -15 | -10 | -25 |
| -16 | -26 | -10 | -16 | -10 | -26 |

***Table 6-3. Radio Processor VOX Detection Performance Check Worksheet***

| Test No. | Slot # | S/N, P/N | Radio Card VOX On @ (-28 dBm0) | Radio Card VOX Off @ (-34 dBm0) |
|---|---|---|---|---|
| 1 | | | | |
| 2 | | | | |
| 3 | | | | |
| 4 | | | | |
| 5 | | | | |
| 6 | | | | |
| 7 | | | | |
| 8 | | | | |
| 9 | | | | |
| 10 | | | | |
| 11 | | | | |
| 12 | | | | |
| 13 | | | | |
| 14 | | | | |
| 15 | | | | |
| 16 | | | | |
| 17 | | | | |
| 18 | | | | |
| 19 | | | | |
| 20 | | | | |
| 21 | | | | |
| 22 | | | | |
| 23 | | | | |
| 24 | | | | |
| 25 | | | | |
| 26 | | | | |
| 27 | | | | |
| 28 | | | | |
| 29 | | | | |
| 30 | | | | |

Legend: ✓ = Passed
x = Failed

### 6.3.2.2 Remote Radio Processor

CAUTION

Before undertaking these procedures, ensure that the associated communications channel is idle. Otherwise, disruption or interruption of communications will occur.

#### 6.3.2.2.1 Test Equipment and Setup

**Figure 6-4a** presents a simplified diagram covering the transmit path of the performance check; **Figure 6-4b** provides a similar diagram for the receive path.

a) Equipment

Card audio level checks require the following equipment:

- Small flat-tip screwdriver or alignment tool
- Test cables
- HP TIMS 4934A (or equivalent TTS)

b) Setup (see **Table 6-4**)

***Table 6-4. Remote Radio Audio Level Performance Check Setup***

| AUDIO LEVEL PERFORMANCE CHECK SETUP | TIMS |
|---|---|
| Level | Site-dependent (see **Table 6-5**) |
| Frequency | 1004 Hz |
| Impedance | 600 ohms |
| Terminated/Bridged Connection | Terminated |

#### 6.3.2.2.2 Level Checks

1. Remove demarc clips (if necessary).
2. Note current position of the DIGN front panel device-type rotary switch (S5). This setting will be restored when alignment has been completed.
3. Using the alignment tool, set the DIGN front panel device-type rotary switch (S5) to ‘F.’ This places the card into **alignment** mode.
4. Press the front panel RESET button.
5. Perform the following level checks.

a) Receive Level

1. Set the TTS for 600 ohms terminated.
2. Referring to **Table 6-5a**, locate, in the 'Receive Path—Site-Specific TL Level' column, the site-specific TL. Set the TIMS output per the level given in the 'RCV BRDG Input (dBm)' column that corresponds to the site-specific TL level. Set the frequency on the TIMS to 1004 Hz.
3. Connect the TTS send channel to the **RCV BRDG** front panel jack.
4. Connect the TTS receive channel to the **RCD** front panel jack.
5. Verify that the observed receive dBm level agrees with that listed in the performance check worksheet of **Table 6-5**. The observed readout at output (RCD) jack should be -10 dBm ±0.5 dB. If not within tolerance, maintenance personnel should perform alignment in accordance with procedures in paragraph 6.6.5 for the Remote Radio Processor.

b) Transmit Level

1. Set the **TTS** for 600 ohms terminated.
2. Set the output level to -10 dBm at 1004 Hz.
3. Connect the **TTS** send channel to the **RCV BRDG** front panel jack.
4. Connect the **TTS** receive channel to the **XMT BRDG** front panel jack.
5. Verify that the observed receive dBm level agrees with that listed in the performance check worksheet of **Table 6-5**. As determined by the site-specific TL level, the TIMS readout should be within ±0.5 dB of the corresponding level from XMT BRDG in column 3 (XMT BRDG). If not, maintenance personnel should perform corrective maintenance alignment in accordance with the procedures in paragraph 6.6.5.10 for the Remote Radio Processor.

c) Remote Radio VOX Detect (For Interlocked Radio Only)

1. Add Remote Radio to Maintenance Position Radio Module; this may be done by either reconfiguring the map or using the Frequency Add/Delete procedure. Perform this step as follows:

   a) Ensure that card to be used for this procedure is unused and available. NOTE: If system does not have a Central Rack Maintenance position, any other available operator position may be used.

      - Reconfiguration of Map Option

   b) From "Main Menu: Select 'Configure,' 'Maps,' 'Local.'

   c) Select 'Local Map' to be edited.

d) Edit (i.e., the local map to be edited).

e) Select Radio Module.

f) Assign Remote Radio Frequency from list of frequencies. Select 'OK,' then select 'OK' again, then select 'Close.'

g) Select Online, Local Reconfiguration Position ('Maint'); choose previously edited map (step d) from 'Available Maps.'

h) Activate 'Map' Activation Configuration.

i) Select 'yes.'

j) Select close.

- Frequency Add on/Delete Option

k) Select available position.

l) Press Freq A/D key.

m) At Radio Selector, select particular radio to be reconfigured. If successful, the LCD will show an arrow preceding the frequency of the radio selected.

n) Use down arrow (↓) until IA display reads 'Remote Radio.'

o) Select OK by pressing star (*) key on DTMF pad.

p) As a result of the action in step o, the selected LCD display on Radio Module is updated.

2. Set the TIMS for 600 ohms terminated.
3. Set the output frequency to 1004 Hz.
4. Set the TIMS output level to -19 dBm. Record results of check on **Table 6-6**. (To convert dBm0 to dBm, see paragraph 6.9.)
5. Connect the TIMS send (transmit) channel to the **RCV BRDG** front panel jack.
6. Check that the RX SEL button for the Remote Radio on the Maintenance Position flashes.
7. Set the TIMS output level to -25 dBm0. Record results of check on **Table 6-6**. (To convert dBm0 to dBm, see paragraph 6.9.)
8. Check that the RX SEL button stops flashing.

NOTE

If either of these performance checks fails, replace card per removal/replacement

procedure of paragraph 6.5.3. Then, repeat VOX detect check to ensure that the VOX detect capability is operable on replacement card.

6.3.2.2.3 Placing Card Back into Operation

If the previous steps have all been completed successfully, perform the following steps:

1. Disconnect all test cables.
2. Restore original setting of DIGN front panel device-type rotary switch (S5).
3. Press the RESET button.
4. Restore demarc clips (if necessary).

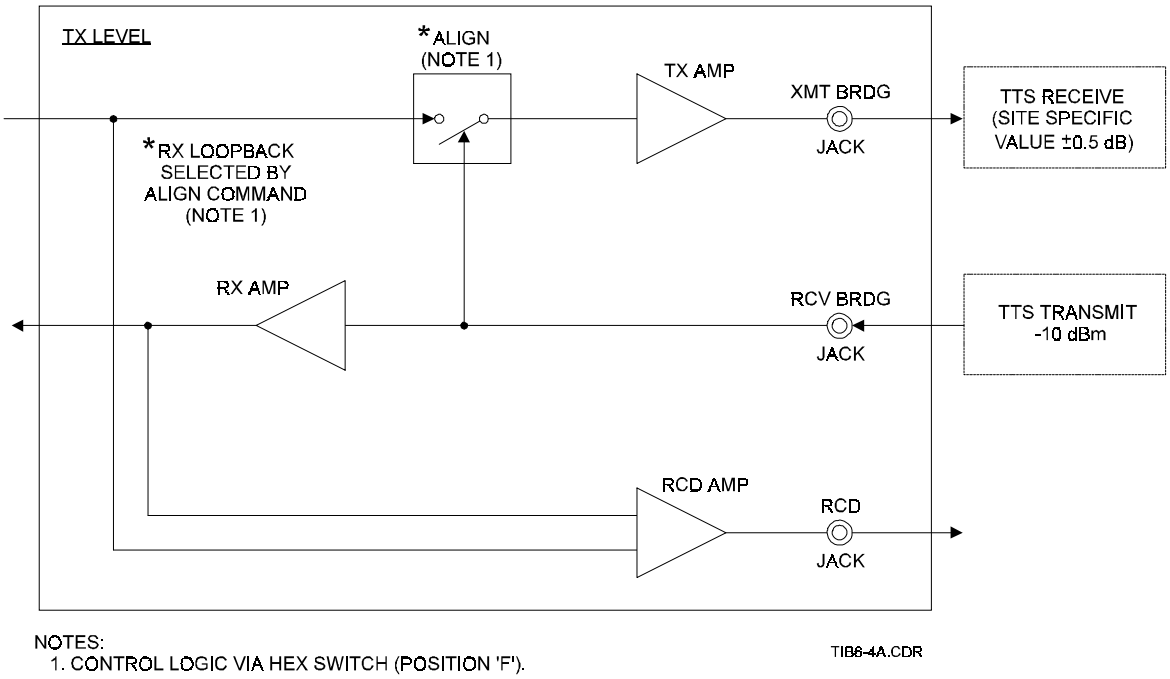


***Figure 6-4a. Remote Radio Processor Performance Check Block Diagram (Transmit Path)***

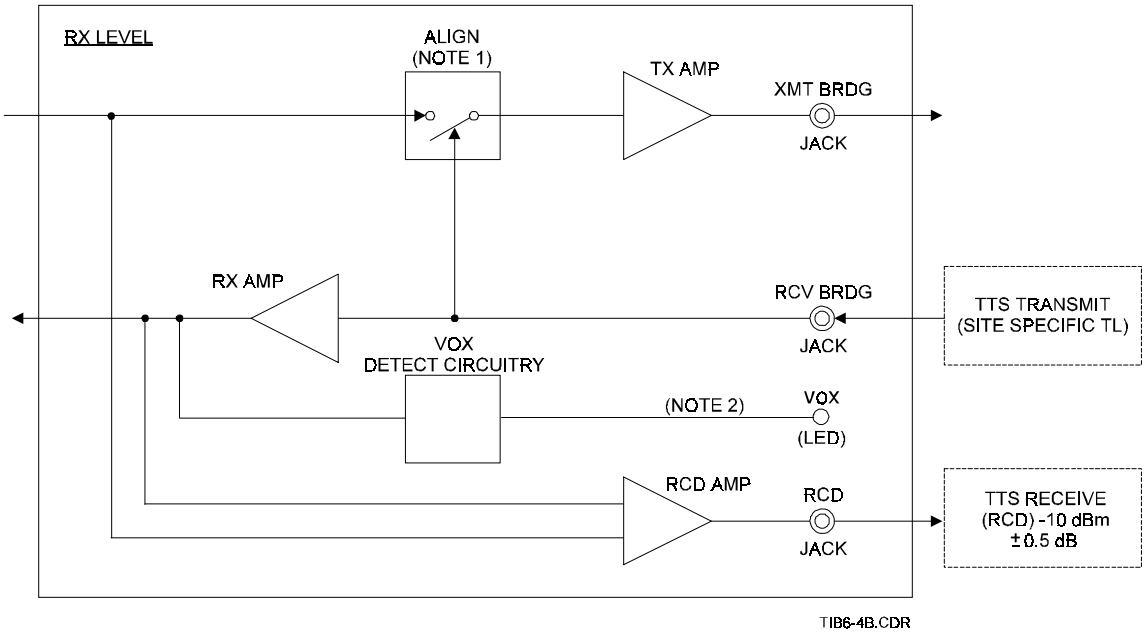


NOTES:
1. CONTROL LOGIC VIA HEX SWITCH (POSITION 'F').
2. FOR VOX CHECKS, CONNECT TIMS SEND (TRANSMIT) CHANNEL TO RCV BRDG FRONT PANEL JACK, INJECT -19 dBm0 (VOX ON) AND -25 dBm0 (VOX OFF).

***Figure 6-4b. Remote Radio Processor Performance Check Block Diagram (Receive Path)***

## *Table 6-5. Remote Radio Processor Performance Check Worksheet*

| RECEIVE PATH | | | TRANSMIT PATH | | |
|---|---|---|---|---|---|
| Site-Specific TL level | RCV BRDG Input (dBm) | RCD BRDG (RCRD) (dBm) | Site-Specific TL level | RCV BRDG Input (dBm) | XMIT BRDG (dBm) |
| +12 | +2 | -10 | +12 | -10 | +2 |
| +11 | +1 | -10 | +11 | -10 | +1 |
| +10 | 0 | -10 | +10 | -10 | 0 |
| +9 | -1 | -10 | +9 | -10 | -1 |
| +8 | -2 | -10 | +8 | -10 | -2 |
| +7 | -3 | -10 | +7 | -10 | -3 |
| +6 | -4 | -10 | +6 | -10 | -4 |
| +5 | -5 | -10 | +5 | -10 | -5 |
| +4 | -6 | -10 | +4 | -10 | -6 |
| +3 | -7 | -10 | +3 | -10 | -7 |
| +2 | -8 | -10 | +2 | -10 | -8 |
| +1 | -9 | -10 | +1 | -10 | -9 |
| 0 TL | -10 | -10 | 0 TL | -10 | -10 |
| -1 | -11 | -10 | -1 | -10 | -11 |
| -2 | -12 | -10 | -2 | -10 | -12 |
| -3 | -13 | -10 | -3 | -10 | -13 |
| -4 | -14 | -10 | -4 | -10 | -14 |
| -5 | -15 | -10 | -5 | -10 | -15 |
| -6 | -16 | -10 | -6 | -10 | -16 |
| -7 | -17 | -10 | -7 | -10 | -17 |
| -8 | -18 | -10 | -8 | -10 | -18 |
| -9 | -19 | -10 | -9 | -10 | -19 |
| -10 | -20 | -10 | -10 | -10 | -20 |
| -11 | -21 | -10 | -11 | -10 | -21 |
| -12 | -22 | -10 | -12 | -10 | -22 |
| -13 | -23 | -10 | -13 | -10 | -23 |
| -14 | -24 | -10 | -14 | -10 | -24 |
| -15 | -25 | -10 | -15 | -10 | -25 |
| -16 | -26 | -10 | -16 | -10 | -26 |

***Table 6-6. Remote Radio Processor VOX Detection Performance Check Worksheet***

| Test No. | Slot # | S/N, P/N | Radio Card VOX On @ (-19 dBm0) | Radio Card VOX Off @ (-25 dBm0) |
|---|---|---|---|---|
| 1 | | | | |
| 2 | | | | |
| 3 | | | | |
| 4 | | | | |
| 5 | | | | |
| 6 | | | | |
| 7 | | | | |
| 8 | | | | |
| 9 | | | | |
| 10 | | | | |
| 11 | | | | |
| 12 | | | | |
| 13 | | | | |
| 14 | | | | |
| 15 | | | | |
| 16 | | | | |
| 17 | | | | |
| 18 | | | | |
| 19 | | | | |
| 20 | | | | |
| 21 | | | | |
| 22 | | | | |
| 23 | | | | |
| 24 | | | | |
| 25 | | | | |
| 26 | | | | |
| 27 | | | | |
| 28 | | | | |
| 29 | | | | |
| 30 | | | | |

Legend: ✓ = Passed
x = Failed

### 6.3.2.3 PBX Interface (4-Wire)

CAUTION

Before undertaking these procedures, ensure that the associated communications channel is idle. Otherwise, disruption or interruption of communications will occur.

CAUTION

This card contains ESD-sensitive devices. Use proper handling at all times.

NOTE

All tests must be performed with the input and output circuits disconnected from any active telephone circuit. Remove demarc clips, if necessary.

6.3.2.3.1 Test Equipment and Setup

**Figure 6-5a** presents a simplified diagram covering the transmit path of the performance check; **Figure 6-5b** provides a similar diagram for the receive path.

a) Equipment

4-Wire PBX audio level checks require the following equipment:

- Small flat-tip screwdriver
- Test cables
- HP TIMS 4934A (or equivalent TTS)

b) Setup (See **Table 6-7**)

***Table 6-7. PBX Interface (4-Wire) Audio Level Performance Check Setup***

| AUDIO LEVEL PERFORMANCE CHECK SETUP | TIMS |
|---|---|
| Level | Site-dependent (see **Table 6-8**) |
| Frequency | 1004 Hz |
| Impedance | 600 ohms |
| Terminated/Bridged Connection | Terminated |

6.3.2.3.2 Level Checks

1. Remove demarc clips (if necessary).
2. Remove card from slot.
3. Note and record the current position of the device-type rotary switch (S1) installed on card. This setting will be restored when alignment has been completed.
4. Using the small, flat-tip screwdriver or alignment tool, set the device-type rotary switch (S1) to ‘F.’
5. Reinstall card in slot.
6. Perform the following level checks.

a) Receive Level

1. Set the TIMS send channel for an impedance of 600 ohms. Set the TIMS receive channel to 600 ohms terminated.
2. Referring to **Table 6-8**, locate, in the ‘Receive Path—Site-Specific TL Level’ column, the site-specific TL. Set the TIMS output per the level given in the ‘RCV BRDG Input (dBm)’ column that corresponds to the site-specific TL value. Set the frequency on the TIMS to 1004 Hz.
3. Connect the TIMS send channel to the **RCV BRDG** front panel jack.
4. Connect the TIMS receive channel to the **RCD BRDG** front panel jack.
5. The observed readout at output (RCD) jack should be -10 dBm ±0.5 dB. If not, maintenance personnel should perform alignment in accordance with procedures in paragraph 6.6.5.1 for the PBX Interface (4-wire) card.

b) Transmit Level

1. Set the TIMS send channel for an impedance of 600 ohms. Set the TIMS receive channel to 600 ohms terminated.
2. Set the output level to -10 dBm at 1004 Hz.
3. Connect the TIMS send channel to the **RCV BRDG** front panel jack.
4. Connect the TIMS receive channel to the **XMT BRDG** front panel jack.
5. Referring to **Table 6-8**, locate, in the 'Transmit Path—Site-specific TL Level' column, the site-specific TL value. The TIMS readout should be within ±0.5 dB of the corresponding level in the 'Transmit Path—XMT BRDG' column. If not within tolerance, maintenance personnel should perform alignment in accordance with procedures in paragraph 6.6.5.1 for the PBX Interface (4-wire) card.

NOTE

The purpose and use of the VOX detect circuit are explained in Section 5.4.1. VOX detect performance is checked following the procedure of part c) below.

c) VOX Detect

1. Set the TIMS for 600 ohms terminated.
2. Set the output frequency to 1004 Hz.
3. Set the TIMS output level to -22 dBm0. (See Tutorial in paragraph 6.9 for converting dBm0 to dBm.)
4. Connect the TIMS send (transmit) channel to the **RCV BRDG** front panel jack.
5. Check that the green VOX LED is illuminated. Record whether check passed or failed on worksheet, **Table 6-9**.
6. Set the TIMS output level to -28 dBm0. (See Tutorial in paragraph 6.9 for converting dBm0 to dBm.)
7. Check that the LED is extinguished. Record whether check passed or failed on worksheet, **Table 6-9**. If card passes VOX Detect check, proceed to paragraph 6.3.2.3.3.

NOTE

If either performance check failed, replace card per removal/replacement procedure of paragraph 6.5.3. Repeat both VOX performance checks to ensure that VOX Detect capability is operable on replacement card.

6.3.2.3.3 Placing Card Back Into Operation

If the 4-wire alignment procedures have all been completed successfully, perform the following steps:

1. Disconnect all test cables.
2. Remove card from slot.
3. Restore original setting of the device-type rotary switch (S1).
4. Reinstall card (i.e., slide the card back into its card slot and push all the way in so that the card is firmly secured in its edge connector; this action card resets card to original operation).
5. Restore demarc clips (if necessary).

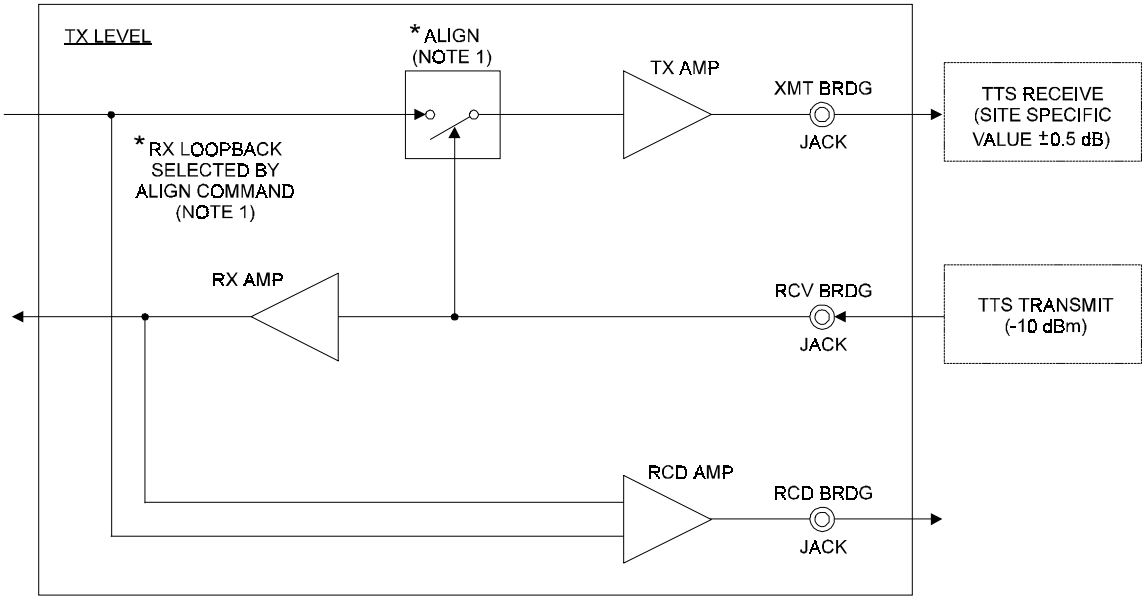


NOTES:
1. CONTROL LOGIC VIA HEX SWITCH (POSITION 'F').

TIB6-5A.CDR

***Figure 6-5a. PBX Interface (4-Wire) Performance Check Block Diagram (Transmit Path)***

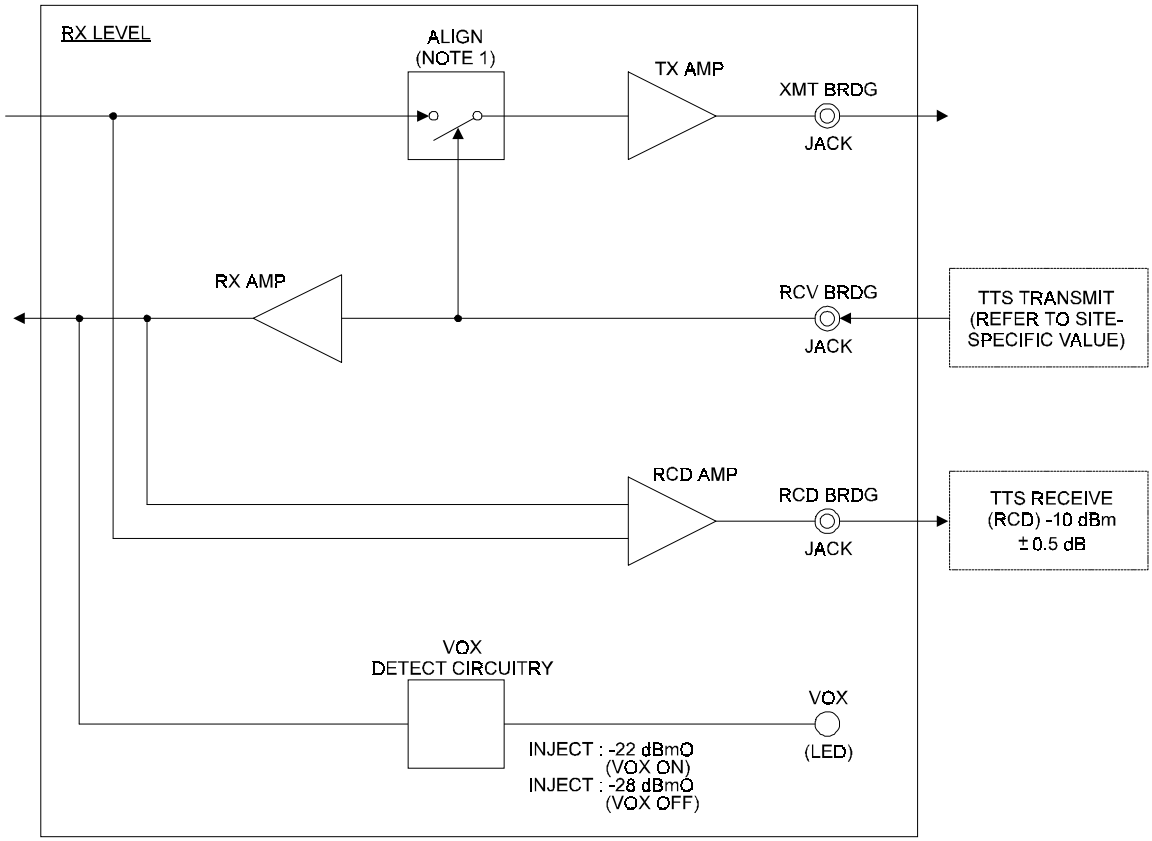


NOTES:
1. CONTROL LOGIC VIA HEX SWITCH (POSITION 'F').

***Figure 6-5b. PBX Interface (4-Wire) Performance Check Block Diagram (Receive Path)***

## *Table 6-8. PBX Interface (4-Wire) Performance Check Worksheet*

| RECEIVE PATH | | | TRANSMIT PATH | | |
|---|---|---|---|---|---|
| Site-Specific TL level | RCV BRDG Input (dBm) | RCD BRDG (RCRD) (dBm) | Site-Specific TL level | RCV BRDG Input (dBm) | XMIT BRDG (dBm) |
| +12 | +2 | -10 | +12 | -10 | +2 |
| +11 | +1 | -10 | +11 | -10 | +1 |
| +10 | 0 | -10 | +10 | -10 | 0 |
| +9 | -1 | -10 | +9 | -10 | -1 |
| +8 | -2 | -10 | +8 | -10 | -2 |
| +7 | -3 | -10 | +7 | -10 | -3 |
| +6 | -4 | -10 | +6 | -10 | -4 |
| +5 | -5 | -10 | +5 | -10 | -5 |
| +4 | -6 | -10 | +4 | -10 | -6 |
| +3 | -7 | -10 | +3 | -10 | -7 |
| +2 | -8 | -10 | +2 | -10 | -8 |
| +1 | -9 | -10 | +1 | -10 | -9 |
| 0 TL | -10 | -10 | 0 TL | -10 | -10 |
| -1 | -11 | -10 | -1 | -10 | -11 |
| -2 | -12 | -10 | -2 | -10 | -12 |
| -3 | -13 | -10 | -3 | -10 | -13 |
| -4 | -14 | -10 | -4 | -10 | -14 |
| -5 | -15 | -10 | -5 | -10 | -15 |
| -6 | -16 | -10 | -6 | -10 | -16 |
| -7 | -17 | -10 | -7 | -10 | -17 |
| -8 | -18 | -10 | -8 | -10 | -18 |
| -9 | -19 | -10 | -9 | -10 | -19 |
| -10 | -20 | -10 | -10 | -10 | -20 |
| -11 | -21 | -10 | -11 | -10 | -21 |
| -12 | -22 | -10 | -12 | -10 | -22 |
| -13 | -23 | -10 | -13 | -10 | -23 |
| -14 | -24 | -10 | -14 | -10 | -24 |
| -15 | -25 | -10 | -15 | -10 | -25 |
| -16 | -26 | -10 | -16 | -10 | -26 |

***Table 6-9. PBX Interface (4-Wire) VOX Detection Performance Check Worksheet***

| Test No. | Slot No. | S/N, P/N | Telephone Card VOX On @ -22 dBm0 | Telephone Card VOX Off @ -28 dBm0 |
|---|---|---|---|---|
| 1 | | | | |
| 2 | | | | |
| 3 | | | | |
| 4 | | | | |
| 5 | | | | |
| 6 | | | | |
| 7 | | | | |
| 8 | | | | |
| 9 | | | | |
| 10 | | | | |
| 11 | | | | |
| 12 | | | | |
| 13 | | | | |
| 14 | | | | |
| 15 | | | | |
| 16 | | | | |
| 17 | | | | |
| 18 | | | | |
| 19 | | | | |
| 20 | | | | |
| 21 | | | | |
| 22 | | | | |
| 23 | | | | |
| 24 | | | | |
| 25 | | | | |
| 26 | | | | |
| 27 | | | | |
| 28 | | | | |
| 29 | | | | |
| 30 | | | | |

Legend: ✓ = Passed
x = Failed

### 6.3.2.4 PBX Interface (2-Wire)

#### 6.3.2.4.1 Test Equipment and Setup

**Figure 6-6a** presents a simplified diagram covering the transmit path of the performance check; **Figure 6-6b** provides a similar diagram for the receive path.

a) Equipment

2-wire PBX audio level checks require the following equipment:

- Small flat-tip screwdriver or Alignment tool (GC Electronics 'Combination Aligner…' Cat. # 8275, or similar)
- Test cables
- HP TIMS 4934A (or equivalent TTS)

b) Setup (see **Table 6-10**)

***Table 6-10. PBX Interface (2-Wire) Audio Level Performance Check Setup***

| AUDIO LEVEL PERFORMANCE CHECK SETUP | TIMS |
|---|---|
| Level | Site-dependent (see **Table 6-11**) |
| Frequency | 1004 Hz |
| Impedance | 600 ohms |
| Terminated/Bridged Connection | Terminated |

1. Remove demarc clips (if necessary).
2. Pull out card to be checked.
3. Note and record the current position of the internal (installed on card) device-type rotary switch (S1). This setting will be restored when alignment has been completed.
4. Using the alignment tool, set the device-type rotary switch (S1) to 'F.' This places the card into **alignment** mode.
5. Reinstall card into slot.
6. Perform the following level checks.

#### 6.3.2.4.2 Level Checks

Perform the following level checks:

a) Receive Level

1. Referring to **Table 6-11**, locate, in the 'Receive Path—Site-specific TL Level' column, the site-specific TL value. Set the TIMS output per the level given in the 'LINE BRDG Input (dBm)' column that corresponds to the site-specific TL level. Set the frequency on the TIMS to 1004 Hz.
2. Connect the TIMS send channel to the LINE BRDG front panel jack.
3. Connect the TIMS receive channel to the RCD BRDG front panel jack.
4. The observed readout at output (RCD) jack should be -10 dBm ±0.5 dB. If not, maintenance personnel should perform alignment in accordance with procedures in paragraph 6.6.5.2 for the PBX Interface (2-wire) card.

b) Transmit Level

1. Connect the TIMS send channel to the **XMT AMPL IN** front panel jack.
2. Adjust the output level on TIMS to -10 dBm at 1004 Hz.
3. Connect the TIMS receive channel (600/900 ohms) TERM to the **LINE BRDG** front panel jack.
4. Verify that the observed transmit dBm level agrees with that listed in the performance check worksheet of **Table 6-11**. If not, maintenance personnel should perform alignment in accordance with procedures in paragraph 6.6.5.2 for the PBX Interface (2-wire) card.

NOTE

The purpose and use of the VOX detect circuit are explained in Section 5.4.1. VOX detect performance is checked following the procedure of part c) below.

c) VOX Detect

1. Set the TIMS for 600 ohms terminated.
2. Set the output frequency to 1004 Hz.
3. Set the TIMS output level to -22 dBm0. (See Tutorial in paragraph 6.9 for converting dBm0 to dBm.)
4. Connect the TIMS send (transmit) channel to the LINE BRDG front panel jack.
5. Check that the green VOX LED is illuminated. Record whether check passed or failed on worksheet, **Table 6-12**.
6. Set the TIMS output level to -28 dBm0. (See Tutorial in paragraph 6.9 for converting dBm0 to dBm.)
7. Check that the LED is extinguished. Record whether check passed or failed on worksheet, **Table 6-12**. If card passes VOX Detect check, proceed to paragraph 6.3.2.4.3.

NOTE

If either performance check failed, replace card per the removal/replacement procedure of paragraph 6.5.3. Repeat both VOX performance checks to ensure VOX Detect capability is operable on replacement card.

6.3.2.4.3 Placing Card Back Into Operation

If the previous steps have all been completed successfully, the card is ready for installation into the system.

1. Disconnect all test cables.
2. Remove card from slot.
3. Restore original setting of device-type switch (S1).
4. Reinstall card (i.e., slide the card back into its card slot and push all the way in so that the card is firmly secured in its edge connector). This action restores card state to original operation.
5. Restore demarc clips (if necessary).

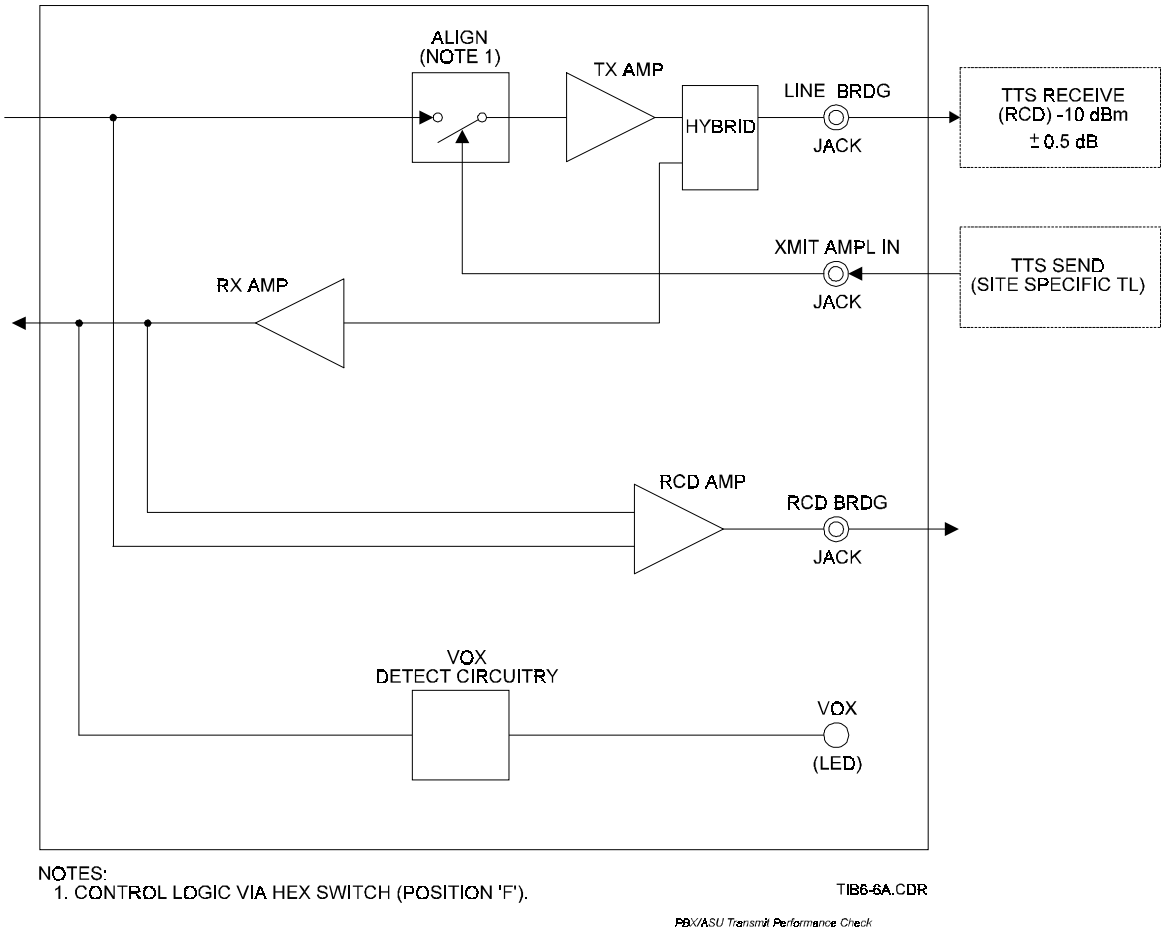


***Figure 6-6a. PBX Interface (2-Wire) Performance Check Block Diagram (Transmit Path)***

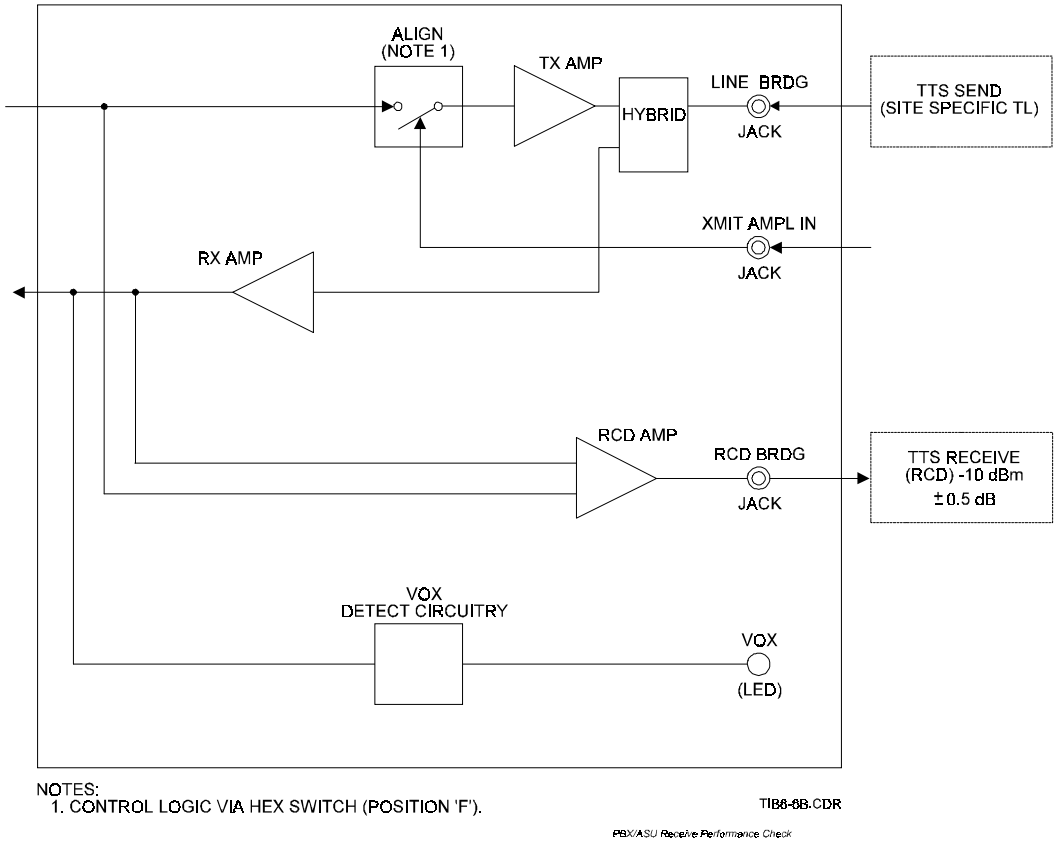


***Figure 6-6b. PBX Interface (2-Wire) Performance Check Block Diagram (Receive Path)***

## *Table 6-11. PBX Interface (2-Wire) Performance Check Worksheet*

| RECEIVE PATH | | | TRANSMIT PATH | | |
|---|---|---|---|---|---|
| Site-Specific TL level | LINE BRDG Input (dBm) | RCD BRDG (RCRD) (dBm) | Site-Specific TL level | XMT AMPL IN Input (dBm) | LINE BRDG (dBm) |
| +12 | +2 | -10 | +12 | -10 | +2 |
| +11 | +1 | -10 | +11 | -10 | +1 |
| +10 | 0 | -10 | +10 | -10 | 0 |
| +9 | -1 | -10 | +9 | -10 | -1 |
| +8 | -2 | -10 | +8 | -10 | -2 |
| +7 | -3 | -10 | +7 | -10 | -3 |
| +6 | -4 | -10 | +6 | -10 | -4 |
| +5 | -5 | -10 | +5 | -10 | -5 |
| +4 | -6 | -10 | +4 | -10 | -6 |
| +3 | -7 | -10 | +3 | -10 | -7 |
| +2 | -8 | -10 | +2 | -10 | -8 |
| +1 | -9 | -10 | +1 | -10 | -9 |
| 0 TL | -10 | -10 | 0 TL | -10 | -10 |
| -1 | -11 | -10 | -1 | -10 | -11 |
| -2 | -12 | -10 | -2 | -10 | -12 |
| -3 | -13 | -10 | -3 | -10 | -13 |
| -4 | -14 | -10 | -4 | -10 | -14 |
| -5 | -15 | -10 | -5 | -10 | -15 |
| -6 | -16 | -10 | -6 | -10 | -16 |
| -7 | -17 | -10 | -7 | -10 | -17 |
| -8 | -18 | -10 | -8 | -10 | -18 |
| -9 | -19 | -10 | -9 | -10 | -19 |
| -10 | -20 | -10 | -10 | -10 | -20 |
| -11 | -21 | -10 | -11 | -10 | -21 |
| -12 | -22 | -10 | -12 | -10 | -22 |
| -13 | -23 | -10 | -13 | -10 | -23 |
| -14 | -24 | -10 | -14 | -10 | -24 |
| -15 | -25 | -10 | -15 | -10 | -25 |
| -16 | -26 | -10 | -16 | -10 | -26 |

***Table 6-12. PBX Interface (2-Wire) VOX Detection Performance Check Worksheet***

| Test No. | Slot No. | S/N, P/N | Telephone Card VOX On @ -22 dBm0 | Telephone Card VOX Off @ -28 dBm0 |
|---|---|---|---|---|
| 1 | | | | |
| 2 | | | | |
| 3 | | | | |
| 4 | | | | |
| 5 | | | | |
| 6 | | | | |
| 7 | | | | |
| 8 | | | | |
| 9 | | | | |
| 10 | | | | |
| 11 | | | | |
| 12 | | | | |
| 13 | | | | |
| 14 | | | | |
| 15 | | | | |
| 16 | | | | |
| 17 | | | | |
| 18 | | | | |
| 19 | | | | |
| 20 | | | | |
| 21 | | | | |
| 22 | | | | |
| 23 | | | | |
| 24 | | | | |
| 25 | | | | |
| 26 | | | | |
| 27 | | | | |
| 28 | | | | |
| 29 | | | | |
| 30 | | | | |

Legend: ✓ = Passed
x = Failed

### 6.3.2.5 ASU Interface

CAUTION

Before undertaking these procedures, ensure that the associated communications channel is idle. Otherwise, disruption or interruption of communications will occur.

CAUTION

This card contains ESD-sensitive devices. Use proper handling at all times.

NOTE

All tests must be performed with the input and output circuits disconnected from any active telephone circuit. Remove demarc clips, if necessary.

#### 6.3.2.5.1 Test Equipment and Setup

**Figure 6-7a** presents a simplified diagram covering the transmit path of the performance check; **Figure 6-7b** provides a similar diagram for the receive path.

a) Equipment

Card audio level checks require the following equipment:

- Small flat-tip screwdriver or alignment tool (GC Electronics ‘Combination Aligner...’ Cat. #8275 or similar)
- Test cables
- HP TIMS 4934A (or equivalent TTS)

b) Setup (see **Table 6-13**)

***Table 6-13. ASU Interface Audio Level Performance Check Setup***

| AUDIO LEVEL PERFORMANCE CHECK SETUP | TIMS |
|---|---|
| Level | Site-dependent (see **Table 6-14**) |
| Frequency | 1004 Hz |
| Impedance | 600 ohms |
| Terminated/Bridged Connection | Terminated |

NOTE

The ASU supports both 600- and 900- ohm impedances. Switch S3 determines the impedance for the ASU interface. When S3 is in the C1 position, the ASU has an impedance of 900 ohms. When S3 is in the C2 position, the impedance is 600 ohms.

6.3.2.5.2 Level Checks

1. Remove demarc clips (if necessary).
2. Remove card to be checked.
3. Note the current position of the device-type rotary switch (S1). This setting will be restored when alignment has been completed.
4. Using the small, flat-tip screwdriver or alignment tool, set the device-type rotary switch to ‘F.’ This places the card into **alignment** mode.
5. Reinsert card into slot.
6. Perform the following performance checks.

a) Receive Level

1. Check the impedance that has been selected for this interface (i.e., 600 or 900 ohms). If necessary, change the setting by selecting either the C2=600 or C1=900 position on S3, as desired.
2. Set the TIMS send channel for an impedance of 600/900 ohms (the setting should match step 1). Set the TIMS receive channel to 600 ohms terminated.

3. Referring to **Table 6-14**, locate, in the 'Receive Path—Site-specific TL Level' column, the site-specific TL value. Set the TIMS output per the level given in the 'RCV BRDG Input (dBm)' column that corresponds to the site-specific TL level. Set the frequency on the TIMS to 1004 Hz.
4. Connect the TIMS send channel to the **LINE BRDG** front panel jack.
5. Connect the TIMS receive channel to the **RCD BRDG** front panel jack.
6. The observed readout at output (RCD) jack should be -10 dBm ±0.5 dB. If not, maintenance personnel should perform alignment in accordance with procedures in paragraph 6.6.5.4 for the ASU Interface.

b) Transmit Level

1. Connect the TIMS send channel to the XMT AMPL IN front panel jack.
2. Adjust the output level on TIMS to -10.0 dBm at 1004 Hz.
3. Connect the TIMS receive channel (600/900 ohms) TERM (terminal) to the **LINE BRDG** front panel check.
4. Verify that the observed transmit dBm level agrees with that listed in the worksheet of **Table 6-14**. As determined by the site-specific level from column 1 of transmit path, the TIMS readout should be within ±0.5 dB of the corresponding level from XMT BRDG in column 3 (XMT BRDG).

#### 6.3.2.5.3 Placing Card Back Into Operation

If the previous steps have all been completed successfully, perform the following steps:

1. Disconnect all test cables.
2. Remove the card from slot.
3. Restore original setting of device-type switch (S1).
4. Reinstall card (i.e., slide the card back into its card cage slot and push all the way in so that the card is firmly secured in its edge connector). This action restores card state to original operation.
5. Restore demarc clips (if necessary).

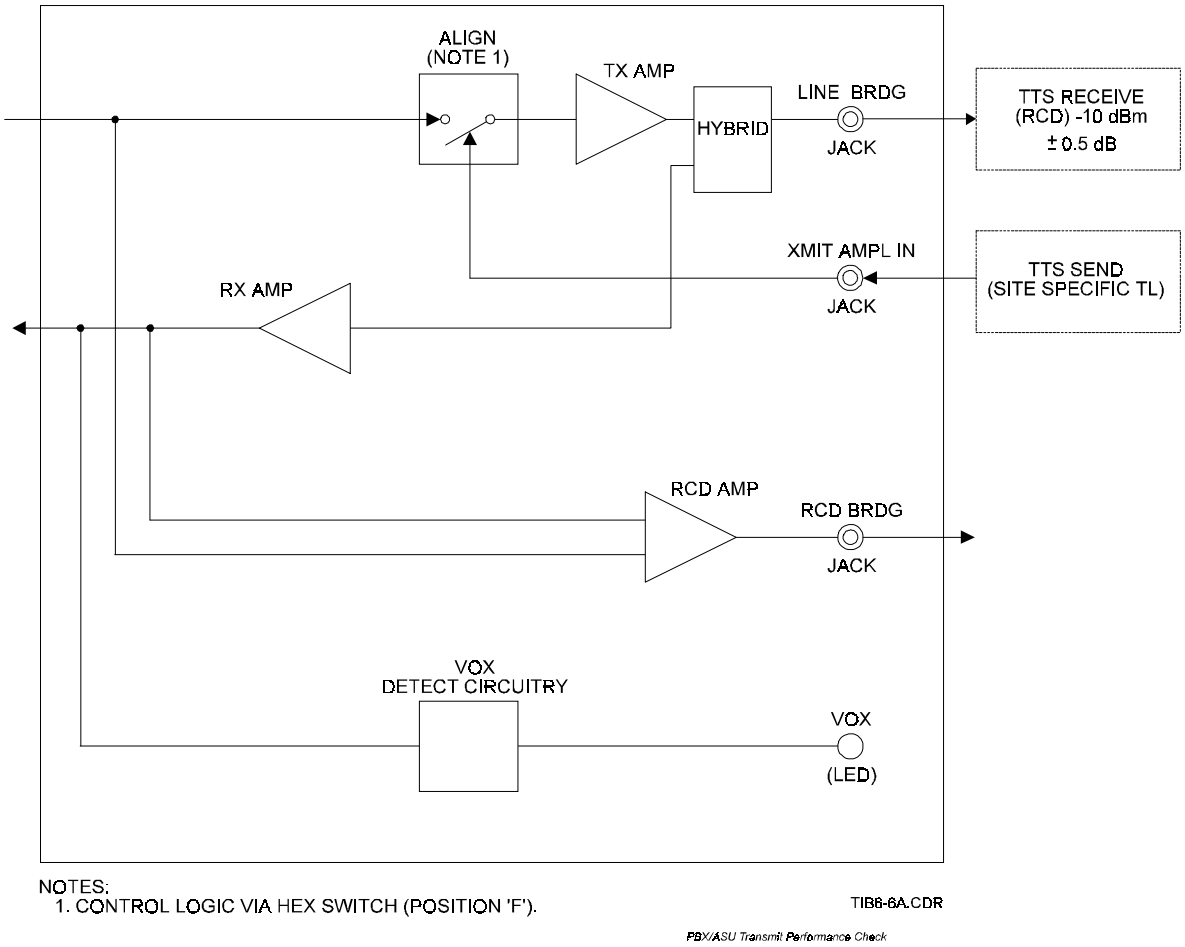


***Figure 6-7a. ASU Interface Performance Check Block Diagram (Transmit Path)***

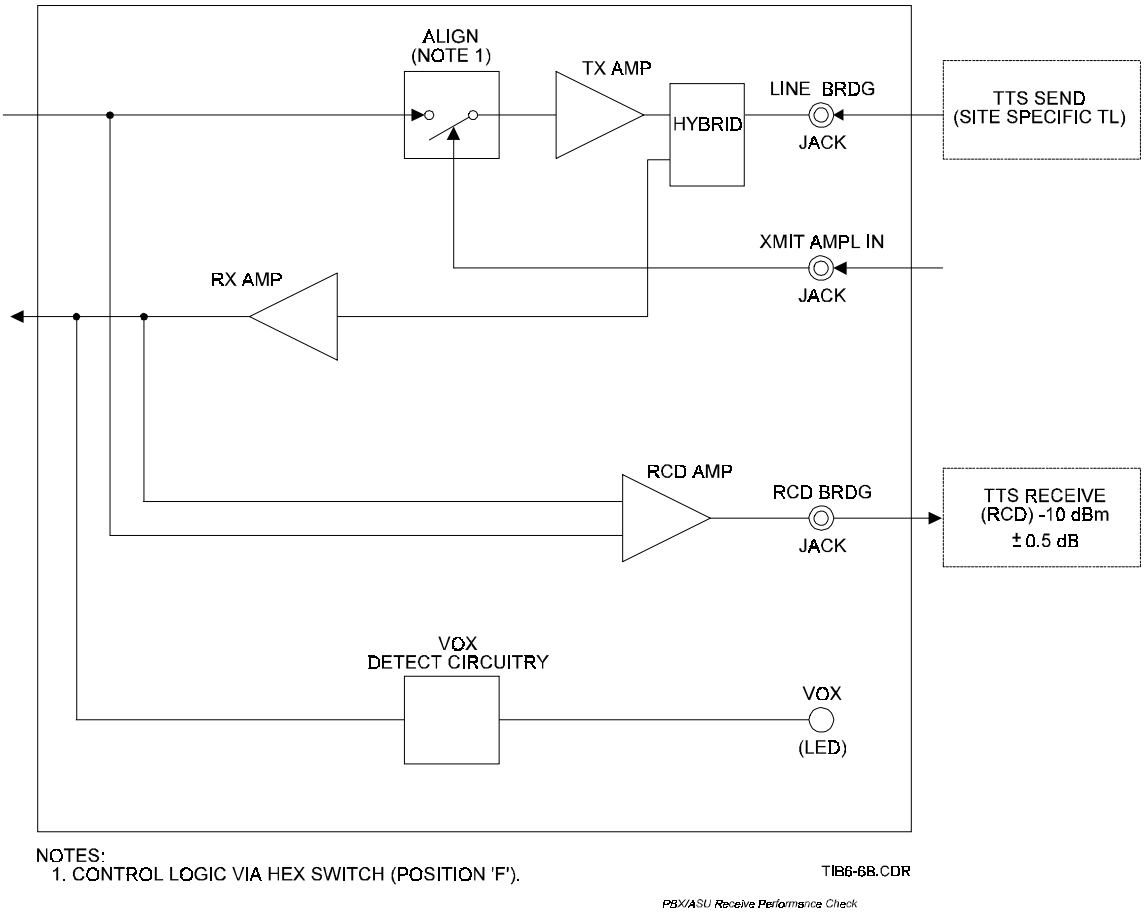


***Figure 6-7b. ASU Interface Performance Check Block Diagram (Receive Path)***

## *Table 6-14. ASU Interface Performance Check Worksheet*

| RECEIVE PATH | | | TRANSMIT PATH | | |
|---|---|---|---|---|---|
| Site-Specific TL level | LINE BRDG Input (dBm) | RCD BRDG (RCRD) (dBm) | Site-Specific TL level | XMT AMPL IN Input (dBm) | LINE BRDG (dBm) |
| +12 | +2 | -10 | +12 | -10 | +2 |
| +11 | +1 | -10 | +11 | -10 | +1 |
| +10 | 0 | -10 | +10 | -10 | 0 |
| +9 | -1 | -10 | +9 | -10 | -1 |
| +8 | -2 | -10 | +8 | -10 | -2 |
| +7 | -3 | -10 | +7 | -10 | -3 |
| +6 | -4 | -10 | +6 | -10 | -4 |
| +5 | -5 | -10 | +5 | -10 | -5 |
| +4 | -6 | -10 | +4 | -10 | -6 |
| +3 | -7 | -10 | +3 | -10 | -7 |
| +2 | -8 | -10 | +2 | -10 | -8 |
| +1 | -9 | -10 | +1 | -10 | -9 |
| 0 TL | -10 | -10 | 0 TL | -10 | -10 |
| -1 | -11 | -10 | -1 | -10 | -11 |
| -2 | -12 | -10 | -2 | -10 | -12 |
| -3 | -13 | -10 | -3 | -10 | -13 |
| -4 | -14 | -10 | -4 | -10 | -14 |
| -5 | -15 | -10 | -5 | -10 | -15 |
| -6 | -16 | -10 | -6 | -10 | -16 |
| -7 | -17 | -10 | -7 | -10 | -17 |
| -8 | -18 | -10 | -8 | -10 | -18 |
| -9 | -19 | -10 | -9 | -10 | -19 |
| -10 | -20 | -10 | -10 | -10 | -20 |
| -11 | -21 | -10 | -11 | -10 | -21 |
| -12 | -22 | -10 | -12 | -10 | -22 |
| -13 | -23 | -10 | -13 | -10 | -23 |
| -14 | -24 | -10 | -14 | -10 | -24 |
| -15 | -25 | -10 | -15 | -10 | -25 |
| -16 | -26 | -10 | -16 | -10 | -26 |

### 6.3.2.6 E&M Interface

CAUTION

Before undertaking these procedures, ensure that the associated communications channel is idle. Otherwise, disruption or interruption of communications will occur.

NOTE

All tests must be performed with the input and output circuits disconnected from any active telephone circuit. Remove demarc clips, if necessary.

6.3.2.6.1 Test Equipment and Setup

**Figure 6-8a** presents a simplified diagram covering the transmit path of the performance check; **Figure 6-8b** provides a similar diagram for the receive path.

a) Equipment

Card audio level checks require the following equipment:

- Small flat-tip screwdriver or alignment tool
- Test cables
- HP TIMS 4934A (or equivalent TTS)
- Extender Card (4U card type, part # 120933-001)

b) Setup (see **Table 6-15**)

***Table 6-15. E&M Audio Level Performance Check Setup***

| AUDIO LEVEL PERFORMANCE CHECK SETUP | TIMS |
|---|---|
| Level | Site-dependent (see **Tables 6-16a & b**) |
| Frequency | 1004 Hz |
| Impedance | 600 ohms |
| Terminated/Bridged Connection | Terminated |

**NOTE:** Refer to **Table 5-13** for site-specific jumper/strapping settings.

6.3.2.6.2 Level Checks

1. Remove demarc clips (if necessary).
2. Remove card to be checked.
3. Note and record the current position of the device-type rotary switch (S1). This setting will be restored when alignment has been completed.

4. Using the alignment tool, set the device-type rotary switch to ‘F.’ This places the card into **alignment** mode.
5. Place card into extender card, then insert extender card into slot.
6. Perform the following performance checks.

a) Receive Level

1. Set the TIMS for 600 ohms terminated.
2. Referring to **Table 6-16a**, locate, in the ‘Receive Path—Site-specific TL Level’ column, the site-specific TL value. Set the TIMS output per the level given in the ‘RCV BRDG Input (dBm)’ column that corresponds to the site-specific TL level. Set the frequency on the TIMS to 1004 Hz.
3. Connect the TIMS send channel to the **RCV BRDG** front panel jack.
4. Connect the TIMS receive channel to the **RCD BRDG** front panel jack.
5. The observed readout at output (RCD) jack should be -10 dBm ±0.5 dB for the output at the RCD jack. If not, maintenance personnel should perform alignment in accordance with procedures in paragraph 6.6.5.5 for the E&M card.

b) Transmit Level

1. Set the TIMS for 600 ohms terminated.
2. Set the output level to -10 dBm at 1004 Hz.
3. Connect the TIMS send channel to the **RCV BRDG** front panel jack.
4. Connect the TIMS receive channel to the **XMT BRDG** front panel jack.
5. Verify that the observed transmit dBm level agrees with that listed in the performance check worksheet of **Table 6-16a**. As determined by the site-specific level from column 1 of transmit path, the TIMS readout should be within ±0.5 dB of the corresponding level from XMT BRDG in column 3 (XMT BRDG). If not within tolerance, maintenance personnel should perform alignment in accordance with procedures in paragraph 6.6.5.5 for the E&M card.

c) Tone Detection

1. Using the alignment tool, set the device-type rotary switch (S1) to ‘2.’ This will place the card into ‘tone-on-active’ mode when card has been reset (step 2).
2. Remove card and quickly reinsert to effect device type change.
3. Set the TIMS for 600 ohms termination.

4. Set the TIMS output level to -23 dBm0.
5. Locate switch S2 (on card) and determine its setting. (See **Figure A-7**, Appendix A, for location of S2 on card.) Set the TIMS output frequency as follows:
   - 2400 Hz (with S2 set to position C2)
   - 2600 Hz (with S2 set to position C1)
6. Connect the TIMS send channel to the RCV BRDG front panel jack.
7. Check that the Green TONE DET LED is illuminated. Record whether check passed or failed on the worksheet of **Table 6-16b**.
8. Set the TIMS output level to -33 dBm0.
9. Check that the Green TONE DET LED is extinguished. Record whether check passed or failed on the worksheet of **Table 6-16b**.
10. If either performance check failed, replace card per the removal/ replacement procedures of paragraph 6.5.3. If both performance checks pass, proceed to step d. If card fails one or both checks, replace card.

d) Tone Generation

1. Set the TIMS for 600 ohms termination.
2. Connect the TIMS receive channel to the XMT BRDG front panel jack.
3. At the position, select the E&M under test.
4. Verify that the output level reads -20 dBm0 ±2 dBm.
5. Verify that the frequency reads 2600 ±15 Hz (S2 set to C1) or 2400 Hz ±15 Hz (S2 set to C2).

6.3.2.6.3 Placing Card Back into Operation

If the previous steps have all been completed successfully, perform following steps:

1. Disconnect all test cables.
2. Remove card from extender.
3. Remove extender card.
4. Restore original setting of device-type rotary switch (S1).
5. Reinstall card (i.e., slide the card back into its card cage slot and push all the way in so that the card is firmly secured in the edge connector). This action restores card state to original operation.
6. Restore demarc clips (if necessary).

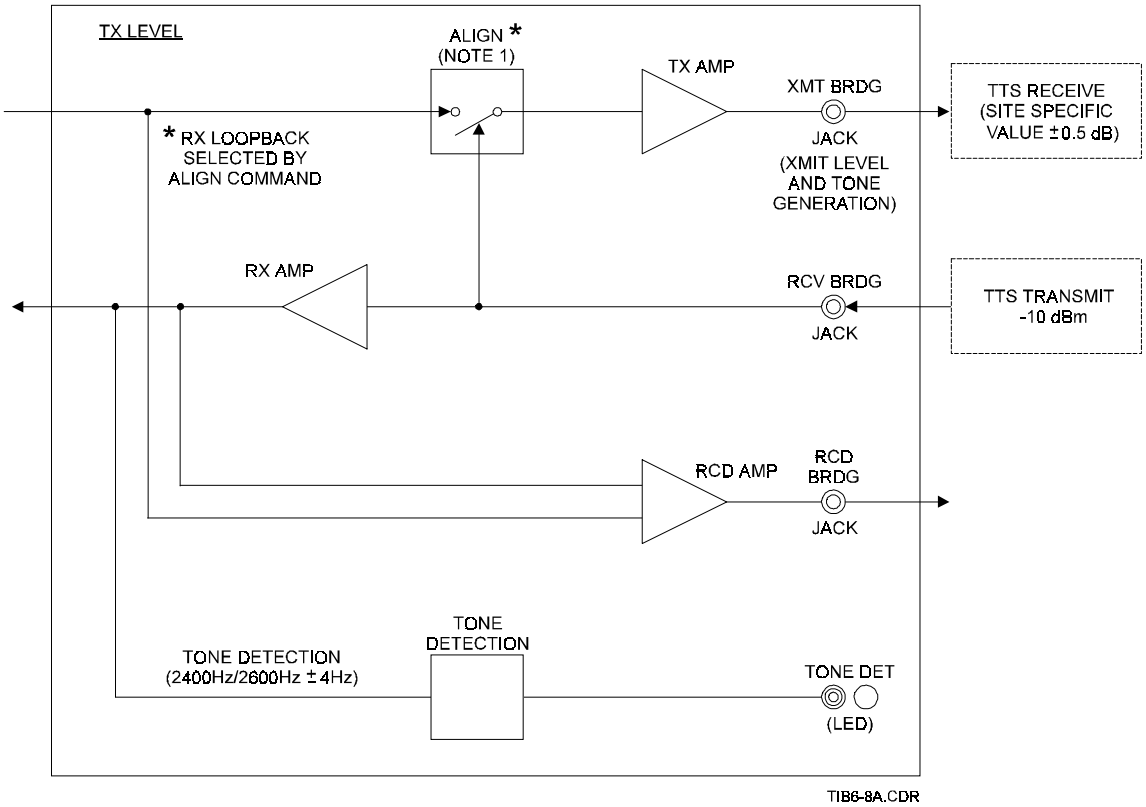


NOTES:
1. CONTROL LOGIC VIA HEX SWITCH (POSITION 'F').

***Figure 6-8a. E&M Performance Check Block Diagram (Transmit Path)***

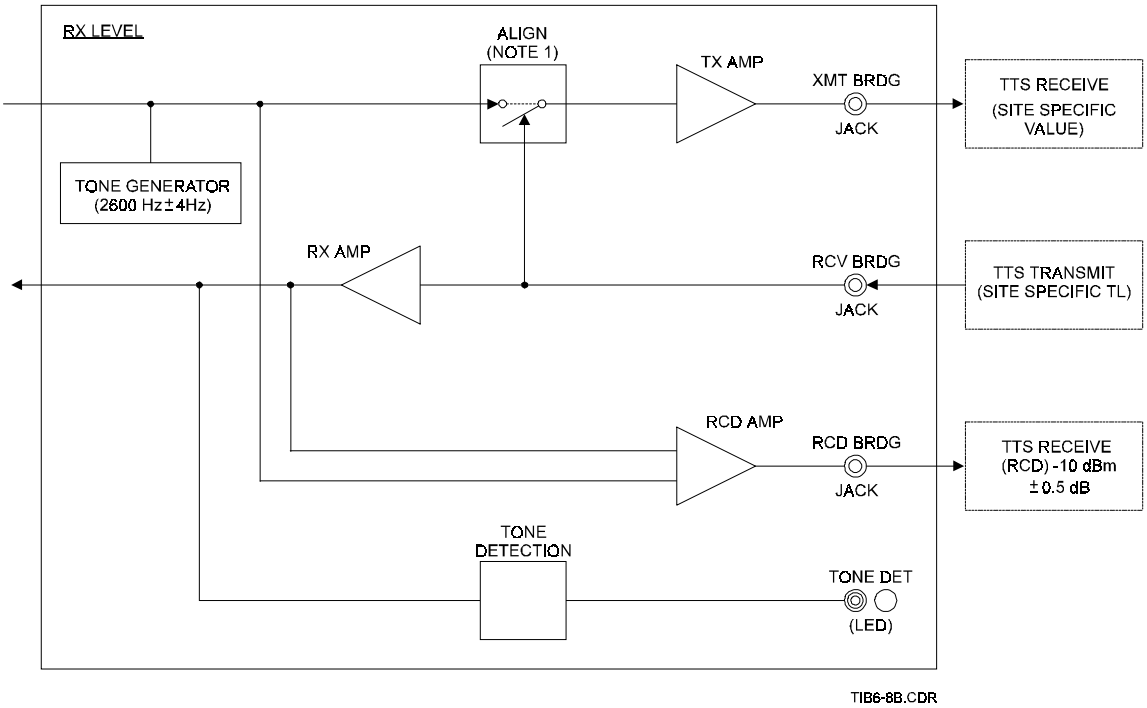


NOTES:
1. CONTROL LOGIC VIA HEX SWITCH (POSITION 'F' FOR ALIGN COMMAND)

***Figure 6-8b. E&M Performance Check Block Diagram (Receive Path)***

## *Table 6-16a. E&M Performance Check Worksheet*

| RECEIVE PATH | | | TRANSMIT PATH | | |
|---|---|---|---|---|---|
| Site-Specific TL level | RCV BRDG Input (dBm) | RCD BRDG (RCRD) (dBm) | Site-Specific TL level | RCV BRDG Input (dBm) | XMIT BRDG (dBm) |
| +12 | +2 | -10 | +12 | -10 | +2 |
| +11 | +1 | -10 | +11 | -10 | +1 |
| +10 | 0 | -10 | +10 | -10 | 0 |
| +9 | -1 | -10 | +9 | -10 | -1 |
| +8 | -2 | -10 | +8 | -10 | -2 |
| +7 | -3 | -10 | +7 | -10 | -3 |
| +6 | -4 | -10 | +6 | -10 | -4 |
| +5 | -5 | -10 | +5 | -10 | -5 |
| +4 | -6 | -10 | +4 | -10 | -6 |
| +3 | -7 | -10 | +3 | -10 | -7 |
| +2 | -8 | -10 | +2 | -10 | -8 |
| +1 | -9 | -10 | +1 | -10 | -9 |
| 0 TL | -10 | -10 | 0 TL | -10 | -10 |
| -1 | -11 | -10 | -1 | -10 | -11 |
| -2 | -12 | -10 | -2 | -10 | -12 |
| -3 | -13 | -10 | -3 | -10 | -13 |
| -4 | -14 | -10 | -4 | -10 | -14 |
| -5 | -15 | -10 | -5 | -10 | -15 |
| -6 | -16 | -10 | -6 | -10 | -16 |
| -7 | -17 | -10 | -7 | -10 | -17 |
| -8 | -18 | -10 | -8 | -10 | -18 |
| -9 | -19 | -10 | -9 | -10 | -19 |
| -10 | -20 | -10 | -10 | -10 | -20 |
| -11 | -21 | -10 | -11 | -10 | -21 |
| -12 | -22 | -10 | -12 | -10 | -22 |
| -13 | -23 | -10 | -13 | -10 | -23 |
| -14 | -24 | -10 | -14 | -10 | -24 |
| -15 | -25 | -10 | -15 | -10 | -25 |
| -16 | -26 | -10 | -16 | -10 | -26 |

## *Table 6-16b. E&M Tone Generation/Detection Performance Check Worksheet*

| TONE GENERATION | | | | | TONE DETECTION @ 2400/2600 HZ for Incoming RX | |
|---|---|---|---|---|---|---|
| Test No. | Slot No. | S/N, P/N | Transmit (TX) (-20 dBm0) | Recorded Level (Observed) | TONE DET LED ON @ -23 dBm0 | TONE DET LED OFF @ -33 dBm0 |
| 1 | | | -20 dBm0 ± 2 dB | | | |
| 2 | | | -20 dBm0 ± 2 dB | | | |
| 3 | | | -20dBm0 ± 2 dB | | | |
| 4 | | | -20 dBm0 ± 2 dB | | | |
| 5 | | | -20 dBm0 ± 2 dB | | | |
| 6 | | | -20 dBm0 ± 2 dB | | | |
| 7 | | | -20 dBm0 ± 2 dB | | | |
| 8 | | | -20 dBm0 ± 2 dB | | | |
| 9 | | | -20 dBm0 ± 2 dB | | | |
| 10 | | | -20 dBm0 ± 2 dB | | | |
| 11 | | | -20 dBm0 ± 2 dB | | | |
| 12 | | | -20 dBm0 ± 2 dB | | | |
| 13 | | | -20 dBm0 ± 2 dB | | | |
| 14 | | | -20 dBm0 ± 2 dB | | | |
| 15 | | | -20 dBm0 ± 2 dB | | | |
| 16 | | | -20 dBm0 ± 2 dB | | | |
| 17 | | | -20 dBm0 ± 2 dB | | | |
| 18 | | | -20 dBm0 ± 2 dB | | | |
| 19 | | | -20 dBm0 ± 2 dB | | | |
| 20 | | | -20 dBm0 ± 2 dB | | | |
| 21 | | | -20 dBm0 ± 2 dB | | | |
| 22 | | | -20 dBm0 ± 2 dB | | | |
| 23 | | | -20 dBm0 ± 2 dB | | | |
| 24 | | | -20 dBm0 ± 2 dB | | | |
| 25 | | | -20 dBm0 ± 2 dB | | | |

Legend: ✓ = Passed x = Failed

TIB6-61.CDR

### 6.3.2.7 SS-1/SS-4 Interface

CAUTION

Before undertaking these procedures, ensure that the associated communications channel is idle. Otherwise, disruption or interruption of communications will occur.

CAUTION

This card contains ESD-sensitive devices. Use proper handling at all times.

NOTE

All tests must be performed with the input and output circuits disconnected from any active telephone circuit. Remove demarc clips, if necessary.

#### 6.3.2.7.1 Test Equipment and Setup

**Figure 6-9a** presents a simplified diagram covering the transmit path of the performance check; **Figure 6-9b** provides a similar diagram for the receive path.

a) Equipment

Card audio level checks require the following equipment:

- Small flat-tip screwdriver or alignment tool (GC Electronics ‘Combination Aligner...’ Cat. #8275 or similar)
- Test cables
- Extender Card (4U card type, part # 120933-001)
- HP TIMS 4934A (or equivalent TTS)

b) Setup (see **Table 6-17**)

***Table 6-17. SS-1/SS-4 Audio Level Performance Check Setup***

| AUDIO LEVEL PERFORMANCE CHECK SETUP | TIMS |
|---|---|
| Level | Site-dependent (see **Table 6-18**) |
| Frequency | 1004 Hz |
| Impedance | 600 ohms |
| Terminated/Bridged Connection | Terminated |

6.3.2.7.2 Level Checks

1. Remove demarc clips (if necessary).
2. Remove card to be checked.
3. Note and record the current position of the device-type rotary switch (S1) installed on card. This setting will be restored when alignment has been completed.

CAUTION

For the test tones to be generated, this card must have the hex rotary switch in position 'F' during power-up or a reset. This sets the processor into test mode, which will allow it to generate the dial tones for measurement. Refer to check in paragraph 6.3.2.7.2, item e), below.

4. Using the flat-tip screwdriver or alignment tool, set the device-type rotary switch (S1) to 'F.' This places the card into **alignment** mode.
5. Place card into extender card.
6. Place extender card (part # 120933-001) into slot.
7. Perform the following level checks.

a) Receive Level

1. Set the TIMS for 600 ohms terminated.

2. Referring to **Table 6-18**, locate, in the 'Receive Path—Site-specific TL Level' column, the site-specific TL value. Set the TIMS output per the level given in the 'RCV BRDG Input (dBm)' column that corresponds to the site-specific TL level. Set the frequency on the TIMS to 1004 Hz.
3. Connect the TIMS send channel to the **RCV BRDG** front panel jack.
4. Connect the TIMS receive channel to the **RCD BRDG** front panel jack.
5. The observed readout should be -10 dBm ±0.5 dB for the output at the RCD jack. If not, maintenance personnel should perform alignment in accordance with procedures in paragraph 6.6.5.6 for the SS-1/SS-4 card.

b) Transmit Level

1. Set the TIMS for 600 ohms terminated.
2. Set the output level to -10 dBm at 1004 Hz.
3. Connect the TIMS send channel to the RCV BRDG front panel jack.
4. Connect the TIMS receive channel to the XMT BRDG front panel jack.
5. Verify that the observed transmit dBm level agrees with that listed in the performance check worksheet of **Table 6-18**. As determined by the site-specific level from column 1 of transmit path, the TIMS readout should be within ±0.5 dB of the corresponding level from XMT BRDG in column 3 (XMT BRDG). If not within tolerance, maintenance personnel should perform corrective maintenance alignment in accordance with the procedure in paragraph 6.6.5.6 for the SS-1/SS-4 card.

NOTE

The purpose and use of the VOX detect circuit are explained in paragraph 5.4.4. VOX detect performance is checked following the procedure of part c) below.

c) VOX Detect

1. Set the TIMS for 600 ohms terminated.
2. Set the output frequency to 1004 Hz.
3. Set the TIMS output level to -22 dBm0.
4. Connect the TIMS send (transmit) channel to the RCV BRDG front panel jack.
5. Check that the green VOX LED is illuminated. Record whether check passed or failed on the worksheet of **Table 6-19**.

6. Set the TIMS output level to -28 dBm0.
7. Check that the LED is extinguished. Record whether check passed or failed on the worksheet of **Table 6-19**.
8. If either performance check failed, replace card per the removal/replacement procedure of paragraph 6.5.3.

NOTE

The function and purpose of the Tone Detection and Tone Generation circuitry are explained in paragraph 5.4.4. Tone detection and tone generation performance is checked following the procedures of parts d) and e) below.

d) Tone Detection

1. Set the TIMS for 600 ohms terminated.
2. Set the TIMS output frequency to 2600 Hz.
3. Connect the TIMS send (transmit) channel to the RCV BRDG front panel jack.
4. Set the TIMS output level per the output level provided in the worksheet of **Table 6-20**.
5. Check that the green RCV DIAL LED is continuously illuminated. This indicates test tone is being detected. In the “Observed” column mark a ✓ or X to indicate check passed or failed.

CAUTION

Card must be plugged into extender card with S1 set to 'F' before starting the following Tone Generation procedure.

e) Tone Generation

1. Check that the TIMS is set for 600 ohms terminated.
2. Connect the TIMS receive channel to the XMT BRDG front panel jack.
3. Using the alignment tool, set the device-type rotary switch to ‘1.’
4. The TIMS should indicate a 2600±4-Hz tone with a level as shown in the performance check worksheet of **Table 6-20**.
5. Using the alignment tool, set the device-type rotary switch to ‘3.’

6. The TIMS should indicate a 2400 ±4Hz tone with a level as shown in the performance check worksheet of **Table 6-20**.

#### 6.3.2.7.3 Placing Card Back Into Operation

If the previous steps have all been completed successfully, perform the following steps:

1. Disconnect all test cables.
2. Remove card and extender card from slot.
3. Remove card from extender card.
4. Restore original setting of device-type rotary switch (S1).
5. Reinstall card (i.e., slide the card back into the card cage slot and push all the way in so that the card is firmly secured in its edge connector). This action restores card state to original operation.
6. Restore demarc clips (if necessary).

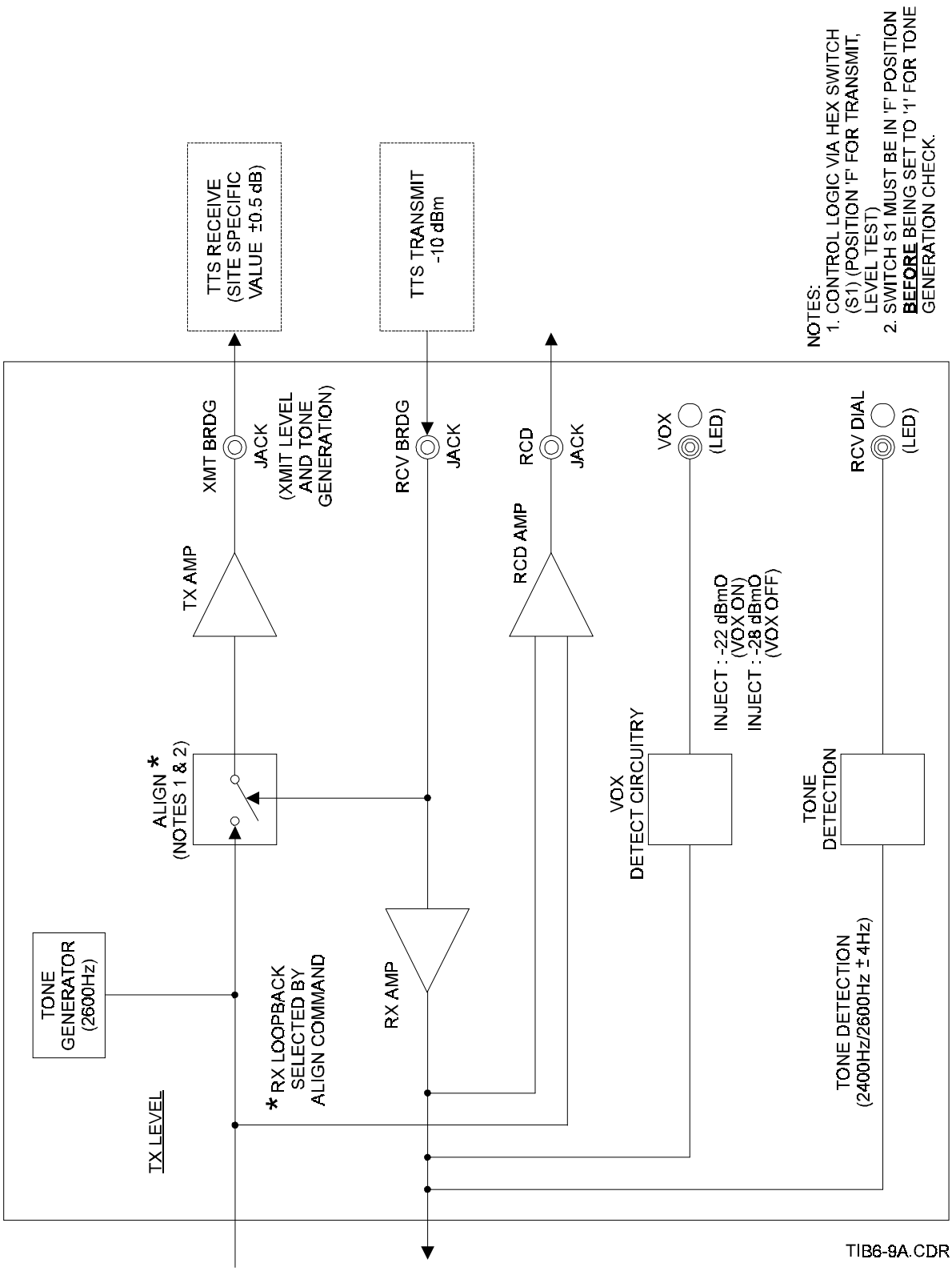


*Figure 6-9a. SS-1/SS-4 Performance Check Block Diagram (Transmit Path)*

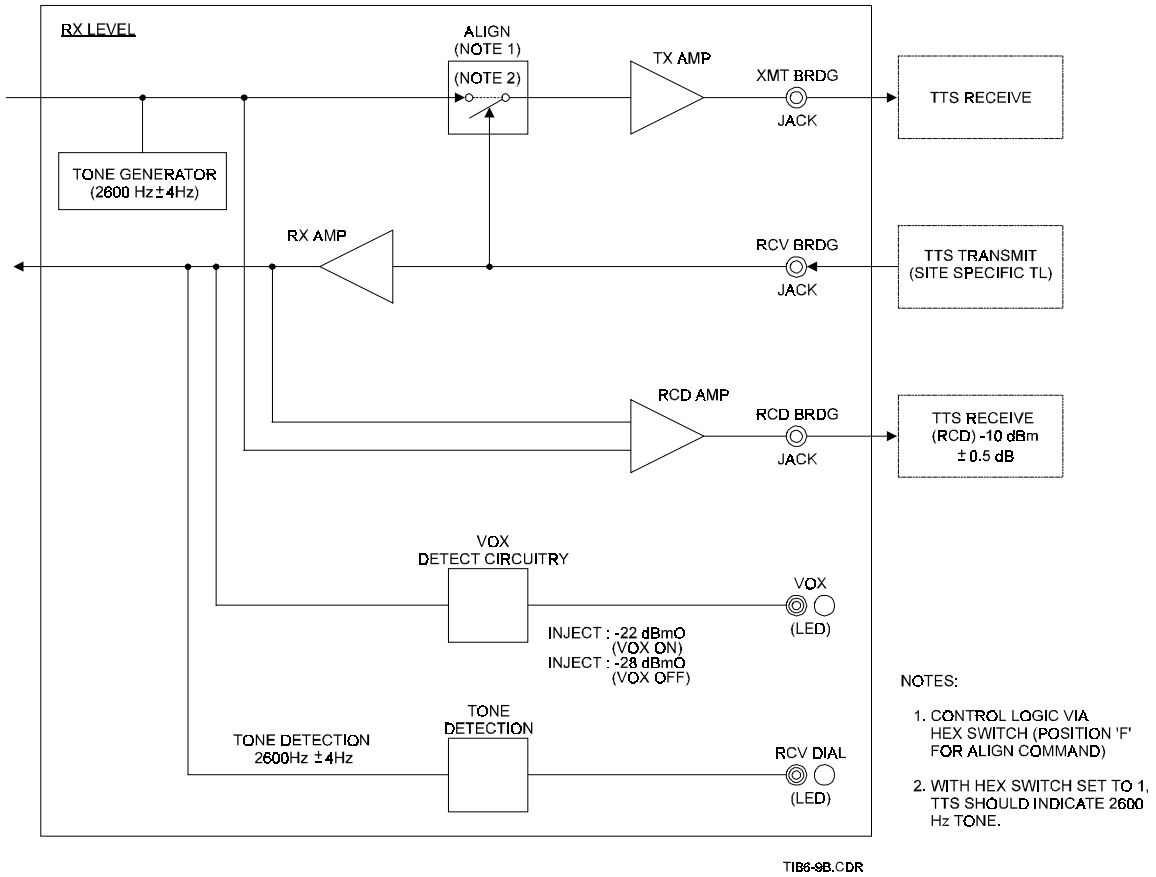


***Figure 6-9b. SS-1/SS-4 Performance Check Block Diagram (Receive Path)***

## *Table 6-18. SS-1/SS-4 Performance Check Worksheet*

| RECEIVE PATH | | | TRANSMIT PATH | | |
|---|---|---|---|---|---|
| Site-Specific TL level | RCV BRDG Input (dBm) | RCD BRDG (RCRD) (dBm) | Site-Specific TL level | RCV BRDG Input (dBm) | XMIT BRDG (dBm) |
| +12 | +2 | -10 | +12 | -10 | +2 |
| +11 | +1 | -10 | +11 | -10 | +1 |
| +10 | 0 | -10 | +10 | -10 | 0 |
| +9 | -1 | -10 | +9 | -10 | -1 |
| +8 | -2 | -10 | +8 | -10 | -2 |
| +7 | -3 | -10 | +7 | -10 | -3 |
| +6 | -4 | -10 | +6 | -10 | -4 |
| +5 | -5 | -10 | +5 | -10 | -5 |
| +4 | -6 | -10 | +4 | -10 | -6 |
| +3 | -7 | -10 | +3 | -10 | -7 |
| +2 | -8 | -10 | +2 | -10 | -8 |
| +1 | -9 | -10 | +1 | -10 | -9 |
| 0 TL | -10 | -10 | 0 TL | -10 | -10 |
| -1 | -11 | -10 | -1 | -10 | -11 |
| -2 | -12 | -10 | -2 | -10 | -12 |
| -3 | -13 | -10 | -3 | -10 | -13 |
| -4 | -14 | -10 | -4 | -10 | -14 |
| -5 | -15 | -10 | -5 | -10 | -15 |
| -6 | -16 | -10 | -6 | -10 | -16 |
| -7 | -17 | -10 | -7 | -10 | -17 |
| -8 | -18 | -10 | -8 | -10 | -18 |
| -9 | -19 | -10 | -9 | -10 | -19 |
| -10 | -20 | -10 | -10 | -10 | -20 |
| -11 | -21 | -10 | -11 | -10 | -21 |
| -12 | -22 | -10 | -12 | -10 | -22 |
| -13 | -23 | -10 | -13 | -10 | -23 |
| -14 | -24 | -10 | -14 | -10 | -24 |
| -15 | -25 | -10 | -15 | -10 | -25 |
| -16 | -26 | -10 | -16 | -10 | -26 |

***Table 6-19. SS-1/SS-4 VOX Detection Performance Check Worksheet***

| Test No. | Slot No. | S/N, P/N | Telephone Card VOX On @ -22 dBm0 | Telephone Card VOX Off @ -28 dBm0 |
|---|---|---|---|---|
| 1 | | | | |
| 2 | | | | |
| 3 | | | | |
| 4 | | | | |
| 5 | | | | |
| 6 | | | | |
| 7 | | | | |
| 8 | | | | |
| 9 | | | | |
| 10 | | | | |
| 11 | | | | |
| 12 | | | | |
| 13 | | | | |
| 14 | | | | |
| 15 | | | | |
| 16 | | | | |
| 17 | | | | |
| 18 | | | | |
| 19 | | | | |
| 20 | | | | |
| 21 | | | | |
| 22 | | | | |
| 23 | | | | |
| 24 | | | | |
| 25 | | | | |
| 26 | | | | |
| 27 | | | | |
| 28 | | | | |
| 29 | | | | |
| 30 | | | | |

Legend: ✓ = Passed
x = Failed

## *Table 6-20. SS-1/SS-4 Tone Generation/Detection Performance Check Worksheet*

| TONE GENERATION | | | | | TONE DETECTION @ 2600 HZ for Incoming RX | |
|---|---|---|---|---|---|---|
| Test No. | Slot No. | S/N, P/N | Transmit (TX) (-6 dBm0 to -10 dBm0) | Recorded Level (Observed) | RCV DIAL LED ON @ -20 dBm0 | RCV DIAL LED OFF @ -30 dBm0 |
| 1 | | | -8 dBm0 ± 2 dB | | | |
| 2 | | | -8 dBm0 ± 2 dB | | | |
| 3 | | | -8 dBm0 ± 2 dB | | | |
| 4 | | | -8 dBm0 ± 2 dB | | | |
| 5 | | | -8 dBm0 ± 2 dB | | | |
| 6 | | | -8 dBm0 ± 2 dB | | | |
| 7 | | | -8 dBm0 ± 2 dB | | | |
| 8 | | | -8 dBm0 ± 2 dB | | | |
| 9 | | | -8 dBm0 ± 2 dB | | | |
| 10 | | | -8 dBm0 ± 2 dB | | | |
| 11 | | | -8 dBm0 ± 2 dB | | | |
| 12 | | | -8 dBm0 ± 2 dB | | | |
| 13 | | | -8 dBm0 ± 2 dB | | | |
| 14 | | | -8 dBm0 ± 2 dB | | | |
| 15 | | | -8 dBm0 ± 2 dB | | | |
| 16 | | | -8 dBm0 ± 2 dB | | | |
| 17 | | | -8 dBm0 ± 2 dB | | | |
| 18 | | | -8 dBm0 ± 2 dB | | | |
| 19 | | | -8 dBm0 ± 2 dB | | | |
| 20 | | | -8 dBm0 ± 2 dB | | | |
| 21 | | | -8 dBm0 ± 2 dB | | | |
| 22 | | | -8 dBm0 ± 2 dB | | | |
| 23 | | | -8 dBm0 ± 2 dB | | | |
| 24 | | | -8 dBm0 ± 2 dB | | | |
| 25 | | | -8 dBm0 ± 2 dB | | | |

Legend: ✓ = Passed x = Failed

TIB6-71.CDR

### 6.3.3 Other Performance Checks

Paragraph 6.3.3 contains performance checks for equipment which are factory aligned (adjusted) prior to their installation in the ETVS system. These units have critical adjustments that should not be made in the field under any circumstances; however, they should, when on-line and in operation, be checked periodically to determine if the equipment is operating properly (i.e., within required tolerance) or needs corrective alignment adjustments. In addition, such checks can be made any time the performance of these units becomes suspect. Equipment covered includes the power supply modules, low voltage battery disconnect unit, low voltage disconnect delayed-start load (connect) units, uninterruptable power supplies for the SCTs/MCTs work stations and remote servers, and position equipment. In addition, there are procedures for changing the time and date on the Gateway PC, end-to-end audio check, and legal record check. If a performance check determines that a particular unit (LRU) is not operating properly or is not operating within specified performance tolerances, the unit is replaced with another unit in accordance with the standard LRU maintenance philosophy and per the replacement procedures in section 6.5.

#### 6.3.3.1 Power Supply Modules (Central Equipment Rack/Full Height Remote Power Rack)

There are two versions of the power supply module used in this system. The performance checks for these units consist of (1) measuring output voltage and current, and (2) checking the front panel status indicators. Each power supply module front panel consists of one of the following: an LCD display and a VOLTS/AMPS toggle switch; or a pair of voltage test points and a 10-segment LED bar graph display. The bar graph display indicates output current (each illuminated LED representing 12.5A, which is equal to 1/10 of the maximum output current). The front panel indicators are used to perform voltage and current status checks. Each type of power supply unit also has AC ON and FAULT LEDs to provide operational status.

NOTE

The power supply with the LCD display and the other power supply with voltage test points provide power supply output voltage prior to an output protection diode. This voltage at the module may not match the voltage present on the power bus bars (located in the back of the racks).

Power supply modules are used both in the Central Rack and the optional full height remote power rack.

6.3.3.1.1 Voltage/Current Output Checks

NOTE

A standard calibrated voltmeter is required to perform one of the following tests, as stated in a) 1.

*a) Voltage Level*

1. Depending on the style of power supply module, do one of the following:
   - Place VOLTS/AMPS toggle switch to VOLTS position.

     *or*

   - Place probes from a voltmeter into front panel test points below bar graph display. The front panel voltage test points output a voltage which is 1/10 of the actual power supply voltage. The power supply voltage is obtained by multiplying the voltmeter's displayed value by 10.
2. Determine module output voltage and record this value. Verify that the voltage level is within required tolerance (i.e., +24 VDC to +28 VDC initial and operating output voltage range). The nominal, or standard, output voltage is 27.5 VDC, which is factory preset. (See **Table C-1**.)
3. Repeat steps 1 and 2 for all power supply modules in the central equipment rack or remote power rack, as applicable.
4. If any test power supply modules fails to operate within specified tolerances, replace the module per the removal/replacement procedures of paragraph 6.5.5.

*b) Current Level*

The current sharing circuit in the ETVS power supplies uses a single wire interface that is interconnected among all the power supply modules. The single wire signal is an analog voltage that is proportional to the load current. The full-scale voltage is factory trimmed to 5.5 VDC when the module is at full load. Op-amp offset errors and component tolerances in the current share circuit cause a fixed error which, as a proportion of the full-scale signal, is small. An error of less than 10% can easily be achieved, as long as the output current is high enough that the signal errors are a small fraction of the total signal. As the current share signal becomes smaller by decreasing

the load, the errors become a significant portion of the current share signal. This is not a problem since the reliability of the ETVS system running at light loads with, for example, 20% sharing, is not significantly less than that of the same system with the same load with 2% sharing. The only time reliability would suffer would be at higher to full load. Therefore, power supply modules should only be tested if the load exceeds 100 amps each.

Output current will vary according to system size and electrical loads. When measuring the output current the following test, the current output reading should differ by no more than ±15 percent near full current loads (greater than 100A) among the installed power supplies. The current variance is compared to the highest reading of all the power supplies. For example, if power supply A reads 110 amps and power supply B reads 100 amps, the variance is 110 – 100 (or 10 amps) or 9 percent of the highest current reading.

NOTE

A power supply redundancy check is provided in paragraph 6.3.3.2.

1. Depending on the style of power supply module, do one of the following:
   - Place VOLTS/AMPS toggle switch to AMPS position.

   *or*

   - Count the number of LED segments in the bar graph display illuminated.
2. Determine module output current. If module has LED bar graph, multiply the number of LED segments illuminated by 12.5A (e.g. 3x12.5 = 37.5A). Record this value.
3. Repeat steps 1 and 2 for all power supply modules in the central equipment rack (or remote power rack, as applicable).
4. If any near- to full-load supply module current varies by more than 15 percent, as specified above, replace the module per the removal/replacement procedures of paragraph 6.5.5

*c) Status Indicators (Front Panel)*

NOTE

Depending on the style of power supply module, the circuit breaker switch will

either be a black lever (up = on; down = off) or an aluminum bar with a bent end (in = on; out = off).

1. Observe AC ON and FAULT LEDs for operational status of power supply module.
   - AC ON LED will be lit Green if module is operating normally and AC power is within the operational range.
   - If AC ON LED is not lit, check the position of the AC ON switch/circuit breaker. If in the off position (see note above), power has been turned off or breaker has tripped. If the breaker has tripped, there may have been and may still be an input overvoltage condition. Maintenance personnel should first verify that the module input voltage is within operational ranges (facility breakers may also be tripped), then attempt to turn on the module. If AC ON LED still fails to light, replace unit per paragraph 6.5.5.
   - FAULT LED (Yellow or Amber) should not be lit. If the LED lights, this indicates a summary fault alarm and is caused by one of the following conditions: an output overvoltage shutdown, current limit condition, over-temperature shutdown, or another fault resulting in a low output voltage.

NOTE

Shutdown of unit occurs if the output voltage exceeds 30V. Input power must be turned off and then back on to restore power and reset the circuit. If output voltage continues to exceed 30V, the unit must be replaced.

Shutdown can also occur if an internal thermostat's temperature exceeds 100°C. Recovery is automatic when the unit cools. The FAULT LED will be lit during this period. If, however, the power supply fails to recover, it must be replaced.

2. Depending upon the nature of the fault, and if the FAULT LED remains lit, replace unit per procedure of paragraph 6.5.5.
3. Check status of all power supply modules in central rack, repeating steps 1 and 2.

### 6.3.3.2 Power Supply Redundancy Test

NOTE

A standard calibrated voltmeter is required to perform the following test.

CAUTION

The power bus bars are capable of delivering large currents if shorted.

1. Using a voltmeter, measure system voltage; verify that the reading on the voltmeter is 27.5V ±10%. To access system power, the voltmeter may be connected to the power bus bars located inside the rear of each rack, mounted vertically (positive on the left and negative on the right).
2. Turn off the power switch on power supply #1. The System fault LED should turn Red, and the audible alarm should sound at the SAP and the SCT/MCT. Press the alarm reset button on the SAP to stop audible alarm. The Main Power fault LED at the SAP and the Main Power icon on the SCT/MCT monitor should remain Green. (All systems are designed with an n+1 power supply redundancy. The loss of two modules is required before a main power fault will be indicated.)

NOTE

Power supply numbering starts with the left-most power supply (top-left for systems with two power supply module cages).

3. Check that the system voltage is still 27.5V ±10%. Verify that the front panel FAULT LED is Off (i.e., not Amber) for all remaining power supplies.
4. Turn on the power supply and, if there are no other system faults, wait for the system fault to clear (i.e., System fault LED turns Green).
5. Repeat steps 2 through 4 for the remaining power supplies.

#### 6.3.3.3 Low Voltage Disconnect (LVD) Panels

In the event of an LVD failure or malfunction, maintenance action should be to contact Second Level Support for assistance.

NOTE

Both the central rack and the remote power rack have Low Voltage Disconnect panels. In the central rack, there are two versions of this panel: battery connect LVD and delayed start load (load connect) LVD. The remote rack has a battery LVD only. Except for certain specific system (circuit) functions, wiring connections, and the Low Voltage DC Sensing PC Board, the LVD panels are identical. The battery LVD is connected in the charge path between the central rack/remote rack power supplies and the batteries; the load connect units are used by the ETVS power distribution system to connect the central rack power supplies and the reserve power battery supply. This performance check applies to both LVD versions.

NOTE

For this procedure, the unit must be on-line (AC power on) with the front panel NORMAL/MANUAL OVERRIDE mode selector switch in the NORMAL position and the LOAD CONNECTED lamp illuminated GREEN. During normal operation, if the battery voltage should drop below a preset value for more than 8 to 10 seconds, the LOAD CONNECTED lamp should go out; the relay on the Low-Voltage DC Sensing PC Board transfers its contacts. This de-energizes (opens) a contactor disconnecting the load from the battery voltage and extinguishing the LED. Once the battery voltage level reaches a preset value for connect (pickup) voltage, the delayed connect panels connect the system load to the power supply/battery output (and LOAD CONNECTED LED illuminates).

To check the operational status of an LVD panel, proceed as follows:

1. Open rear door to gain access to panels.
2. With the NORMAL/MANUAL OVERRIDE mode selector still in its NORMAL position, remove Fuse F1 (labeled Fuse 1 AMP) from front panel.
3. Observe that the LOAD CONNECTED LED extinguishes and the contactor opens (should hear a “klunking” sound). Also, the system fuse alarm sounds.
4. Place NORMAL/MANUAL OVERRIDE selector switch to MANUAL OVERRIDE; the LOAD CONNECTED LED should illuminate, and the contactor should close (a “klunking” sound should be heard). If it does not, the LVD unit has an internal circuit problem and must be replaced. Contact Second Level maintenance support personnel for this maintenance service.
5. Switch selector back to NORMAL position, observing that the LOAD CONNECTED LED again goes out, and the contactor opens (again, a “klunking” sound should be heard).
6. Replace panel fuse F1. Observe that LOAD CONNECTED LED again illuminates and that the contacts again close.

NOTE

If the LOAD CONNECTED LED fails to illuminate/extinguish at the specified times during the procedural steps, contact Second Level Support personnel for assistance.

7. Upon completion of the procedures, close rear door.
8. In turn, check all LVD units.

### 6.3.3.4 Uninterruptable Power Supplies (UPS)

This procedure consists of two parts: (1) using the self-test feature to verify both the operation of the UPS and the condition of the battery; and (2) monitoring the front panel status indicators to determine its current operational status.

#### 6.3.3.4.1 Self-Test

NOTE

The manual self-test can be conducted at any time, using the I TEST (on/test) button on front panel.

1. With the UPS plugged into normal utility power, activate the self-test by pressing the I TEST (on/test) pushbutton until the on-line LED flashes.

NOTE

By default, the UPS performs a self-test at power up and once every two weeks (or at other selected intervals if so pre-programmed at the factory).

2. During the self-test, the UPS briefly operates the loads on-battery (the on-battery comes on GREEN). If the UPS passes the self-test, it returns to on-line operation. The on-battery LED goes off, and the on-line LED goes on (glows steady GREEN). If the UPS fails test, proceed to step 3.
3. If the UPS fails the self-test, it immediately returns to on-line operation and lights the replace battery LED. (NOTE: the UPS emits short beeps for one minute). The loads (SCT/MCT, remote server) are not affected. Follow vendor's commercial manual procedures for charging battery. (For best results, it is recommended battery be charged 2.5 hours before using again); then, repeat the self-test. If the replace battery LED is still on, replace the UPS following the procedures of paragraph 6.5.10.

NOTE

Before replacing a UPS, ensure that the SCT/MCT, remote server, etc. have been shut down in accordance with the maintenance power-down procedures of paragraph 6.4.1 to avoid corrupting or losing data. Computer systems require time to perform an orderly shutdown.

#### 6.3.3.4.2 Monitoring Status Indicators

The UPS provides visual and audible indications of various aspects of UPS operation, including: battery capacity, low-battery condition, and replace battery condition; on-

line status; load status; overload; and voltage boost and reduction. The following guidance is provided for monitoring and interpreting these status indications:

1. Load Display—The 5-LED display on the left of the front panel shows the power drawn from the UPS by the load; e.g., SCT/MCT (CPU, monitor), printer, etc. The display indicates the percentage of the UPS's rated capacity (i.e., 20%, 40%, 60%, 80%, 100% increments). For example, if three LEDs are lit, the load is drawing between 50% and 67% of the UPS's capacity.

   If all five LEDs light, thoroughly test complete system to make sure UPS will not become overloaded [e.g., test the system with all loads operating (plugged into UPS) to determine whether UPS is overloaded or not overloaded].

2. On-Line LED—This indicator comes on when UPS is supplying AC utility power to the loads (SCT/MCT, etc.). If off, no AC power is being applied to the load. Ensure all loads are switched on, then press the I TEST (on/test) button to power the UPS and the load.

3. Battery Charge Display—The 5-LED display on the right of the front panel shows the present charge of the UPS's battery as a percentage of the battery's capacity. When all five LEDs light, the battery is fully charged (i.e., 100%). This display is presented in increments of 20%, 40%, 60%, 80%, and 100%. When the lowest LED is flashing, the battery can supply less than two minutes of run time for this load.

4. Utility Voltage (Line Voltage)—The UPS has a diagnostic feature that displays the utility voltage. With the UPS plugged into the normal AC utility power, press and hold the on/test button to see the utility voltage display (5-LED display on the right of the front panel). After four seconds the display shows the input voltage in increments of 98, 107, 115, 123, and 132. For example, with three LEDs lit the input voltage is between 115 and 123 VAC. If no LEDs come on, and the UPS is, in fact, plugged into a working AC power outlet, the line voltage is extremely low; if all five LEDs are on, the line voltage is extremely high and should be checked by a facility electrician.

5. Replace Battery—The UPS emits short beeps for one minute and the replace battery LED comes on if the battery fails the self-test. The UPS repeats the alarm every five hours. Perform the self-test procedure in paragraph 6.3.3.4.1 to confirm battery condition status.

6. Low Battery—When the UPS's battery is low, the UPS beeps continuously until the UPS returns to on-line operation or shuts down because of exhausted battery. If battery fails, UPS must be replaced using the

procedures of paragraph 6.5.10. SCTs/MCTs, remote servers, etc. must be powered down before UPS is unplugged from AC receptacle.

7. Overload—The overload LED lights when the loads connected to the UPS exceed its capacity (e.g., in excess of 1000 VA/670W or 1400 VA/950W), and the UPS alarm sounds (sustained tone). The alarm remains on until the cause of the overload has been removed.
8. Other Indicators—The UPS contains other indicators that help ascertain the operational status of the UPS. These are described below:
   - Voltage Boost LED—Comes on when the UPS is correcting a low utility voltage condition. The loads receive normal power.
   - Voltage Reduction LED—Comes on when the UPS is correcting a high utility voltage condition. The loads receive normal power.
   - SITE WIRING FAULT—This UPS rear panel LED indicator comes on when the UPS is connected to an improperly wired AC power outlet. Wiring faults detected include missing ground, hot-neutral polarity reversal, and overloaded neutral circuit. This condition would normally not occur except at a new installation site. When and if this indicator should light, get an electrician to correct the building wiring.
9. All Front Panel Indicators Lit—If all front panel indicator LEDs are lit at the same time, the UPS alarm sounds (constant tone). This indicates the UPS has an internal fault and should not be further used. Immediately power down the affected SCT/MCT, remote servers, and printers that are served by this UPS, using the power-down procedures of paragraph 6.4.1. Then, push the lower (“0”) front panel button to turn off the UPS. Replace the UPS to have it serviced, and install new UPS per paragraph 6.5.10. Power up new UPS and plug in SCT/MCT, etc. to UPS, and power up those units.
10. Before removing UPS from service, verify that no circuit breakers are tripped. A tripped circuit breaker is the most common UPS problem.

### 6.3.3.5 End-to-End Audio Performance Check/AGC System Checkout

#### 6.3.3.5.1 Test Set-up

This performance check requires the following equipment:

- HP TIMS 4934A (or equivalent TTS), two (2) required

- Impedance Matching Test Adapter (IMTA), DENRO P/N 110311-001, or equivalent
- Test Cables (see **Table 1-2**); for Demarc to TTS #2, use special cable 66 Block to PJ 0501, or equivalent

Refer to following test setup diagram for both performance checks (Transmit and Receive Paths).

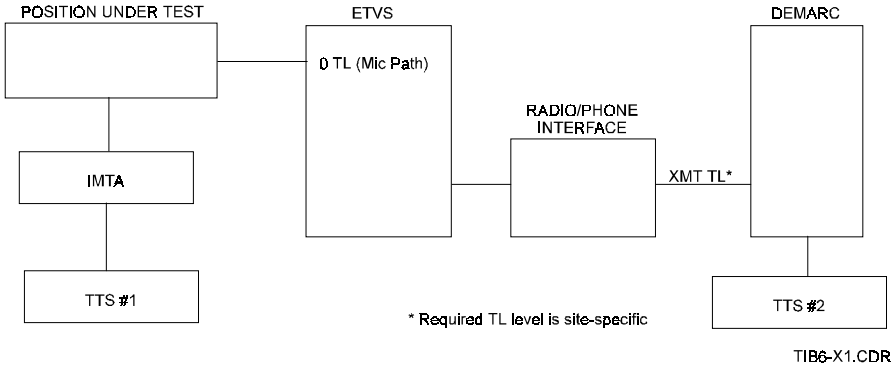


6.3.3.5.2 Performance Check

A. Transmit Path

1. Isolate external interface (Radio or Phone) connections at the demarcation.
2. Connect IMTA to the position's primary instructor (or primary trainee) jack. Remove any headsets/handsets connected to the position undergoing this check.
3. Disable position's AGC as follows:
   a) Enter diagnostics mode by dialing #0000.
   b) Wait for automatic loop back test to be completed.
   c) Enter code (57) to obtain status report, which reads current AGC setting (threshold value) and outputs to the IA display. Record value.
   d) Enter code (53) to disable AGC.
4. Connect TTS #1's transmit audio to the IMTA. Set the TTS output for 600 ohms termination at -10 dBm0, 1004 Hz.
5. Connect TTS #2's receive audio to the interface card's (Radio or Phone) demarcation point.
6. At the position under test, select the interface under test, as follows:

NOTE

AGC on radio interface card should also be off. If not, place jumper W15 in DISABLED (1-2) position.

a) ***For a Radio Interface***. At the position, select the XMT key for the frequency under test. At the IMTA, turn the PTT switch to the on position. The tone should be present at the demarcation point.

b) ***For a Phone Interface***. At the position, select the Phone Interface using either a DA key or the IA key, followed by entry of the appropriate IA code. If a dial tone is present, press any digit key on the keypad at the position.

NOTE

It will be necessary to use the headset/handset removed earlier to check for dial tone. Be sure to remove headset/handset after verifying dial tone presence.

7. TTS #2 should read 1004 Hz, -10 dBm (±3 dB) plus (+) the XMT TL of the interface under test. If not, go to the performance check for the interface under test. If interface under test passes the performance check, **replacement of the card file or IBOP is necessary**.

   **For example**: If the interface used was a Radio adjusted to a XMT TL of -3, the TTS should read a -13 dBm (-10 dBm + [-3 TL]).

8. Enable position's AGC by: dialing #0000, waiting for loop back tests to be completed, and then entering two-digit code (55) to set AGC to normal threshold (-18 dBm).

9. Adjust the TTS#1 send level to –15 dBm. The output level should be –10 dBm (± 3 dBm) plus (+) the XMT TL of the interface under test. If not, go to the performance check for the interface under test. If interface under test passes the performance check, **replacement of the card file or IBOP is necessary.**

10. Perform either step a) or step b), as follows:

    a) If the level obtained in step 9 is not within specification, enter code (57) after diagnostics.

    b) If the threshold reads "level 2", go to the performance check for the interface under test; if interface under test passes the performance check, replacement of the card file or IBOP is necessary. If the threshold does not read "level 2", enter code (55) and repeat step 9.

11. Adjust the TTS send level to –24 dBm. The measured level should be -24 dBm (± 3 dB ) plus (+)the XMT TL of the interface under test. If not, go to the performance check for the interface under test. If interface under test passes the performance check, **replacement of the card file or IBOP is necessary.**
12. If the level obtained in step 11 is not within specification, go to the performance check for the interface under test; if interface under test passes the performance check, **replace card file or IBOP.**
13. Restore the AGC to its original setting.
14. Release the call and disconnect all test equipment.

B. Receive Path

**<u>With AGC Disabled (Radios and Telephone Circuits)</u>**

NOTE

The following procedure is designed for all radios and telephone circuits without AGC enabled. For phone circuits with AGC enabled, disable (turn off) AGC on the conferencer and then perform the checkout.

1. Isolate external interface (Radio or Phone) connections at the demarcation point..
2. Connect IMTA to the position's primary instructor (or primary trainee) jack. Remove any headsets/handsets connected to the position undergoing this check.
3. Connect TTS #1's receive audio to the IMTA. Set the TTS output for 600 ohms termination.
4. Connect TTS #2's transmit audio to the interface card's (Radio or Phone) demarcation point. Set the TTS output for 600 ohms termination at 1004 Hz, -24 dBm plus (+) the RCV TL of the interface card. For example: If the RCV TL of a phone interface is -16 TL, then adjust TTS #2's output for a -40 dBm (-24 dBm plus -16 TL).
5. At the position under test, select the interface under test, as follows:
   a) **For a Radio interface.** At the position, select the RCV key for the frequency under test. The tone should be present at the demarcation.
   b) **For a Phone interface.** At the position, select the Phone interface using either a DA key or the IA key, followed by entry of the

appropriate IA code. If a dial tone is present, press any digit key on the keypad at the position.

NOTE

It will be necessary to use the headset/handset removed earlier to check for dial tone. Be sure to remove headset/handset after verifying dial tone presence.

6. Turn position Headset volume control to maximum, by turning fully clockwise either the Instructor or Trainee volume control, depending on to which jack the IMTA is connected.
7. TTS #1 should read 1004 Hz, and a level greater than or equal to -26 dBm (e.g. a -25 dBm is greater than -24 dBm). If not, go to the performance check for the interface under test. If interface under test passes the performance check, **replacement of the card file or IBOP is necessary**.
8. Turn position Headset volume control to minimum, by turning fully counterclockwise either the Instructor or Trainee volume control, depending on to which jack the IMTA is connected.
9. Set TTS #2 output to -10 dBm plus (+) the RCV TL of the interface card.
10. TTS #1 should read 1004 Hz, and a level less than or equal to -39 dBm (e.g. a -40 dBm is less than -39 dBm). If not, go to the performance check for the interface under test. If interface under test passes the performance check, **replacement of the cardfile or IBOP is necessary.**
11. If required, restore AGC

**With AGC Enabled (Only Telephone Circuits Configured to Have AGC)**

NOTE

The following procedure applies only to telephone circuits which have been configured to have AGC enabled..

1. Ensure AGC is set to ON for channel under test. (On telephone conferencer for telephone circuit under test, ensure that appropriate AGC daughter board channel DIP switch has been set to ON (closed) position to enable AGC for that channel).

2. Isolate external interface (Phone) connections at the demarcation point.

3. Connect IMTA to the position ‘s primary instructor (or primary trainee) jack. Remove any headsets/handsets connected to the position undergoing this check.

4. Connect TTS #1’s receive audio to the IMTA. Set the TTS output for 600 ohms termination.

5. Connect TTS #2’s transmit audio to the interface card’s Phone demarcation point. Set the TTS output for 600 ohms termination at 1004 Hz, -24 dBm plus (+) the RCV TL of the interface card.

   For example: If the RCV TL of a phone interface is –16 TL, then adjust TTL #2’s output for a –40 dBm (-24 dBm plus –16 TL).

6. At the position, select the Phone interface under test, as follows

NOTE

It will be necessary to use the headset/handset removed earlier to check for dial tone. Be sure to remove headset/handset after verifying dial tone presence.

   a) Select interface using either a DA key or the IA key, followed by entry of appropriate IA code.

   b) If a dial tone is present, press any digit key on the keypad.

7. Adjust headset volume level to obtain a –40 dBm readout on TTS display.

8. Change level on TTS #2 to –15 dBm plus (+) the RCV TL of the interface card.

9. TTS #1 should read 1004 Hz at a level of –26 dBm (±3 dB). If it does not, verify that AGC is enabled on the active conferencer for this phone channel. If AGC on phone channel is verified, and test still fails, replace the conferencer card.

10. Disconnect all test equipment.

### 6.3.3.6 Legal Record Performance Check

#### 6.3.3.6.1 Test Set-up

This performance check requires the following equipment:

- HP TIMS 4934A (or equivalent TTS), two (2) required
- Impedance Matching Test Adapter (IMTA), DENRO P/N 110311-001, or equivalent
- Test Cables (see **Table 1-2**; for Demarc to TTS #2, use special cable 66 Block to PJ 0501

Refer to this simplified diagram of test setup for Transmit Path performance check.

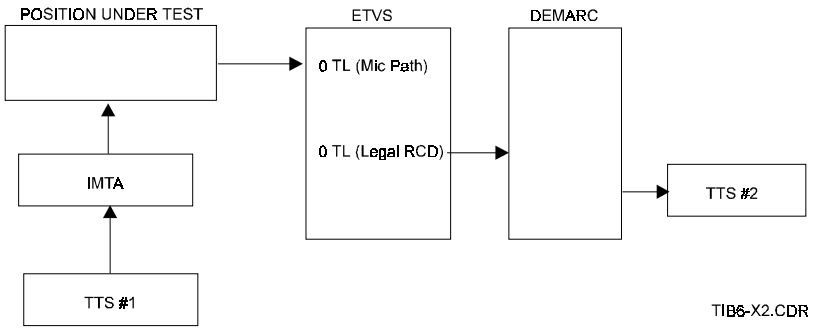


#### 6.3.3.6.2 Performance Check

A. Transmit Path

1. Disconnect Recorder device from demarcation.
2. Connect IMTA to the position's primary instructor (or primary trainee) jack. Remove any headsets/handsets connected to the position undergoing this check.
3. Connect TTS #1's transmit audio to the IMTA. Set the TTS output for 600 ohms termination at -10 dBm0, 1004 Hz.
4. Connect TTS #2's receive audio to the Legal Record demarcation point for the position under test.
5. At the position under test, select the IA key. Press any digit key to remove the dial tone. Turn both sidetone volume knobs to minimum (i.e., fully counterclockwise).
6. TTS #2 should read -10 dBm (±3 dB), 1004 Hz. **If not, replacement of the Card file or IBOP is necessary.**

B. Receive Path

Refer to simplified test setup diagram below in performing this Receive Path performance check.

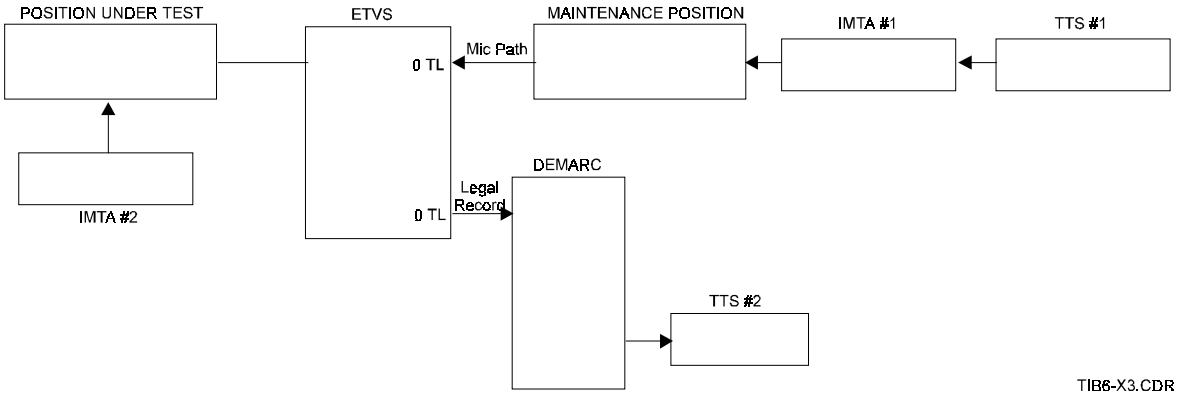


1. Disconnect Recorder device from demarcation.
2. Connect IMTA #1 to the Maintenance position's primary instructor (or primary trainee) jack. Remove any headsets/handsets connected to the Maintenance position.
3. Connect IMTA #2 to the position's (the position under test) primary instructor (or primary trainee) jack. Remove any headsets/handsets connected to the position undergoing this check.
4. Connect TTS #1's transmit audio to IMTA #1. Set the TTS output for 600 ohms termination at -24 dBm, 1004 Hz.
5. Connect TTS #2's receive audio to the Legal Record demarcation point for the position under test.
6. At the Maintenance position, place an IC call to the position under test.
7. At the position under test, answer incoming IC call. Turn both sidetone volume knobs to minimum (i.e., fully counterclockwise). Turn Headset volume control to maximum, by turning fully clockwise either the Instructor or Trainee volume control, depending on to which jack IMTA #2 is connected.
8. TTS #2 should read 1004 Hz, and a level greater than or equal to -10 dBm (e.g., a -9 dBm is greater than -10 dBm). If not, **replacement of the Card file or IBOP is necessary**.
9. At the position under test, turn Headset volume control to minimum, by turning, fully counterclockwise, either the Instructor or Trainee volume control, depending on to which jack IMTA #2 is connected.
10. Set TTS #1 output to -10 dBm.

11. TTS #2 should read 1004 Hz, and a level less than or equal to -23 dBm (e.g., a -24 dBm is less than -23 dBm). If not, **replacement of the Card file or IBOP is necessary**

### 6.3.3.7 Post-Installation Position Equipment Power-Up and Initial Testing

Section 2.10 of this manual provides post-installation performance test procedures for the ETVS position equipment. The procedures include post-installation power-up procedural steps, automated loopback tests of the membrane hardkey positions (local and remote) and TED positions (local and remote), and manual lamp and touch tests. These procedures, similar to the position confidence test (paragraph 6.3.3.9), are performed after installation of the system at the site.

### 6.3.3.8 Network Date/Time Changes

For procedures to make network date/time changes, refer to paragraph 2.4.3.7, SCT User Manual . This procedure provides a Set Network Time dialog box that allows the user at the SCT to change the date and time of the network system clock, change the date/time on the Gateway PCs, synchronize time on all Gateways and SCTs with this machine, and change date/time on SCTs.

### 6.3.3.9 Position Confidence Test

The position confidence test (paragraphs 3.3 through 3.3.2.3) causes the position to go off-line and therefore cannot be performed when the position is operational and without the supervisor's permission. Normally, this test is done following off-line maintenance work at the position or whenever the system is returned to operation after a power failure. Although this test can be done at any time, it should be coordinated with ATC by the Supervisor. This test consists of two parts: one addressing Touch Screen positions and the other hardkey positions. These tests confirm proper hardware and ISDN link performance:

- Loopback Tests (Automated, with IA display PASS/FAIL indicators)
- Light Test (cycle background colors) - Hardkey positions only
- Touch Test (Screen)
- "Split Pot" Module (Potentiometer) Test
- A/G Speaker Test
- G/G Speaker Test

For the diagnostic test functions (Position Confidence Test), dial code entries enable maintenance personnel to turn on/turn off the AGC threshold value, or read the current AGC threshold setting.

NOTE

Adjustment of the lower threshold level allows maintenance personnel to compensate for a noisy or quiet ambient room noise environment on a position by position basis and to disable the AGC while certain tests are performed.

The nominal –18 dBm0 threshold for the position interface is adjustable via maintenance action to one step lower than nominal to one step greater than the nominal in 3-dB steps.

The AGC circuitry contains a threshold detection circuit so designed that, when the input signal is below the regulation range, the output will not be amplified.

The user will enter Diagnostics by dialing #0000, wait for the automatic loop back tests to be completed, and then press a two-digit code to select the desired AGC threshold function.

The following diagnostic dial code functions apply to AGC:

| **Code** | **Function** |
|---|---|
| 53: | Turn AGC off |
| 54: | AGC ON and set threshold value #1 (-15 dB) |
| 55: | AGC ON and set threshold value #2 (-18 dB, nominal) |
| 56: | AGC ON and set threshold value #3 (-21dB) |
| 57: | Status report – reads current threshold value and outputs to the IA display |

### 6.3.3.10 Central Rack Performance Checks (SCT/MCT Diagnostics)

The central rack maintenance diagnostics procedures in Section 6.7 are essentially performance checks that provide one means for checking the operational status of operator positions. As required, these checks are performed remotely from the central rack maintenance position (refer to paragraph 6.4.6, **Figure 6-48**) under the control of a technician at the MCT (with assistance as needed from the Supervisor at the SCT). Two types of tests can be run using this setup: Monitoring and Loopback. The Monitoring test allows the maintenance position to monitor audio from the “tested

position;" the Loopback test allows the maintenance position to send a tone from the maintenance position through selected paths of the "tested position:" and back to the maintenance position, testing the audio path and circuitry. The devices being monitored or looped must be in the "Maintenance Busy" mode. A device placed in the Maintenance Busy mode can be tested and/or reconfigured by maintenance personnel without affecting the other on-line devices. Only the Supervisor at the SCT can place a position/device to be tested in the Maintenance mode. However, maintenance personnel at the MCT can take a device (position) from Maintenance Busy to on-line (normal operating mode), but not vice versa. See definition of "Maintenance Busy" in Glossary, Appendix B.

## 6.4 TROUBLESHOOTING

The system is designed such that a fault in one area will not affect the remaining system operations. Troubleshooting and corrective maintenance must not interfere with or affect the operational portion of the system. With the exception of fuses, troubleshooting is limited to the isolation of a fault to an LRU.

Troubleshooting and fault detection methods and devices used in the ETVS include:

- System Alarms (including Alarm Unit and System Alarm Panel)
- SCT/MCT (including System Status Display, Status Menu, and Diagnostics)
- Status Indicators (Central Rack and Position Equipment)
- Module/Card Substitution
- Error Messages (at SCT/MCT) and MCT printer hard-copy printouts of error messages
- Maintenance Position (Loopback Tests)

Refer to the following subsections for recommendations and procedures.

### 6.4.1 Maintenance Power-Down/Power-Up Procedures

#### 6.4.1.1 Power-Down

It is not necessary to power down the system to troubleshoot the individual telephone, intercom, or radio circuits. However, in the case of a defective LVD unit, remote battery removal/replacement, etc., it may become necessary to power down part or all of the system. Power-down of the system should only be done with prior approval of the facility manager. Should it become necessary to power down the system, use the following procedure:

1. Log out of all MCTs and SCTs (Local and Remote):
   a) Select “Network” (pull-down menu)
   b) Select “Log Out”
   c) Select “File”
   d) Select “Exit”
   e) “WARNING” box appears:

      “SCU logout and close has been requested, do you wish to continue?”

   f) Select “Yes”
   g) Select “Exit Windows”

NOTE

Reference should be made to the *Window’s Users Guide*.

   h) At Program Manager menu (Windows 3.11):
      - Select “File”
      - Select “Exit”
      - Select “OK” to exit Windows 3.11
   i) To end Windows 95 (RCT):
      - Select “Start”
      - Select “Shut Down”
      - Make sure the “Shut down computer?” button is selected
      - Select “Yes” to exit Windows 95

NOTE

Perform step 2 before turning off UPS and shutting off main AC power to the system.

2. Power down all MCTs/SCTs, then all remote SCTs/MCTs (RCTs)

NOTE

Remote servers are connected to remote SCTs/MCTs (RCTs) via a modem interface and plug into a UPS.

3. Turn off each associated UPS by pressing the “off” button located directly below the I TEST (on/test) button on the UPS front panel.

NOTE

Each local SCT and MCT and each local and remote CPU and remote server is connected to its own UPS. Each printer is connected to the same UPS as the MCT with which it is associated.

4. Power down the system:
   a) Shut down AC breakers on the front of the central rack power supplies.
   b) Remove fuse (F1) (labeled Fuse 1 AMP) from the battery connect LVD front panel (formal name: Assembly, Battery Low Voltage Disconnect, System Alarm Panel Interface).
   c) Reinsert fuse (F1) on LVD front panel.
   d) If necessary, repeat steps a through c for powering down the remote rack.

#### 6.4.1.2 Power-Up

The following is a step-by-step procedure for system start-up. With exception of steps 1 through 4 which must be done in sequence for each power-up, many of the steps thereafter (5 through 17) may not be required. Steps 5 through 16 are corrective actions to be taken in the case of partial or catastrophic system failures due to power-up. Under most scenarios, step 16 will be sufficient to restore total system functionality. For more severe system failures (e.g., system-wide lost or static audio) perform steps 5 through 16 sequentially to restore total system functionality. Step 17 is not a corrective action but may be required depending on the state of the position (attended vs. unattended) during power-up.

1. Ensure that gateway interface computers have their power switches set to ON.
2. Turn on AC breakers on front panels of the power supply modules at:
   - Central Rack
   - Remote Power Rack

NOTE

UPS units are provided for each local SCU and MCT and each remote SCT and server. Each printer is connected to the same UPS as the SCT/MCT with which it is a associated.

3. Turn on each UPS by pressing its power on (TEST) button.
4. Turn on SCTs/MCTs at:
   - Local stations
   - Remote (RCT) stations (including remove server CPUs)

NOTE

The RECON ENABLE (RCN ENBL) may become active (i.e., LED FLASHING) at a position upon power-up if:

- The computed checksum for the configuration map stored in the EEPROM does not match the checksum stored in EPROM
- The Operator Processor board detects an invalid map in the EEPROM
- The position accepted a map (RECON ENABLE button pressed or position is unattended) and system shut-down occurred less than 15 minutes afterward (the Operator Processor board requires approximately 12 minutes to store map data into the EEPROM; if shut-down occurs before all data is stored, the checksum will be incorrect and/or the map invalid)
- The checksum computed by the Operator Processor board matches the checksum stored on the gateway computer; however, when the Operator Processor board polls the gateway computer for “Latest Map Concurrence”, the timestamp from the gateway computer does not match the timestamp stored in the Operator Processor board’s EEPROM

5. Reset slot 16 TMU by loosening the thumbscrew located on the front panel until the run LED goes out and the red clock fault and amber diagnostic LEDs turn on. Retighten thumbscrew.
6. Reset slot 17 TMU by loosening the thumbscrew located on the front panel until the run LED goes out and the red clock fault and amber diagnostic LEDs turn on. Retighten thumbscrew.

7. Reset Parallel Control Processor by momentarily pressing the red button located on the front panel labeled “RESET”.
8. Reset Alarm Card by momentarily pressing the red button located on the front panel labeled “RESET” (not the button labeled “ALARM RESET”).
9. Reset Gateway Interface Cards by momentarily pressing the red button located on the front panel labeled “RESET”.
10. Wait until at least one of the TMUs is operational (the run LED is on and the clock fault and diagnostic LEDs are off).
11. Reset/reenable ALL slot 16 CMUs by loosening the thumbscrew located on the front panel until the LED goes out and the red clock fault and amber diagnostic LEDs turn on. Retighten thumbscrew.
12. Reset/reenable ALL slot 17 CMUs by loosening the thumbscrew located on the front panel until the LED goes out and the red clock fault and amber diagnostic LEDs turn on. Retighten thumbscrew.
13. Reset ALL conferencer pairs by pressing the red reset button located on the front panel. (Reset each conferencer pair simultaneously.)
14. Reset ALL position operator processor cards by pressing the red reset button located on the front panel.
15. Reset ALL supervisory recorder interface cards (operator processor cards used to interface to the supervisory recorders) by pressing the red reset button located on the front panel.
16. Check SCT/MCT device status for reported failures. Reset any device that does not come up within 1 minute except for remote position operator cards. The remote position operator cards may take nearly 3 minutes to come up. Any telephone interface cards that do not come up can be reset by removing and reinserting them.
17. If the special function key RECON ENABLE (labeled RCN ENBL) at either the BOP or TED position is still FLASHING after system power-up and reset procedure is complete, press the RCN ENBL button to extinguish the FLASHING LED.

### 6.4.2 System Alarms

There are two central failure alarms: the alarm unit (CCA) [see paragraph 6.4.2.2, which addresses this unit and the System Alarm Panel (SAP) in the Central Equipment Rack]. Equipment failures will trigger an alarm on the SCT/MCT. This alarm can be used to locate and identify the failures. The cause of the alarm can also be identified using the front panel indicators. Items that do not report “down” status or trigger

alarms include: RPIUs, SCTs/MCTs, jackboxes, transient surge protectors, ring generator CCA, and individual reserve power batteries. In addition, loss of audio gives no indication on SCT/MCT or at Alarm Unit (i.e., analog/audio circuits are not monitored, as stated in paragraph 6.4.3). Further, a single audio fault in a radio module causes loss of main/standby capability. The ring generator, however, does send an alarm (via the alarm unit) for the following: a blown 24 VDC fuse; low or no ring voltage; and low or no bussed -48 volts.

NOTE

The foregoing faults trigger an audible alarm; however, no reports (or status) are available to the SCT/MCT.

#### 6.4.2.1 Position Fuse Panel

The fuse panel will trigger an audible alarm when a position fuse opens.

NOTE

A label strip above the fuses in the Position Fuse Panel identifies the position served by each fuse. This fuse ID marking varies from one ETVS system/system configuration to another. The Position Fuse Panel has a 16-line (position) capacity. If a fuse blows, the LED indicator adjacent to and to the right of the blown fuse extinguishes and an audible alarm sounds at the Alarm Unit. The quantity of Position Fuse Panels used in the system depends on the system and the number of operator positions.

1. Mute the alarm using the ALARM RESET switch on the alarm card.
2. Locate the blown fuse by noting which fuse indicator lamp is not lit.
3. Replace the fuse (or take whatever other corrective action is necessary).

NOTE

The alarm unit does not provide an audible alarm when a blown fuse condition already exists (i.e., if, while a position is defused, a fuse blows elsewhere in the system, no audible alarm will sound).

4. If the Fuse Panel does not provide an alarm when a fuse blows, replace either the fuse alarm unit (card), the SAP, or both (if necessary). For SAP replacement procedures, see paragraph 6.5.7; for alarm unit replacement, see paragraph 6.5.3.

#### 6.4.2.2 Alarm Unit (Central Rack CCA)

ETVS provides for the reporting of LRU failures to the SCT. The Alarm Unit (Alarm Processor) card reports a failure to the SCT which will then provide a trigger (system fault alarm) to the SAP when any LRU being monitored by the card fails. If the fuse blows in the system, an audible alarm is generated on the Alarm Unit card.

When the alarm sounds, the alarm is muted (silenced) by pressing the ALARM RESET switch.

The Alarm Unit card monitors the LAN and unique input ports to report alarms. The processor monitors the following alarms and provides the indicated function:

- System Processor Polling—retain status, relay to SCT upon request

The following guidelines for the Alarm Unit are provided to assist in correcting the fault:

a) The FUSE indicator will light if the internal fuse has blown.

b) The RMT ALM indicator will light for a failure in the power system. If the alarm is caused by:

   - A blown fuse in one of the central rack cards, the Blown Fuse indicator for the affected card (CCA) will be lit. See troubleshooting procedures for the affected card (CCA). Replace CCA if found to be defective.
   - A blown fuse on one of the position fuse panels, the LED display will be extinguished when the blown fuse occurs. Check equipment served by the fuse (identified by the label strip above it). Replace position equipment as necessary.
   - A blown fuse on the redundant load connect LVD unit; “LOAD CONNECTED” LED off (not lit).

c) A/B Bus:

   - If the local bus is locked up, one of the IN USE A or B indicators will be lit; replace the alarm card.

- Alarm Unit front panel A B 1-10 indicators represent an integration/troubleshooting tool for DENRO personnel and, as such, are used mainly for system development purposes. Normally, these indicators would not be used as a fault indicator in LRU fault isolation procedures.
- Cabling connection/wiring/wiring connection problem.

d) Remote Alarm:

- The remote power rack SAP reports alarms to its local SCT via a relay actuator card installed in one of the ISA card slots in a selected SCT. (This card is pre-installed at the manufacturer's facility.) This card performs the same function in the alarm system that the parallel control processor CCA performs in the central rack with respect to the alarm system functions.

#### 6.4.2.3 System Alarm Panel (SAP)

The SAP provides a centralized location (in the Central Equipment Rack) for all system alarm indications, both visual and audible. Contained in the remote power rack is a system alarm panel of the same type that, in addition to its other functions, monitors the remote rack power supplies.

Both panels contain an ALARM RESET/TEST pushbutton. The TEST pushbutton position, when activated, provides an indication (i.e., illuminates RED when an alarm occurs) that the alarm system is operative (i.e., this button may be used periodically to test—sound—the audible alarm; if the alarm fails to sound, the alarm circuitry may have a fault causing the audible alarm failure and must be checked out). When pressed and released, the ALARM RESET pushbutton/indicator mutes the audible alarm, but remains illuminated until the alarm condition(s) is (are) corrected. The audible alarm is triggered if a second fault occurs, even if the fault is muted. Possible causes of alarm circuitry failure include:

a) Intermittent or temporary loss of Main (AC) system power

b) Defective TEST switch

c) Defective cabling (e.g., cut/damaged insulation, electrical short, broken conductor wires, damaged connectors, damaged or broken connector pins, loose connections, etc.)

d) Blown fuse(s)

NOTE

This may be a source of confusion since alarm unit will sound an alarm the instant a fuse is blown. The SAP, in most cases, will report a fault as a result of the unit (which has a blown fuse) missing a poll.

e) Failure or fault in the central rack overheat alarm loop that would normally supply a ground-state alarm signal to the SAP

f) In addition to the ALARM RESET/TEST switch/indicator, a failure or fault in one or more of the following fault-detection alarm circuits on the system alarm panel:

- System Fault Alarm—SYSTEM FAULT indicator lights RED
- Reserve Power Alarm—RESERVE POWER indicator lights RED
- Low Power Alarm—LOW POWER indicator lights RED
- Main Power Alarm—MAIN POWER indicator lights RED
- Power Supply Fail Alarm

NOTE

Although there is no indicator light on the SAP for a power supply module failure alarm, a message noting a power supply failure appears on the SCT/MCT status window; see paragraph 6.4.4.2.2, item 27.

- Overheat Alarm—OVERHEAT indicator lights RED

NOTE

Each central rack assembly (and full height remote power rack) has an overheat lamp at top of front of cabinet that is turned on when internal heat of cabinet exceeds the threshold ($70^{o}$ C) set for the thermostat switch sensor.

g) Failure or fault of the on-board (alarm panel) logic to produce an audible alarm

CAUTION

Removal of fuse, unplugging power, etc., will result in equipment going off-line. Supervisor must coordinate this maintenance activity with ATC before proceeding.

- Relay Actuator Card (in remote SCT ISA card slot)

If the problem is isolated to the SAP at either the central rack or remote power rack locations, replace the unit following the procedure in paragraph 6.5.7. An audible alarm may or may not sound at the SAP when a power supply module fails. The number of Power Supply modules installed (e.g., 3) does not equal the number required to sustain the system load (e.g., 2). The SAP will not report any Power Supply failures unless the number of working Power Supply modules equals the configurable threshold number set at the SCT.

CAUTION

When a fuse blows or a power supply module fails, and a system component goes off-line, ATC must be notified immediately. This also applies any time a fuse is pulled, to ensure operations are not interrupted.

#### 6.4.2.4 Remote Alarm Units

The ETVS has smaller, desktop alarm indication units, in several locations (including remote locations) that contain LEDs that duplicate the alarm indications of the SAPs. They also have a RESET/TEST switch and an alarm enunciator, but contain no other circuitry.

#### 6.4.2.5 System Alarms

The alarm system reports the following alarms:

1. **Alarm Unit—**reports the following to the SCT/MCT:
   a) Position power fuse blown
   b) Card cage circuit card fuse blown
   c) Control data bus (A & B) failure

   The SCT and MCT display the above alarms and enter the alarms in the maintenance log. They also generate a SYSTEM FAULT alarm to the System Alarm Panel (Central Rack and Remote Power Rack locations) and the smaller Remote Alarm Units. This includes a red SYSTEM FAULT indication on the System Alarm Panel when a Central Rack power supply module fails.

2. **System Alarm Panel—**receives the following information and forwards it to the SCT and MCT via the Parallel Control Processor CCA:

a) From the Low Voltage Disconnect Panels:

- Low power
- Reserve power

b) From the central rack:

- Overheat (from rack heat sensors)
- Power supply operating status

c) From the facility doors (up to 5):

- Door open

3. **System Alarm Panel—**receives the following status changes via the Parallel Control Processor:

a) From the SCT via the Parallel Control Processor CCA:

- System fault
- Main Power

b) From the positions via the Parallel Control Processor CCA:

- Door release

#### 6.4.2.6 Checking Various Components of the System Reporting Network

Quick checks of the alarm circuitry include the removal or disconnection of a system component (e.g., fuse removal, putting a card in the wrong slot, unplugging the power supply module(s), etc.) to force an error message/alarm. If such action fails to activate an alarm and fails to result in an error message, a fault in the alarm circuitry is indicated. Replace each component of the system alarm reporting network, in turn, until the fault is corrected. The following units contribute to the system reporting network:

- Central rack Alarm Unit (CCA)
- Central rack Parallel Control Processor (CCA)
- Central rack SAP
- Remote power rack SAP
- Central rack Low Voltage Load Disconnect Panels
- Central rack and remote power rack Low Voltage Battery Disconnect Panels
- Central rack and remote power rack power supplies
- Central rack heat sensors in each rack
- Full height remote power rack heat sensor
- Remote Alarm Units
- UPS/SCT/MCT/remote server alarm interface

### 6.4.3 Substitution of Modules/Cards

A set of spare modules (central rack cards, position switch cards/modules) should be maintained at the site. When a possibly defective card/module is detected, an operational spare should be substituted to determine whether the card/module was, in fact, defective.

The built-in fault-detection circuits relate only to the digital circuitry. For digital circuits, module/card substitution is not required (only replacement). The analog circuits, however, are not monitored. Therefore, if a fault exists in one of the communications channels and is not detected by the SCT/MCT, substitute, one at a time, known operational spares for the associated interface cards. As each card/module is substituted, check the results. Return the original card/module if the fault is not corrected. Continue until the fault is corrected.

The significance of the term “kit,” as applied to CCAs (EPROMs), must be taken into account when substituting cards having firmware installed. The replacement card must be checked to ensure that the correct firmware has been installed (see Section 1, **Table 1-3** for listing of firmware) and matches that of the card it is replacing. This also applies to cards with jumpers. The jumper strapping configuration must be identical to that on the card being removed. (See Appendix A for card jumper/ strapping physical locations, and Section 5 for recommended jumper/strapping settings.)

### 6.4.4 SCT/MCT Maintenance-Related Functions

Common maintenance functions shared by the SCT/MCT are as follows:

- Display the current system status on their video monitors.
- The SCT/MCT continuously check for “local” system faults. If a unit fails, an alarm sounds to signal the user, and the Device Status screen appears, displaying current status. The user can either move to the Maintenance Log screen or retrieve the printout from the maintenance printer (associated with the MCT) for additional information.
- The RCT continuously checks for faults and stores status information for the remote site.

The MCT allows maintenance personnel to perform monitoring and loopback tests to devices placed in the “Maintenance Busy” mode and to configure devices in the Central Rack. The MCT also provides the capability to run confidence/diagnostic tests on the operator positions (see paragraph 6.7).

NOTE

When “Maintenance Busy” loopback is enabled, do not expect to use the affected position. There is no indication of “Maintenance Busy” at this position and proper coordination between ATC and supervisory personnel must take place.

When not being used to reconfigure the maintenance position, the MCT should always be in the System Status Display menu. As such, it monitors the status of the system, displaying non-operational units and identifying any units (positions, devices) that are down.

The MCT sends status and error messages to the maintenance printer for printout in hard copy form. Selecting the MaintPrint box on the Maintenance Log causes these messages to be automatically sent to the printer and printed out as they occur. Printing of error/status messages will continue automatically unless this capability is de-selected by the user. The MaintPrint box may be de-selected (by clicking on the checkbox to remove the ‘x’) to disable automatic printing.

NOTE

- Printout of error and status messages is a maintenance function; in order for the printer to print messages, a maintenance level login password must be active at the MCT.

- The level “MAINT” password should not be used in the case of the RCT (the functions of which are similar to those of the SCT), since the RCT operator cannot hear audio signals (at the site) needed for maintenance trouble-shooting/fault isolation.

The NISR monitors the network connection status of both gateway PCs; however, it does not pop up any message or start beeping. The SCT gets network connection status from the NISR and reports any problem to the user by popping up a message box and initiating an alarm. The SCT also sends the status to the gateway that puts the information in the maintenance log. Upon reading the maintenance log, the SCT recognizes the network connection status information and displays it into readable form.

#### 6.4.4.1 System Status Faults

When a fault is detected, a slow, beeping alarm will sound. At the local SCT/MCT workstation, the device status menu provides status (e.g., off-line indication; sometimes a message appears on both the status menu and the status bar; at other times, a message will appear only at one or the other). The status menu identifies failed central equipment rack cards/position equipment. The status bar is at the bottom of the screen. The following faults are reported:

a) **Device in slot is of wrong type**. This error is reported by the Configuration Control Subsystem (i.e., Gateway Computers). To correct this error, reinstall the device in the reported slot number into a slot that has been configured for a device of this type or correct current configuration via the SCT. See **Table 6-21**, which lists and identifies error/status message display methods for the system.

b) **Redundant parallel bus error detected and reported to the MCT/SCT.** This error is reported by any device processor that detects an error with the operation of the parallel bus, and error message generated at SCT/MCT. Message may read: "Parallel Bus Error XXXXXXX 81 bus errors in 15 seconds;" or "Device XXXXXXX (cage XX, slot XX) is reporting bus errors."

c) **Fuse alarm detected**. One of the hardware fuse alarms has been detected by the alarm unit/alarm processor. The alarm unit monitors the state of the fuse alarm lines from each unit in the central rack card cages and from the position fuse panels. If a fuse blows in one of the card cage CCAs or position fuse panels, the alarm unit fuse status line to status register 2 indicates a fuse alarm. The alarm unit notifies the SCT/MCT that a fuse alarm has occurred and generates a SYSTEM FAULT alarm that is sent to the SAP. If replacement of the mounted hardware with a unit known to be operational does not correct the fault, the system must be checked by Second Level Support personnel to determine the cause and correct the fault.

d) **Device in slot is not operational**. This error is reported by the alarm unit/ alarm processor when it detects a device error while polling all system devices. To correct, replace device processor circuit card in reported slot number.

### 6.4.4.2 Error and Status Messages

Hard copies of error and status messages are provided by the printer, and SCT/MCT error messages are displayed in the message box (window popup). The following error message subsection has been provided. It contains the listed error messages and their meanings. **Table 6-21** presents a summary of error message presentations and where they may be found. Error messages can be displayed several ways, as defined in the table: Status Bar, Maintenance Log (Status Menu), Device Status (Status Menu or Status Window), MCT printer, and message box popup.

NOTE

The SCT error messages presented in paragraph 6.4.4.2.1 are related to normal operation of the system only. Messages related to software development and debugging, and, hence, having little or no chance of occurring, are not listed/defined herein. The items are valid error and status messages and can occur and, if required, be printed out in hard copy form.

**Figure 6-10** shows the location of the indicator icons and status bar on the SCT/MCT Main Selection Menu. The indicator icons represent symbols of selected items; the status bar is shown located on the lower edge of the screen. To use this feature, the operator moves the mouse cursor to the desired indicator icon to get the current status of the device displayed on the screen.

***Table 6-21. Error Messages***

| DISPLAY METHOD | DESCRIPTION |
|---|---|
| Message Box (Window Popup) (SCT/MCT) | The Popup Window message box is displayed on the monitor screen. The message contained within this box generally indicates failures that the SCT/MCT is experiencing while accessing the database. Part of the error message (portions in parentheses in error message listings) are shown in the title bar at the top of the window. The remainder of the message is shown within the main part of the box. Many, but not all, of the error messages displayed in these popup windows are associated strictly with the Operating System software. These popup messages appear on the screen (pop up automatically) whenever a critical fault occurs in system. |
| Status Bar (SCT/MCT) | The Status Bar is located on the lower edge of the screen in the Main Selection Menu. The Status Bar, using indicator icons representing a symbol of the status item, displays the operational status of selected functions/devices in the ETVS system. To operate, the user moves the mouse cursor to the desired indicator icon to get the current device status displayed on screen. Status indications include those for AC and DC power, power supply modules in the central rack, fuses, uninterruptable power supplies, temperature, batteries, and SCT/gateway network connections. |
| Maintenance Log | The Maintenance Log is a dialog box used to select stored system events; it allows the user to view this information on screen, save annotations, or print a copy. New events are added to the top of the list as they occur; only the most recent events are kept. As new events are listed, the oldest events are discarded. The maintenance log allows the user to view a message window for all status conditions throughout the system. The user scrolls through the list to see needed information. The maintenance log also has a feature that enables the user to annotate system events and display these annotations in a NOTE box in the lower portion of the dialog box. |
| Status Menu | The Status Menu dialog box is used to display the operational status (up/down) of devices in the system; it also displays slot number, name, and type. The box also indicates the following conditions: 'in diagnostics (diagnostic)' and 'unmonitored.' In the event of a fault, the device status dialog box will appear on screen displaying current device conditions. The status information is updated continuously. |
| MCT Printer & Alarms | The SCT and MCT continuously check for system faults. Should a unit fail, an alarm sounds to signal the user, and the Device Status screen appears displaying current status. The user then moves to the Maintenance Log screen or retrieves the printout from the maintenance printer for additional information.<br><br>The MCT sends the status and system error messages to the maintenance printer to be printed out in hard copy form as events occur. This information is the same data which is stored in the Maintenance Log screen in the status menu. When set up to do so, at the MCT, the maintenance printer will automatically receive and print status and error messages as they occur. In order for the printer to print, a maintenance level login password must be active at the MCT. |

Both the SCT and MCT continuously check for system faults. Should a unit fail, an alarm sounds to alert the operator or technician. The user then moves to the System Status Display to determine which device has failed.

At the SCT, the F9 key may be pressed to silence an alarm. The alarm is a special message used by the ETVS software/voice switch to notify the SCT and MCT users of some significant event such as a card or a unit failure. However, alarms are not always errors; they can also be used for informational purposes (e.g., power supply module status). The SCT, therefore, can be configured to 'beep' when the alarms are received.

#### 6.4.4.2.1 SCT Error and Status Messages Displayed in Message Box (Window Popup)

NOTE

The following error (and status) messages listed in parentheses are indicated on message box's title bar. The remainder of the message is contained within the main part of the box.

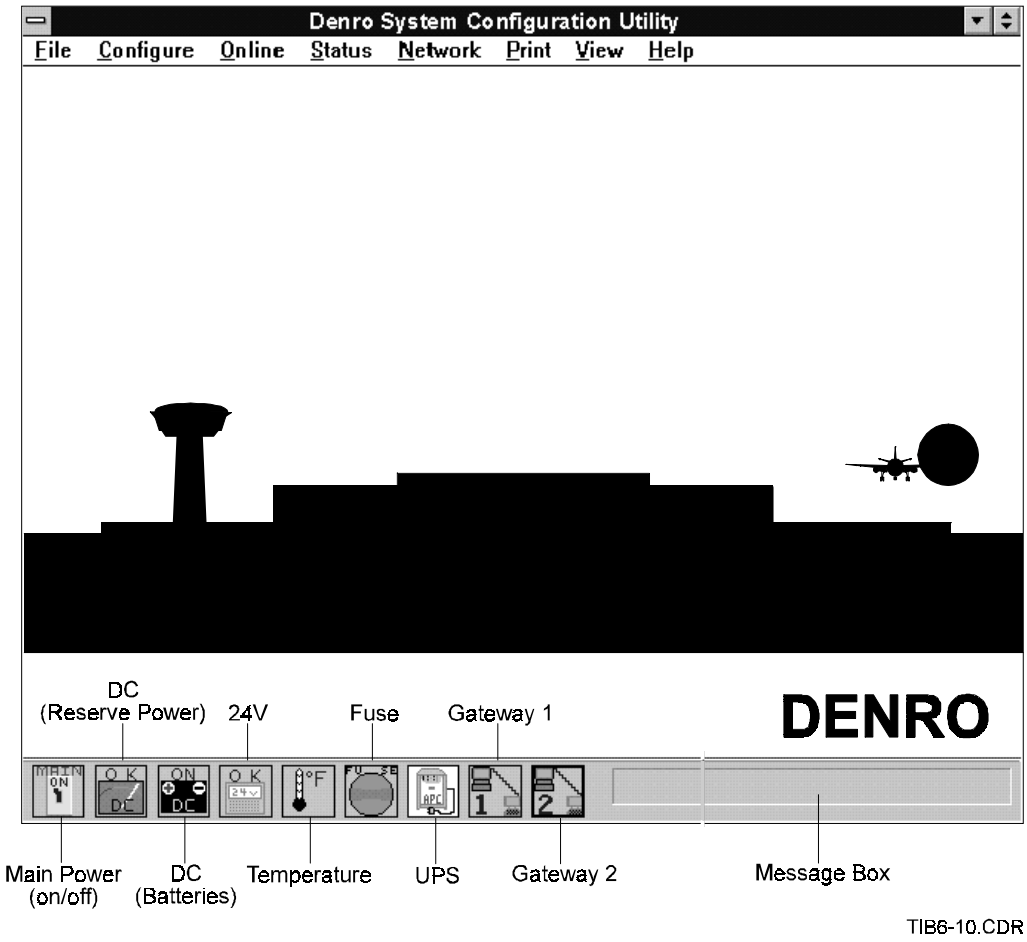


*Figure 6-10. SCT/MCT Indicator Icons and Status Bar*

**LEGEND**

- Functional name for operation, error, software instruction, etc. = xxxxxxxxxx (ten characters)
- Error Code = Err Code ???
- Error Number = # xx/error #
- Slot = ??? (3 characters)
- Device Name = ??????? (7 characters) or ???????? (8 characters)
- Phone Map = ??????? or xxxxxxx (7 characters)
- Radio Map = xxxxxxx (7 characters)
- Invalid Class = xxxxxxx (7 characters)
- Channel = ??? (3 characters)
- File = ?????????? or xxxxxxxxxx (10 characters)
- Local Map = xxxxxx (6 characters)
- Key Table = xxxxxxx (7 characters)
- Map = xxxxxxx (7 characters)
- Assigned Login Home Position = xxxxxxx (7 characters)
- Supervisor = ??????? or xxxxxxx (7 characters)
- Members = ?? (2 characters)
- Power Supply = xx (2 characters)
- File Out Failed = ?? (2 characters)

1. (DATABASE ERROR) Operation failed, [name of operation - 10 characters] The database operation failed. xxxxxxxxxx describes the failed operation.
2. (DATABASE ERROR) Cannot open file, xxxxxxxxxx—Cannot open a file. REASON: file name or path is invalid; or attempting to create a file that already exists; or attempting to lock a file that is locked by another. xxxxxxxxxx describes the file which cannot be opened.
3. (DATABASE ERROR) Cannot create lock file, xxxxxxxxxx—Cannot create a lock file, the lock file name or path is invalid. xxxxxxxxxx describes the file which cannot be created as a lock file.
4. (DATABASE ERROR) Map already exists, xxxxxxxxxx—Specified map name already exists. xxxxxxxxxx describes the Map which already exists.
5. (Cannot backup system files) Cannot access data drive—Cannot access gateway database drive.
6. (No room on A:) SCU Backup—There is not enough room on floppy Drive A: for backup.
7. (Lock is held by SCU xx - zzzzzzz, please try later?) Cannot open file, Open ?????????? file error—The ?????????? file is locked by zzzzzzz on SCT xx.

8. (Failed to Find Any User IDs) You are now required to define a name and a password for a System Administrator before being allowed to continue—The System Security database is empty. No user ID and password record is defined.
9. (Password Error) Unable to run SCU without a proper password, error #??—The password entry is invalid and the error code is ??.
10. (Password Error) You must enter a password, or click 'Cancel'—Prompting user to enter a password or click Cancel button.
11. (Password Deletion Error) You may not delete yourself—Blocking a user deletes his/her own system security record.
12. (Error, ID Duplication) This User ID has already been used—The user ID has been used. A user's ID should be unique.
13. (Error, Unable to Comply) A password must be entered—No password entry.
14. (Error, Unable to Comply) A 'Home Position' must be selected for level 5—A home position must be selected for a level 5 user.
15. (Error, Unable to Comply) A 'Home Position' must be selected for level 4 - Maintenance—A home position must be selected for a level 4 - Diagnostic user.
16. (Error, Unable to Comply) A 'Security Level' must be selected—A user must have a proper user Security Level.
17. (Error, Unable to Comply) A User ID must be entered—The User ID field is empty.
18. (Password Verification Disabled) You may now execute certain reconfiguration functions without being required to re-enter your password—Prompting to disable password verification.
19. (Password Error) Unable to execute this function without a proper password, error #??—The password entry in the password verification window is invalid. The error code is displayed.
20. (Password Error) You must enter a password, or click 'Cancel'—In password verification window, a password must be entered or click the 'Cancel' button.
21. (Error, Unable to Comply) Unable to determine which Conference is currently selected—Unable to determine which conference is currently selected when attempting to add a new member.
22. (Error, Unable to Comply) This conference group already contains the maximum number of members—Attempting to add a new member to a conference which already contains the maximum number of members.
23. (Data Validation Error) A Name must be entered—A Device Name must be entered when configuring a new device.

24. (Data Validation Error) A Type must be entered—A Device Type must be entered when configuring a new device.
25. (Data Validation Error) Device Name is not unique—Each Device must have a unique name in the system.
26. (Error, Unable to Comply) A ‘Name’ must be entered for the selected speed dial from the ‘Current Entries’ box—Attempting to add a new speed dial but the speed dial name field is empty.
27. (Error, Unable to Comply) Name is not unique—The speed dial name should be unique.
28. (Error, Unable to Comply) A ‘Speed Dial’ button must be selected from ‘Current Entries’ box—Attempting to add a new speed dial member to the speed dial list while no speed dial list item is selected.
29. (Error, Unable to Comply) A phone number to be ‘dialed’ must be entered in the ‘Phone Number’ box—Attempting to add a new speed dial member to the speed dial list while the phone number field is empty.
30. (Error, Unable to Comply) A phone must be selected from ‘Current Phone’—Attempting to add a new speed dial member to the speed dial list, but no phone is selected from the available phone list.
31. (WARNING) System reconfiguration is in progress, please try later!—One is reconfiguring the system. The system reconfiguration is currently blocked by that SCT. Only when that SCT has finished system reconfiguration can another SCT reconfigure the system.
32. (Speed Dial - INVALID Chan/Class) Removing Device at Slot ??? due to INVALID data—When attempting to activate a global map, the system checks data in the Speed Dial table and finds an invalid channel number. The system prompts user to remove the invalid channel in the speed dial table and displays the possible slot number for the channel.
33. (Speed Dial - INVALID Chan/Class) Removing Device ??????? due to invalid class in Speed Dial—When attempting to activate a global map, the system checks data in the Speed Dial table and finds an invalid device class (Off-line or Maintenance Busy). The system prompts to remove the invalid device ??????? from Speed Dial table.
34. (IA Table - INVALID Chan/Class) Removing Device at Slot ??? due to INVALID data—When attempting to activate a global map, the system checks data in the IA table and finds an invalid channel number. The system prompts user to remove the invalid channel in the IA table and displays the possible slot number for the channel.

35. (IA Table - INVALID Chan/Class) Removing Device ??????? due to INVALID data in IA table—When attempting to activate a global map, the system checks data in the Speed Dial table and finds an invalid device class (Off-line or Maintenance Busy). The system prompts to remove the invalid device ??????? from IA table.
36. (PRESET Conference - INVALID Chan/Class) Removing Device at slot ??? due to invalid Chan in Preset Conference—When attempting to activate a global map, the system checks data in the Preset Conference and finds an invalid channel number. The system prompts user to remove the invalid channel in the Preset Conference and displays possible slot number for the channel.
37. (PRESET Conference - INVALID Chan/Class) Removing Device ??????? due to Invalid Class in Preset Conference—When attempting to activate a global map, the system checks data in the Preset Conference and finds an invalid device class (Off-line or Maintenance Busy). The system Prompts to remove the invalid device ???????? from Preset Conference.
38. (Trunk Groups Table - INVALID Chan/Class) Removing Device at Slot ??? due to INVALID data—When attempting to activate a global map, the system checks data in the Trunk Group and finds an invalid channel number. The system prompts user to remove the invalid channel in the Trunk Group and displays possible slot number for the channel.
39. (Trunk Groups Table - INVALID Chan/Class) Removing Device ??????? due to Invalid Class—When attempting to activate a global map, the system checks data in the Trunk Groups and finds an invalid device class (Off-line or Maintenance Busy). The system prompts user to remove the invalid device ??????? from Trunk Groups.
40. (Phone Map - INVALID Chan/Class) Removing Device at Slot ??? in Phone Map ??????? due to INVALID data—When attempting to activate a global map, the system checks data in Phone Map ??????? and finds an invalid channel number. The system prompts user to remove the invalid channel in the Phone Map ??????? and displays possible slot number for the channel.
41. (Phone Map - INVALID Chan/Class) Removing Device ??????? in Phone Map xxxxxxx due to Invalid Class—When attempting to activate a global map, the system checks data in Phone Map xxxxxxx and finds an invalid device class (Off-line or Maintenance Busy). The system prompts user to remove the invalid device ??????? in Phone Map xxxxxxx.
42. (Radio Map - INVALID Chan/Class) Removing Device at Slot ??? in Radio Map xxxxxxx due to INVALID data.-- When attempting to activate a global map, the system checks data in Radio Map xxxxxxx and finds an invalid channel number. The system prompts user to remove the invalid channel in the Radio Map xxxxxxx and displays possible slot number for the channel.

43. (Radio Map - INVALID Chan/Class) Removing Device ??????? in Radio Map xxxxxxx due to INVALID data—When attempting to activate a global map, the system checks data in Radio Map xxxxxxx and finds an invalid device class (Off-line or Maintenance Busy). The system prompts user to remove the invalid device ??????? in Radio Map xxxxxxx.
44. (Invalid Class - xxxxxxx) Do you want to remove Device ??????? in xxxxxxx—When attempting to activate a global map, the system checks data in xxxxxxx and finds device ???????? having an invalid class (Off-line or Maintenance Busy).
45. (Invalid Chan - Key Table xxxxxxx) Device at defined Channel = ??? does not exist, continue?—When attempting to activate a local or global map, the system checks data in Local Map xxxxxx and finds slot number is invalid. The possible Channel number is displayed for reference and prompts user to continue or abort.
46. (Invalid Chan - Key Table xxxxxxx) Device at Slot ??? does not exist in Physical Configuration file, continue?—When attempting to activate a local or global map, the system checks data in Local Map xxxxxx and finds channel number is invalid. The possible slot number for the channel is displayed.
47. (Invalid Key - Chan Table) Removing Device at slot ??? in Map xxxxxxx—Key assignment in Map xxxxxxx has an invalid channel number. This message prompts user to remove the number from this channel. The possible slot number ??? is displayed.
48. (Invalid Class - Off-line) Supervisor personnel cannot send map xxxxxx to OFFLINE position—The supervisor personnel cannot send maps to OFFLINE position.
49. (Invalid Class - Maintenance Busy) Supervisor personnel cannot send map xxxxxxx to MAINTBUSY position—Supervisor cannot send a map to Maintenance Busy position.
50. (Invalid Class - On-line) Maintenance personnel cannot send map xxxxxxxx to ONLINE position—Maintenance personnel cannot send map to ONLINE position.
51. (RECORDER ERROR) Unable to ACCESS due to Invalid HOME position: Assigned Login Home position = xxxxxxx—The selected position does not match the user's Home position.
52. (RECORDER ERROR) No RECORDER assigned to supervisory position ???????—Assign RECORDER first!!—The supervisory position does not have a recorder assigned.
53. (RECORDER ERROR) Position xxxxxxx is not a SUPERVISORY Position!! Need to assign as HOME position—The selected position is not a SUPERVISORY position.

54. (ERROR, capacity exceeded) You cannot record this position, already 5 (max) positions are recording, you must delete some before adding more—No record is available. All are used.
55. (SUPERVISOR RECORDING) Already 5 (max) positions are recording—All recorders are used. No record is available.
56. (SUPERVISOR RECORDING) Supervisor xxxxxxx cannot record himself—A Supervisor position cannot record itself.
57. (SUPERVISOR RECORDING) Position xxxxxxx already RECORDED by Supervisor ???????—Position xxxxxxx is being recorded by Supervisor ???????. You cannot record this position at this time.
58. (SUPERVISOR RECORDING) Position xxxxxxx already selected by Supervisor ???????—Position xxxxxxx is selected by Supervisor ???????.
59. (SUPERVISOR RECORDING) Supervisor ??????? has already selected 2 [MAX] positions—One supervisor position can record maximum 2 positions.
60. (ALERT! Group too Small) Trunk Groups xxxxxxx was assigned less than the maximum of ?? members, therefore no members have been saved—The Trunk Group xxxxxxx assigned was less than the maximum allowed numbers. No member is saved.
61. (ERROR, Unable to Comply) Unable to determine which Conference is currently selected—No conference is selected.
62. (ERROR, Unable to comply) This conference group already contains the maximum number of members—The conference has maximum allowed members. No new members can be added to this conference.
63. (Cannot load Device Status) Gateway unavailable—The gateway is not available.

NOTE

For status/error messages pertaining to the equipment rack (local) power supply modules, see paragraph 6.4.4.2.2, item 26. Remote site power supply messages are presented as items 64 through 68 below (including messages pertaining to blown fuses and battery failures).

64. (REMOTE SITE POWER SUPPLY) Remote SCT ?? detects power supply xx failure—Remote SCT ?? detects remote site power supply xx failure.
65. (REMOTE SITE POWER SUPPLY) Remote SCT ?? detects low power supply—Remote SCT ?? detects remote site power supply is low.

66. (REMOTE SITE POWER SUPPLY) Remote SCT ?? detects reserve power supply is off-line—Remote SCT ?? detects remote site reserve power is off-line.
67. (REMOTE SITE POWER SUPPLY) Remote SCT ?? detects battery failure—Remote SCT ?? detects remote site battery failure.
68. (REMOTE SITE POWER SUPPLY) Remote SCT ?? detects fuse is blown—Remote SCT ?? detects remote site fuse is blown.
69. (Name Error) Door Name must be unique—The door name entry should be unique.
70. Some Dial Code(s) is (are) defined but no operator is assigned. Warning—displayed when attempting to define a dial code without an operator. Each defined dial code must have at least one operator assigned to it.
71. Some Dial Code(s) is (are) defined but operators are assigned. Warning—displayed when attempting to define an operator before defining a dial code. Dial codes must be defined before the operators can be assigned.
72. Each Dial Code may access only one operator; User must edit Dial Code before saving phone map. Warning, Override Mode—displayed when attempting to select more than one operator at a time.
73. Ring All flag is set for some Dial Code. Warning, Override Mode— displayed when an incorrect subfunction is attempted in the Extended Definition dialog box.
74. Only one operator can be assigned. Warning, Override Mode— displayed when attempting to select more than one operator.
75. The Undefined code cannot be deleted. Warning—Displayed when attempting to delete a dial code that does not yet exist.
76. No Dial Code is selected. Error—internal error.
77. (NetWork) Backup gateway is in process of synchronizing data, please wait before changing any configuration—Backup gateway is in process of synchronizing data. Not Error Message (status only).
78. (NetWork) Backup gateway has finished synchronizing data, you may continue configuration—Backup gateway finished synchronizing data. Not Error Message (status only).
79. (Warning) A conferencer can have maximum 2 phone cages—One conferencer cannot assign more than two phone cages.
80. (Error) The Conferencer is not defined—Attempting to delete a phone cage from a conference but the conferencer is not defined.
81. (Error) The Cage is not found—Attempting to delete a phone cage from a conferencer but the phone cage cannot be found.

82. (Warning) The instream item is not selected—A PCM value needs to be selected.
83. (Warning) The Mux device is not selected—A Mux device (TMU/CMU) needs to be selected.
84. (Warning) The output cluster is not selected—An output cluster needs to be selected.
85. (Error) Supervisory position can assign ONE Recorder—Supervisor position can only assign one recorder.
86. (Error) Unable to find xxxxxxx in ‘recorder sel’ list box—No recorder is defined and no recorder is displayed in ‘recorder sel’ list box.
87. (Error) Unable to find xxxxxxx in Accessible G/G circuit list box—Cannot find device in the Accessible Circuit list box.
88. (Error) Unable to find xxxxxxxs in ‘Circuits denied access to’ list box—Cannot find device xxxxxxx in the ‘Circuits denied access to’ list box.
89. (Tests unavailable) Gateway is down—Gateway is down and test is unavailable.
90. (Tests unavailable) No positions defined—No position is defined and the test is unavailable.

#### 6.4.4.2.2 Messages Displayed in Bottom Line Status Window (Status Bar Indicators)

NOTE

Specific locations are provided on the SCT/MCT status screen. These are status messages only and no maintenance actions are suggested here to correct fault messages. Information of this nature is provided in other parts of Section 6.

NOTE

Maintenance log does not automatically “pop up” upon the occurrence of a system fault to indicate system on reserve power. (The system has no “auto refresh” capability.) However, the hard copy printout of the status message will report the system going to reserve power with the SCT also reporting operation on reserve power via the DC (Reserve Power) icon.

| STATUS | INDICATION | CONDITION |
|---|---|---|
| 1. Fuse is OK | Fuse | Green condition |
| 2. Fuse is blown | Fuse | Red condition |
| 3. Operating on AC | MAIN Power | Main AC power on |
| 4. Operating on reserve | MAIN Power | Main AC power failure—system is operating on reserve power |
| 5. Reserve power is normal | DC (batteries) (Red) | DC power OK |
| 6. 5-minute reserve | DC (batteries) | Low power condition (DC) |
| 7. Batteries are on-line | DC (on) (Red) | “ON” condition |
| 8. Batteries are off-line | DC (off) | Off-line or not connected |
| 9. System temperature is too high | °F (Red) | Red condition |
| 10. System temperature is normal | °F (Green) | Green condition |
| 11. Gateway 1 is up (solid line—grey icon) | 1 | Network connection between SCT and the gateway is normal |
| 12. Gateway 1 is down (broken line—white icon) | 1 | The SCT lost connection with gateway 1 |
| 13. Gateway 2 is up (solid line—grey icon) | 2 | Network connection between SCT and the gateway is normal |
| 14. Gateway 2 is down (broken line—white icon) | 2 | The SCT lost connection with gateway 2 |
| 15. UPS not connected | UPS (Red) | Not connected to SCT (may be configuration problem, hardware, etc.) |
| 16. UPS on-line | UPS | Communication is established with UPS |
| 17. UPS on battery | UPS | SCT on battery, not AC power |
| 18. Unable to communicate | UPS (Red) | SCT cannot detect the UPS |
| 19. UPS on low battery | UPS (Red) | UPS battery low (‘Shutdown Started’ icon will be displayed) |
| 20. Shutdown started | UPS (Red) | UPS is going to shut down SCT (usually within 30 seconds) |
| 21. System shutdown | UPS (Red) | SCT and UPS are both down |
| 22. Bad Msg In: ?_? | — | SCT received bad incoming message |

| STATUS | INDICATION | CONDITION |
|---|---|---|
| 23. No hConv in SendGwMsg | — | Sending a message to gateway failed |
| 24. Poke Failed: xxxxxxxx/???????? | — | Sending message to gateway failed |
| 25. Power supply modules (green icon) | 24V | Power supplies are OK |
| • Local (Central) | | Local power supplies are OK |
| • Remote | | Remote power supplies are OK |
| 26. Power Supplies | Module down (Red icon) | |
| • Local (Central) | | Watch reserve power. # power supplies failed. |
| • Remote | | Remote power supplies ?* down |

**NOTE:** ?* Indicates a single power supply, two power supplies, or three power supplies. It has the following format:

power supply 1
power supply 2
power supply 3
power supply 1, 2
power supply 2, 3
power supply 1, 3
power supply 1, 2, 3

**NOTE:** # Indicates the number of power supplies that have failed.

### 6.4.4.2.3 Messages in SCT/MCT Maintenance Log and on SCT/MCT Printing Line

**LEGEND:** ???????? indicates device name or map name; ?? indicates cage number or number where it applied; xx indicates slot number or number where it applied; YYYYYYY indicates map name or something that is separate from the ???????.

1. Device *[Device name]* (cage ?? [00 - 1F], slot xx [1-17]) has activated map *[Map name - 7 characters]*—The system detects device ??????? at cage ??, slot xx has activated map YYYYYYY.
2. Global Maps activated—System detects a global map activated.
3. ??????? Device in cage ??, slot xx is of wrong type—System detects ??????? device in cage ??, slot xx is wrong type.
4. ??????? Device in cage ??, slot xx is of unrecognized type—The system detects the ?????? device in cage ??, slot xx is of unrecognized type.
5. The gateway is now operational—The system detects that the gateway is now operational.
6. An SCT is now operational—The system detects that one SCT is now operational.
7. An MCT is now operational—The system detects that one MCT is now operational.
8. Fuse Alarm cleared—The fuse alarm is cleared.

9. Fuse Alarm detected—The fuse alarm is detected.
10. Device ??????? (cage ??, slot xx) has faulty EEPROM—Device ??????? cage ??, slot xx has faulty EEPROM.
11. No device is expected in cage ??, slot xx—No device is expected in cage ??, slot xx.
12. Device ??????? (cage ??, slot xx) is missing config table data—The device ??????? in cage ??, slot xx is missing config table data.
13. Radio ??????? (cage ??, slot xx) has TX confirm failure—The radio ??????? in cage ??, slot xx has TX confirm failure.
14. Device ??????? (cage ??, slot xx) is operational—Device ??????? in cage ??, slot xx is operational.
15. Device ??????? (cage ??, slot xx) is not operational—Device ??????? in cage ??, slot xx is not operational.
16. Device ??????? (cage ??, slot xx) is in diagnostic mode—Device ??????? in cage ??, slot xx is in diagnostic mode.
17. Device ??????? (cage ??, slot xx) is out of diagnostic mode—Device ??????? in cage ??, slot xx is out of diagnostic mode.
18. Device ??????? reported unknown error (dev type:?? error:xx)—Device ??????? reported unknown error (device type = ??, error number = xx).
19. Gateway is unable to open ??????? [File Name]—Gateway is unable to open ??????? file.
20. Device ??????? (cage ??, slot xx) detected an invalid msg parameter—Device ??????? in cage ??, slot xx detected an invalid message parameter.
21. Device ??????? (cage ??, slot xx) detected an invalid key ID—Device ??????? in cage ??, slot xx detected an invalid key ID.
22. Device ??????? (cage ??, slot xx) detected an invalid command—Device ???????? in cage ??, slot xx detected an invalid command.
23. Device ??????? (cage ??, slot xx) detected an invalid msg length—Device ??????? in cage ??, slot xx detected an invalid message length.
24. Unrecognized error message ???????—An unrecognized error message ??????? is detected.
25. Alarm Panel ??????? (cage ??, slot xx) has re-started—Alarm panel ??????? in cage ??, slot xx has re-started.
26. Parallel Bus Error ??????? 81 bus errors in 15 seconds—There are 81 Parallel bus errors in 15 seconds.
27. Device ??????? (cage ??, slot xx) is reporting bus errors—Device ??????? in cage ??, slot xx is reporting bus errors.
28. Parallel Bus Error cleared—Parallel bus error cleared.
29. The gateway is not responding—The gateway is down and is not responding.
30. Device ??????? (cage ??, slot xx) received an invalid block number—Device ??????? in cage ??, slot xx received an invalid block number.
31. Device ??????? (cage ??, slot xx) detected an invalid channel number—Device ??????? in cage ??, slot xx detected an invalid channel number.

32. Device ??????? (cage ??, slot xx) detected an invalid channel type—Device ??????? in cage ??, slot xx detected an invalid channel type.
33. Device ??????? (cage ??, slot xx) detected an invalid key type—Device ??????? in cage ??, slot xx detected an invalid key type.
34. Device ??????? (cage ??, slot xx) reports these Bus Errors: YYYYYYY—Device ??????? in cage ??, slot xx reports bus errors in following list YYYYYYY.
35. Main power alarm—Main power alarm is detected.
36. Low power alarm—Low power alarm is detected.
37. Reserve power alarm—Operation on reserve power alarm is detected.
38. Overheat alarm—Overheat alarm is detected.
39. PCM failure device ??????? path ?—The system detects PCM failure on Device ??????? path ?.
40. PCM audio operating normally—PCM audio operating normally.
41. Position ??????? reports all modules operational—Position ??????? reports all modules operational.
42. Position ??????? reported module error—Position ??????? reported module error.
43. Position ??????? is down—Position ??????? is down.

NOTE

The pots module and the IA display are one device and, thus, report status as one device. If an error message occurs for either one, the SCT will display the status as both.

44. Power supply (1-11) is down—Power supply ?? is down.
45. Remote SCT ?? detects power supply (1-3) Failure—The remote SCT ?? detects the remote site power supply xx failure.
46. Remote SCT ?? detects power supply xx Recovered—The remote SCT ?? detects the remote site power supply recovered.
47. Remote SCT ?? detects power supply is low—The remote SCT ?? detects the remote site power supply is low.
48. Remote SCT ?? detects power supply low is recovered—The remote SCT ?? detects the remote site power supply low is recovered.
49. Remote SCT ?? detects reserve power supply is on-line—The remote SCT ?? detects the remote site reserve power supply is on-line.
50. Remote SCT ?? detects reserve power supply is off-line—The remote SCT ?? detects the remote site reserve power supply is off-line.
51. Remote SCT ?? detects battery defect—The remote SCT ?? detects a remote site battery defect.
52. Remote SCT ?? detects battery defect has been fixed—The remote SCT ?? detects the remote site battery defect has been fixed.

53. Remote SCT ?? detects fuse is blown—The Remote SCT ?? detects the remote site fuse is blown.
54. Remote SCT ?? detects fuse is OK—The Remote SCT ?? detects the remote site fuse is OK.
55. Remote SCT ?? detects all power supply faults are recovered—The remote SCT ?? detects all power supply faults are recovered.
56. Transferring to AC Power—System transferred from reserve power to AC power.
57. Transferring to reserve Power—System transferred from AC power to reserve power.
58. Reserve Power Normal—The system reserve power is normal.
59. 5-minute reserve power warning—Warning that the system reserve power can only last for 5 minutes.
60. Temperature is Normal—The system rack temperature is normal.
61. Temperature is Too High—The system rack temperature is Too High.
62. ??????? reports PCM cluster ?? xx channel YY is Up—Device ??????? reports PCM cluster ?? Main/Standby channel YY is Up.
63. ??????? reports PCM cluster ?? xx channel YY is Down—Device ??????? reports PCM cluster ?? Main/Standby channel YY is Up.
64. Power supply ?? is down—The power supply ?? is down.
65. Power supply ?? is up—The power supply ?? is back up.

### 6.4.5 Supervisor Position (SCT)

Although the system is provided with a separate MCT (the hardware used is identical to that of the SCT), the SCT can be in the System Status Mode Display menu when not being used for reconfiguration or reassignment. The system status faults and error messages discussed in paragraph 6.4.4.2.1 apply to the SCT only.

### 6.4.6 Central Rack Maintenance Position

The central rack maintenance position (see **Figure 6-49**) is used in conjunction with the MCT to monitor or test audio at the operator positions. Although referred to as diagnostic procedures, these tests are essentially performance checks, and the user can configure a selected position to run these diagnostics. The MCT allows maintenance personnel to conduct maintenance and test functions on a “tested position” remotely. The SCT is used by the Supervisor to place the position to be tested into what is referred to as the “Maintenance Busy” mode so that the technician at the MCT, with the diagnostic screen, can run two types of tests: monitoring and audio loopback. The Monitoring and Loop Back tests are set up and run at the MCT. See procedures in paragraph 6.7.

### 6.4.7 Software Network (Gateway) Troubleshooting

If both file servers (redundant pair gateways) go down, the software in the SCT will indicate the loss of the network. This would not be the case if only one of the gateways

were to go down. The system cannot be reconfigured; it will have to operate using existing maps. No error messages can be received. If there is a break in the software link, perform the steps, in sequential order, listed in paragraph 6.4.7.1.

#### 6.4.7.1 Troubleshooting Procedures

This procedure applies to the dual Gateway Computers installed in the central rack.

a) If unable to log onto the SCT:

1. Verify password has been entered correctly.
2. Verify correct user ID being used.
3. Check the cabling between the SCT and the central rack for continuity.
4. Verify Gateway Computer status at SCT.
5. If a Gateway Computer is down, replace the unit. (See paragraph 6.5.8 for removal/replacement procedures.)

NOTE

The SCT/MCT will indicate which Gateway Computer is “down.”

b) If able to log onto the SCT, and no error messages are displayed:

1. At the SCT, access the File Manager. Click on all network drive letters—H, I, J, K—to verify that they have a directory structure (tree).
2. If directory structure is in place, replace in turn:
   - The gateway Interface card in the central rack
   - The alarm unit (alarm processor) in the central rack (see paragraph 6.4.2.2)
   - The System Alarm Panel (see paragraph 6.5.7 for removal/ replacement procedures)
3. If there is no directory structure, and a message is displayed stating: “The specified computer cannot be found”, then one of the gateways is not accessible. Replace Gateway Computer A if drives H and I are inaccessible; replace Gateway Computer B if drives J and K are inaccessible.

NOTE

When obtained from DENRO, the spare (replacement) Gateway Computers are shipped with the hard drive, Ethernet and FIFO cards, and applicable software pre-installed.

### 6.4.7.2 Troubleshooting Indicators

**Tables 6-22** through **6-35** present troubleshooting indications observable at the front panels of important system cards. The tables provide the names of the front panel alarms and indicators, and define the associated indications as related to fault isolation. These tables are to be used in conjunction with the SCT diagnostic information and the troubleshooting data in Section 6.4.8.

The following general guidelines are provided for use in responding to these troubleshooting indications.

- To isolate a central rack card from the system, simply pull the card forward in the slot far enough to disconnect the card from the edge connector on the backplane.
- If the technician pulls or resets a redundant card that is acting as main, the active main function immediately switches to the standby card.
- The following cards support automatic switch over from main to standby; TMU, CMU, Phone Conferencer, Radio Processor, High-Speed Data Link, and Gateway Interface. (The Gateway Computer and associated Gateway Interface CCA currently being used for LAN/CDB communications is identified at the top of the SCT screen.)

NOTE

Gateway Computers will switch over; however, the Gateway Interface CCA does not work in this manner. The two Gateway Interfaces create redundancy, though not in the main/standby sense.

- All cards, except the Ring Generator card, report failures to the SCT/MCT. When troubleshooting the system, first verify card operating status at the SCT/MCT. If, after clearing all failures reported by the SCT/MCT, the trouble still exists, use the troubleshooting procedures contained in Section 6.4.8.

### *Table 6-22. TMU/CMU Cards Troubleshooting Indicators*

| NAME | INDICATION | |
|---|---|---|
| FUSE ALARM | INDICATION | Lights red if fuse blows |
| RUN | INDICATION | Lights green if processor is functioning normally. Continuously flashes if processor is not functioning. |
| IN USE A or B | INDICATION | Illuminates intermittent green while bus (A/B) is in use; if light remains steady ON, the card's bus port (A/B) has failed |
| MAIN | INDICATION | Lights green if card is functioning as main TMU or CMU; off if card is on standby. (If the main card fails, it switches to standby and the card failure is reported at the SCT.) |
| CLOCK FAULT | INDICATION | Lights red throughout reset, latches red for frame error |
| DIGN | INDICATION | May light yellow while card is booting-up; stays lit if boot-up fails |

**NOTE:** In addition to the above indications, see the error messages in paragraph 6.4.4.1. The SCT/MCT provides status/fault messages covering TMU/CMU operational status (e.g., down) and fault messages concerning particular indications at the TMU/SCU.

### *Table 6-23. Phone Conferencer Card Troubleshooting Indicators*

| NAME | INDICATION | |
|---|---|---|
| FUSE ALARM | INDICATION | Lights red if fuse blows |
| DSP | INDICATION | Lights green if DSP functioning normally. Continuously flashes if DSP is not functioning. |
| 186 RUN | INDICATION | Lights green if processor is functioning normally. Continuously flashes if processor is not functioning. |
| IN USE A or B | INDICATION | Illuminates intermittent green while bus (A/B) is in use; if light remains steady ON, the card's bus port (A/B) has failed |
| DIGN | INDICATION | Lights yellow while card is booting-up and remains on if card is the standby card |

### *Table 6-24. Telephone Interface Cards Troubleshooting Indicators*

**NOTE:** Table covers 2/4-Wire PBX, Automatic Signaling Unit (ASU), E&M, and SS-1/4 interfaces.

| NAME | INDICATION | |
|---|---|---|
| FUSE ALARM (Fuse ALM) | INDICATION | Lights red if fuse blows |
| OFF-LINE (All) | INDICATION | Lights red if no communication with conferencer or if microcontroller fails watchdog time-out |
| VOX All except E&M | INDICATION | Lights green for duration of RX voice reception when the signal strength is -22 dBm0 and above |

### *Table 6-25. Radio Processor Card Troubleshooting Indicators*

| NAME | INDICATION | |
|---|---|---|
| FUSE ALARM | INDICATION | Lights red if fuse blows |
| RUN | INDICATION | Lights green if processor is functioning normally. Continuously flashes if processor is not functioning. |
| VOX | INDICATION | Lights green for duration of RX voice reception where the signal strength is -28 dBm0 and above |
| IN USE A or B | INDICATION | Illuminates intermittent green while bus (A/B) is in use; if light remains steady ON, the card's bus port (A/B) has failed |
| KEY | INDICATION | Lights green while operator activates PTT at the position |
| DIGN | INDICATION | Lights steady state yellow when card is in standby mode; flashing yellow indication may mean failed card |
| STBY XMT/RCV | INDICATION | Lights yellow when standby radio transmitter or receiver is selected at the position. (The standby card displays the opposite indication to the main card.) |

### *Table 6-26. Operator Processor Card Troubleshooting Indicators*

| NAME | INDICATION | |
|---|---|---|
| FUSE ALARM | INDICATION | Lights red if fuse blows |
| RUN | INDICATION | Lights green if processor is functioning normally. |
| IN USE A or B | INDICATION | Illuminates intermittent green while bus (A/B) is in use; if light remains steady ON, the card's bus port (A/B) has failed |
| DIGN | INDICATION | **NOTE:** During boot-up, indicator will be on continuously for 5 seconds<br>Continuous flashing yellow indicates no primary ISDN connection with position; solid yellow indicates no secondary connection (split only)<br>**NOTE:** Placing a split-position operator processor card in a non-split position card slot should also cause a solid yellow DIGN indication. |

### *Table 6-27. Alarm Unit Troubleshooting Indicators*

| NAME | **INDICATION** (see Note 2) | |
|---|---|---|
| FUSE ALARM | INDICATION | Lights red if fuse blows |
| RMT ALM | INDICATION | Lights red if any card cage CCA fuse blows or Ring Generator fails |
| A or B BUS | INDICATION | 10 bus line status indicators, light steady yellow if bus line "stuck" low (see Note 1) |
| FLOAT | **Float Level.** (Normal position) F/P LEDs stay on if float voltage drops below 3.5V, indicating a "stuck" driver | |
| LATCH | **Latch.** Pulls A/B bus lines below 0.5V, all F/P LEDs should light (IN USE LEDs should be off) | |
| IN USE A or B | INDICATION | Illuminates intermittent green while bus (A/B) is in use; if light remains steady ON, the card's bus port (A/B) has failed |
| RUN | INDICATION | Lights green if processor is functioning normally. Continuously flashes if processor is not functioning. |
| DIGN | INDICATION | Lights yellow while card is booting-up. There is no standby alarm card; the lit LED implies that the alarm card's map has not been received. |
| | **NOTE 1:** Lines 1–8 = Data; line 9 = In Use (Carrier Sense); line 10 = Strobe<br>**NOTE 2:** SER RCV indicator not used. | |

### *Table 6-28. Gateway Interface Troubleshooting Indicators*

| NAME | INDICATION | |
|---|---|---|
| FUSE ALARM | INDICATION | Lights red if fuse blows |
| DIGN | INDICATION | Lights yellow while card is booting-up and intermittent yellow during data transmissions<br>If it indicates steady yellow after boot-up, the card has lost communication with the associated Gateway Computer |
| IN USE A or B | INDICATION | Illuminates intermittent green while bus (A/B) is in use; if light remains steady ON, the card's bus port (A/B) has failed |
| RUN | INDICATION | Lights green if processor is functioning normally. Continuously flashes if processor is not functioning. |
| SER RCV | INDICATION | Not used |

### *Table 6-29. Remote Radio Processor Troubleshooting Indicators*

| NAME | INDICATION | |
|---|---|---|
| FUSE ALARM | INDICATION | Lights red if fuse blows |
| RUN | INDICATION | Lights green if processor is functioning normally. Continuously flashes if processor is not functioning. |
| IN USE A or B | INDICATION | Illuminates intermittent green while bus (A/B) is in use; if light remains steady ON, the card's bus port (A/B) has failed |
| E-LEAD | INDICATION | Lights green when E-lead is active |
| DIGN | INDICATION | Lights yellow while card is booting up |
| SF IN | INDICATION | Lights green when remote radio frequency is in use (SF mode only) |
| SF OUT | INDICATION | Lights green during transmitter key (SF mode only) |
| M-LEAD | INDICATION | Lights green when M-lead is active |

### *Table 6-30. Maintenance Access Unit Troubleshooting Indicators*

| NAME | INDICATION | |
|---|---|---|
| FUSE ALARM | INDICATION | Lights red if fuse blows |

**NOTE:** Front panel VOX and Time Slot (TS) indicators not used.

### *Table 6-31. High-Speed Data Link Troubleshooting Indicators*

| NAME | INDICATION | |
|---|---|---|
| FUSE ALARM | INDICATION | Lights red if fuse blows |
| RUN | INDICATION | Lights green if processor is functioning normally. |
| IN USE A or B | INDICATION | Illuminates intermittent red while bus (A/B) is in use; if light remains steady ON, the card's bus port (A/B) has failed |
| SER RCV | INDICATION | Serial Receive; lights green when the asynchronous serial controller receives data |
| SER XMIT | INDICATION | Serial Transmit; lights green when the asynchronous serial controller transmits data |

### *Table 6-32. Ring Generator Troubleshooting Indicators*

| NAME | INDICATION | |
|---|---|---|
| FUSE ALARM | INDICATION | Lights red if fuse blows, or ring voltage is bad |

***Table 6-35. System Alarm Panel Troubleshooting Indicators***

| NAME | INDICATION |
|---|---|
| MAIN POWER | GREEN indicates that the system power source is facility AC power.<br>RED indicates the system is operating on battery power due to AC power failure or insufficient power supply module redundancy. |
| LOW POWER | GREEN indicates there is at least 5 minutes of reserve power available.<br>RED indicates there is 5 minutes or less of reserve power (will go back to GREEN after 15 minutes of continuous charge). |
| RESERVE POWER | GREEN indicates batteries are on-line and fully charged (reactivated after 2 hours of continuous charge).<br>RED indicates batteries are off-line.<br>AMBER indicates batteries are on-line and not fully charged. |
| SYSTEM FAULT | GREEN indicates there are no system-reported faults.<br>RED indicates that the system is operating in a faulted mode. |
| OVERHEAT | GREEN indicates rack temperatures are normal.<br>RED indicates a high-temperature condition in one of the racks. |
| ALARM RESET/TEST | Illuminates RED to indicate system alarm condition or TEST button pressed. |

### 6.4.8 Troubleshooting

The following paragraphs, in conjunction with the troubleshooting flowcharts of **Figures 6-11** through **6-37**, constitute the ETVS troubleshooting guide for LRUs. [The charts are intended to enable the technician to isolate a fault to the appropriate LRU(s).] The system is designed so that a fault in one area will not affect the remaining system operations. Troubleshooting (and corrective maintenance) must not interfere with or affect the operational portion of the system. Therefore, voltage/signal measurements (e.g., cable checks) made directly at the input/output of the LRUs must be kept to a minimum. Any system or position downtime that would result from a troubleshooting check must be coordinated in advance with ATC.

#### 6.4.8.1 Troubleshooting Flowchart Locator Index

The Troubleshooting Flowchart Locator Index (see **Table 6-36**) provides a convenient means for locating the proper flowchart to be used in handling a particular problem. The table provides the figure number, description of the problem (top block in each flowchart), and the page number at which the specified flowchart is located or begins. **Table 6-36** is divided into three sections, each of which addresses a particular category of reported faults, which are listed as follows:

- System Reported Faults
- SCT Icon Reportable Faults
- User Reported Faults

The source of the fault report (i.e., system, SCT, or user) determines the applicable portion of the table to be used. The names of the charts are general so that the technician may use one chart to troubleshoot several related problems. For instance, audio problems at a position use **Figure 6-27**, but **Figure 6-26** also provides direction for the troubleshooting of faulty position volume. Not all position audio problems can always be expected to be found at the position, however. The symptom may be missing transmit or receive audio at a position, but the trouble may be found with a radio or telephone interface card, cabling, patch panel, or lightning suppressor. The following flowcharts cannot address every possible failure. Common sense and the technician's knowledge of the system will often help isolate and identify the problem.

#### 6.4.8.2 Troubleshooting Flowcharts

**Figures 6-11** through **6-37** are arranged and organized to present a logical sequence of troubleshooting paths to follow, including yes/no decision points and appropriate responses (corrective actions) to remedy the faults. The flowcharts cover the entire system, and include front panel indicators that may isolate the fault to a particular LRU (CCA, position, or unit). Each chart is based on a problem or fault listed in the top block(s) of the diagram (as listed in **Table 6-36**).

The flow of decisions and actions is complete when the fault has been identified, isolated, and remedied (e.g., via RESET button, verification of audio signal presence or absence, replacement of a blown fuse or LRU, etc.). In some cases, the problem may be resolved via the use of referenced position confidence tests, equipment performance checks, unit self-tests, etc., which are intended to assist in the identification and isolation of the fault, the resolution of which may result in the physical replacement of one or more LRUs.

Before undertaking extensive troubleshooting steps, the technician should consider obvious conditions of the equipment in question. For instance, if an SCT is not functioning, the technician should first check that power is connected and being supplied to the unit. (If UPS units are being used, they should also be checked before performing further troubleshooting tasks.) This also applies to position modules that might have been inadvertently disconnected or powered-off. Missing transmit or receive audio can also be caused by disconnected or faulty demarcation wiring or patch panels. If radio or telephone are circuits in question, the technician should first verify that the circuit is operational before troubleshooting the ETVS. If other positions also have the resources in question assigned, the technician should determine if the fault exists there, too. The same faults appearing at different positions might indicate failures in common equipment such as wiring, patch panels, or lightning suppressors. If the flowcharts fail to lead the technician to a successful conclusion, this common equipment should also be considered. If the cause of the failure cannot be located and

corrected within a reasonable amount of time, the technician should consider seeking Second Level Support from the Depot.

***Table 6-36. Troubleshooting Flowchart Locator Index***

| FIGURE NO. | PROBLEM | PAGE NO. |
|---|---|---|
| | **System Reported Faults** | |
| 6-11 | Radio Interface reports down | 6-128 |
| 6-12 | Conferencer reports down | 6-129 |
| 6-13 | Remote Radio Interface reports down | 6-130 |
| 6-14 | Supervisory Record Interface (central card) reports down | 6-131 |
| 6-15 | CMU reports down | 6-132 |
| 6-16 | TMU reports down | 6-133 |
| 6-17 | • Gateway Interface (central card) reports down<br>• Alarm Processor (central card) reports down<br>• Parallel I/O (central card) reports down | 6-134 |
| 6-18 | • Telephone Interface Card(s) reporting down<br>• All phones assigned to a particular Conferencer pair are reporting down | 6-135 |
| 6-19 | High-Speed Data Links (HSDL) report down | 6-136 |
| 6-20 (3 sheets) | • SCT indicates “Position Down” or “Down”<br>• Operator Processor reports “Down”<br>• Position Module is reported “Down”<br>• Remote position not operational or reported “Down” | 6-137 |
| | **SCT Icon Reportable** | |
| 6-21 | • Reserve Power icon Red<br>• TEMP icon Red<br>• UPS icon Red | 6-140 |
| 6-22 | Power Supply icon Red/Main Power icon Green | 6-141 |
| 6-23 | SCT Network icon turns White (Notes 5a, 5b) | 6-142 |
| 6-24 (3 sheets) | Fuse Alarm icon Red | 6-143 |

*Table 6-36. Troubleshooting Flowchart Locator Index (Continued)*

| FIGURE NO. | PROBLEM | PAGE NO. |
|---|---|---|
| | **User Reported Faults** | |
| 6-25 | • Position illumination (back lighting) and indicator problems (LEDs)<br>• No Video on TED Display | 6-146 |
| 6-26 | Problems with position volume control | 6-148 |
| 6-27 (4 sheets) | • Position audio problems (Notes 1, 2, and 3)<br>• Missing transmit or receive audio<br>• Phone interface not dialing out(missing transmit signaling)<br>• No speaker audio | 6-149 |
| 6-28 | • SCT is locked up and not responding (Note 4)<br>• No Video on SCT<br>• Unable to log onto SCT<br>• UPS not operating | 6-153 |
| 6-29 | M/S TX/RX selector problems | 6-154 |
| 6-30 | Remote Alarm/SAP problems | 6-155 |
| 6-31 | Supervisory Record problems | 6-156 |
| 6-32 | Door release problems | 6-157 |
| 6-33 | IA display problems (LCD display not working) | 6-158 |
| 6-34 | Problems with PTT | 6-159 |
| 6-35 (3 sheets) | Keys do not respond at:<br>• Hardkey positions<br>• TED positions | 6-160 |
| 6-36 | Remote Radio PTT problems | 6-163 |
| 6-37 | Power Supply Operation out of Tolerance | 6-164 |

Notes: 1 Not all faults (e.g., audio) are reportable to SCT. This includes missing and/or defective board components (e.g., burnt resistors).

2 Most faults reported to the SCT are associated with the digital circuitry.

3 Position audio problems include missing transmit or receive audio and may not be related to a failure at the position. Interface cards, cables, and lightning suppressors should also be considered.

4 Verify that AC power is available at the SCT and UPS before troubleshooting the unit(s)

5a If the Network icon turns WHITE (indicating that a network connection is lost) on only one SCT: Reset the suspect SCT first. If the icon still WHITE, replace the SCT. If, after replacing the SCT, the icon returns to normal, replacement of the Gateway will not be necessary. However, if the icon still remains WHITE, the Gateway PC must be replaced.

5b If the Network icon turns WHITE on more than one SCT: Proceed with the troubleshooting procedure as shown in the chart.

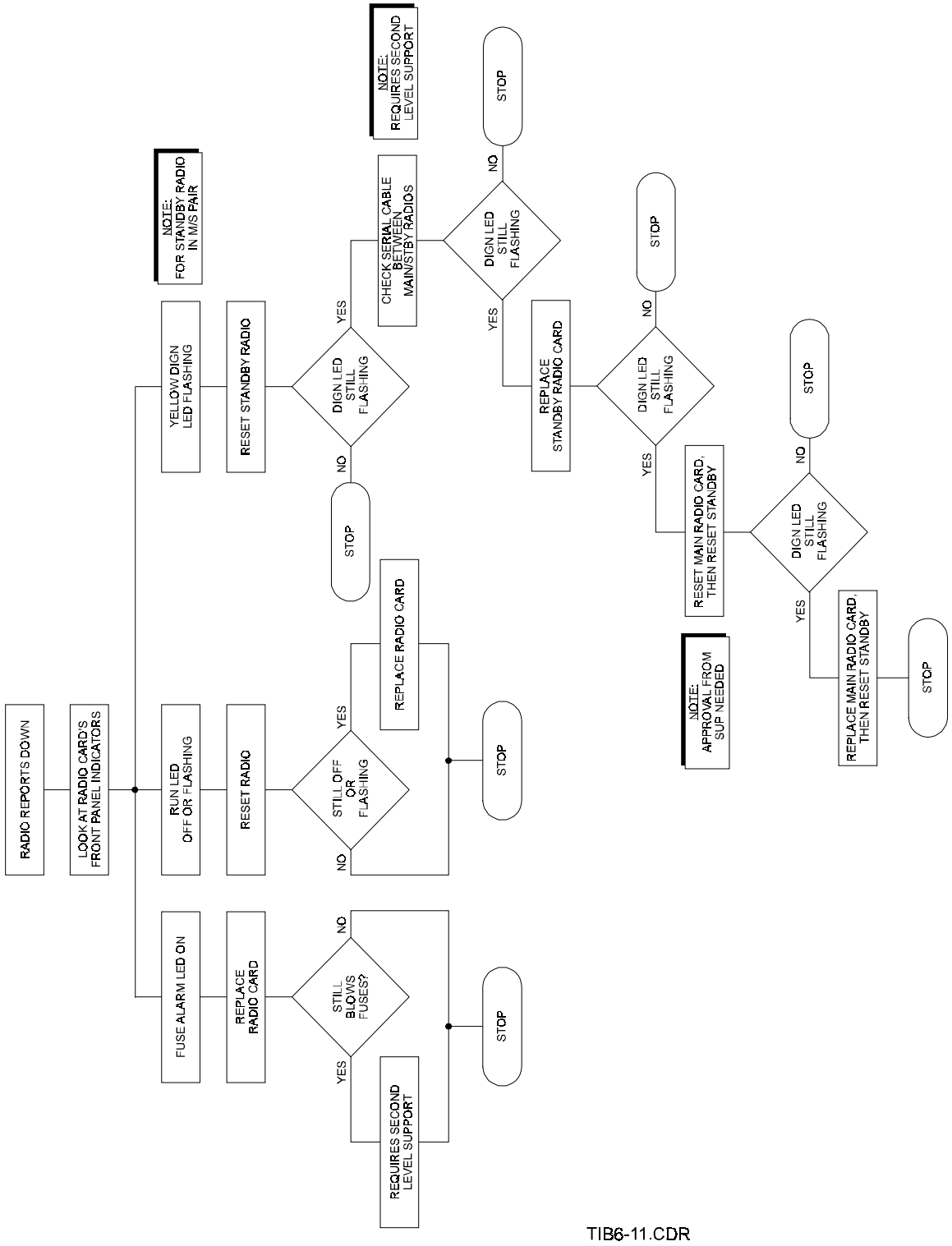


*Figure 6-11. System Reported Faults: Radio Reports Down*

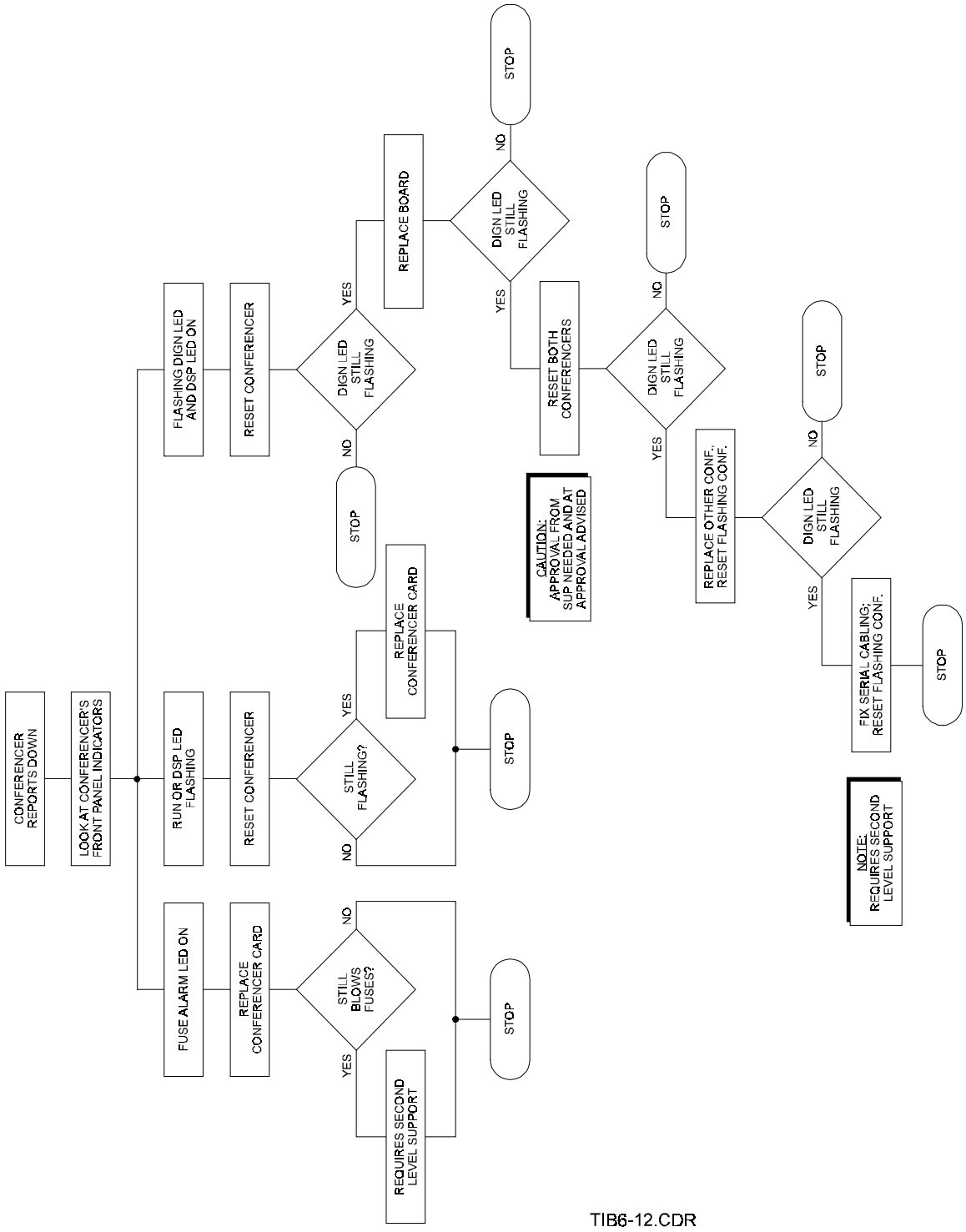


*Figure 6-12. System Reported Faults: Conferencer Reports Down*

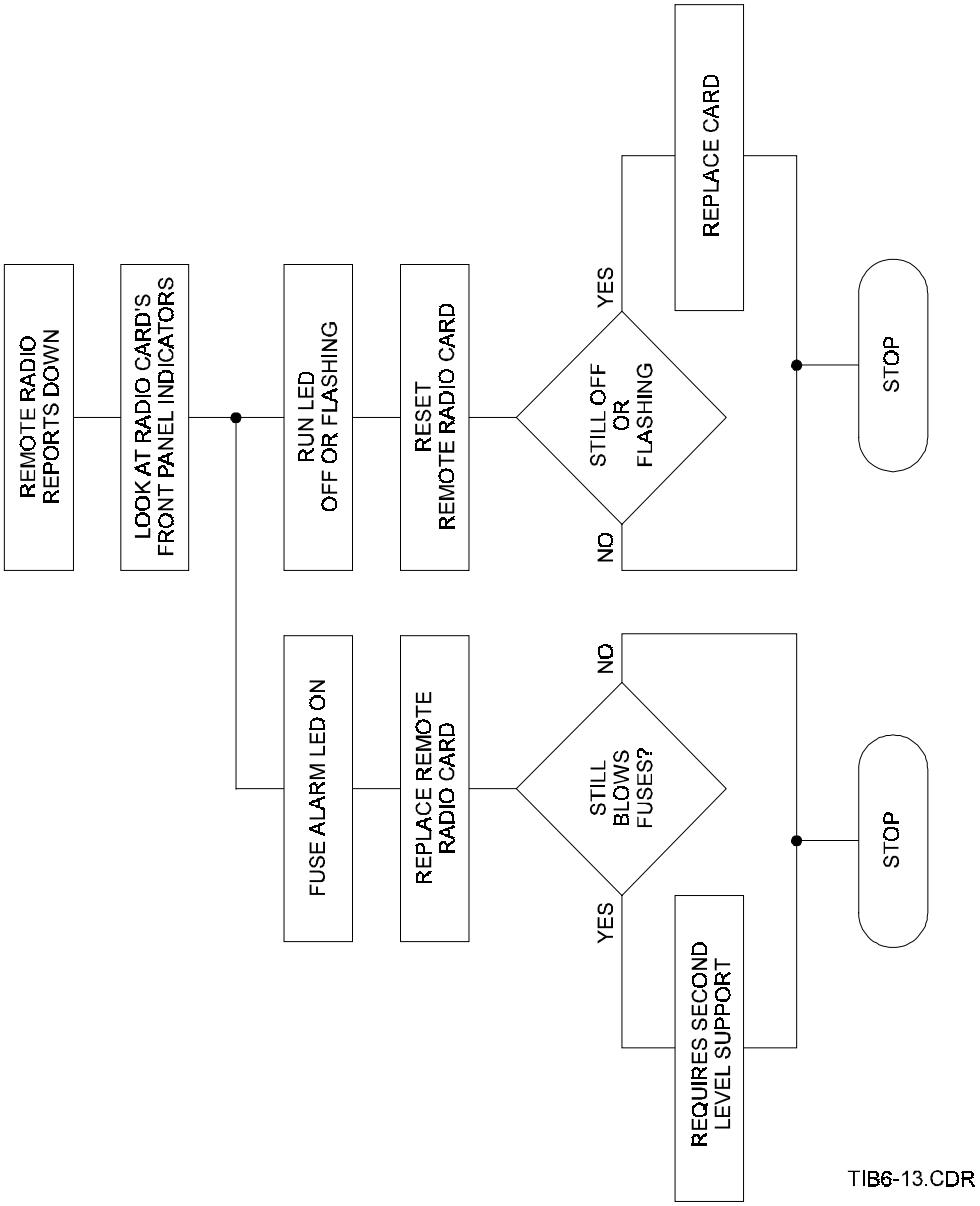


***Figure 6-13. System Reported Faults: Remote Radio Reports Down***

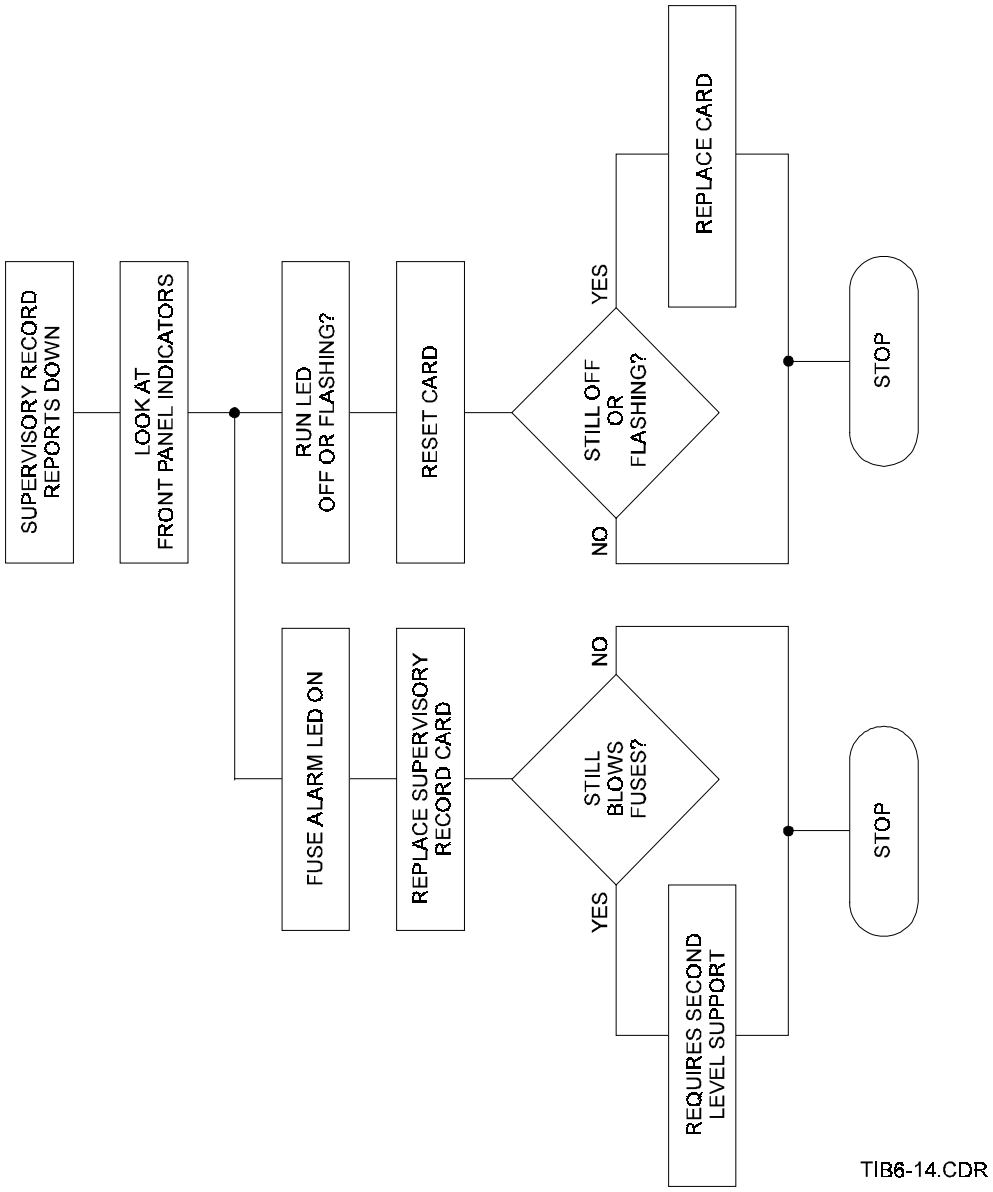


*Figure 6-14. System Reported Faults: Supervisory Record Reports Down*

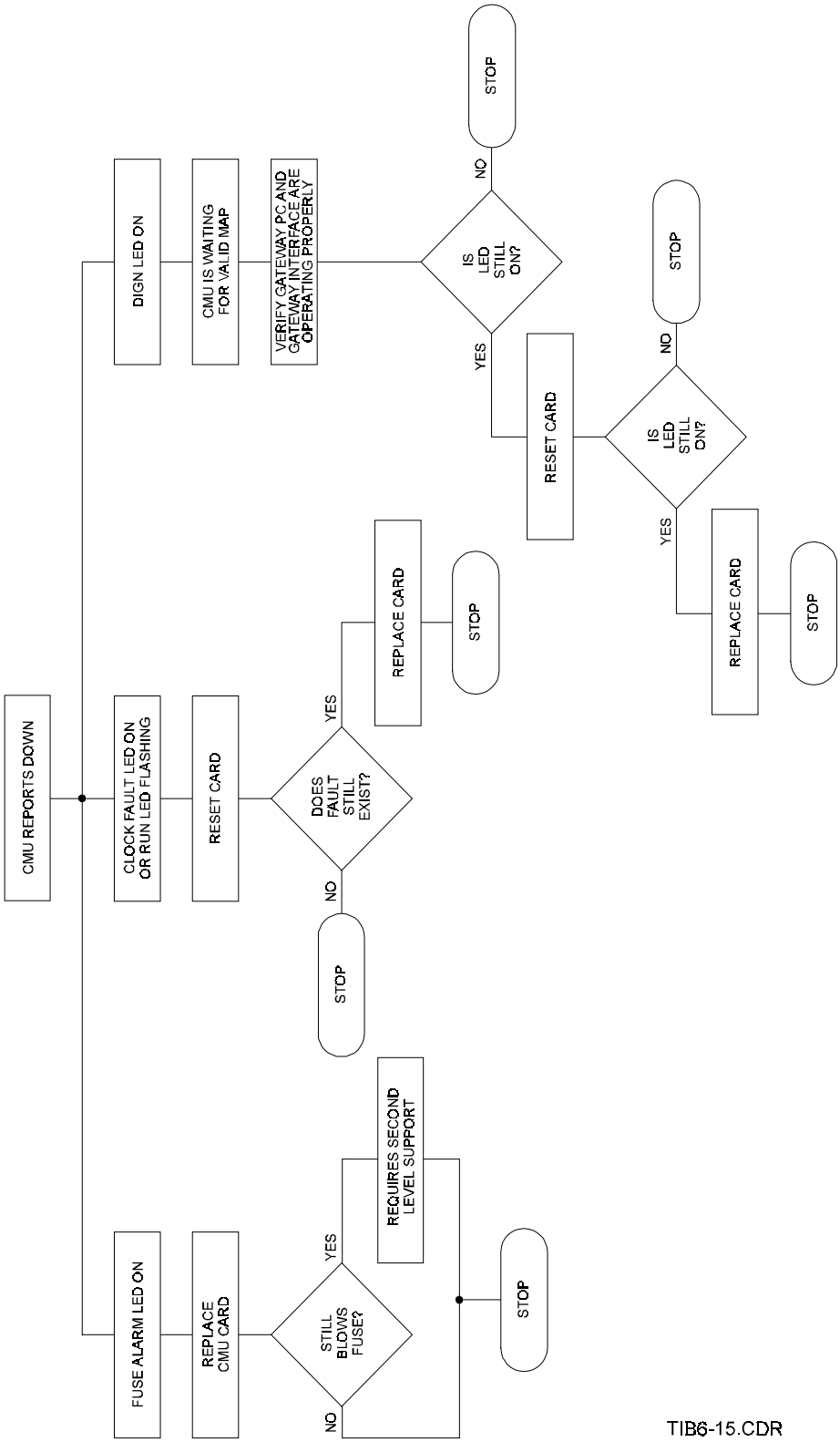


*Figure 6-15. System Reported Faults: CMU Reports Down*

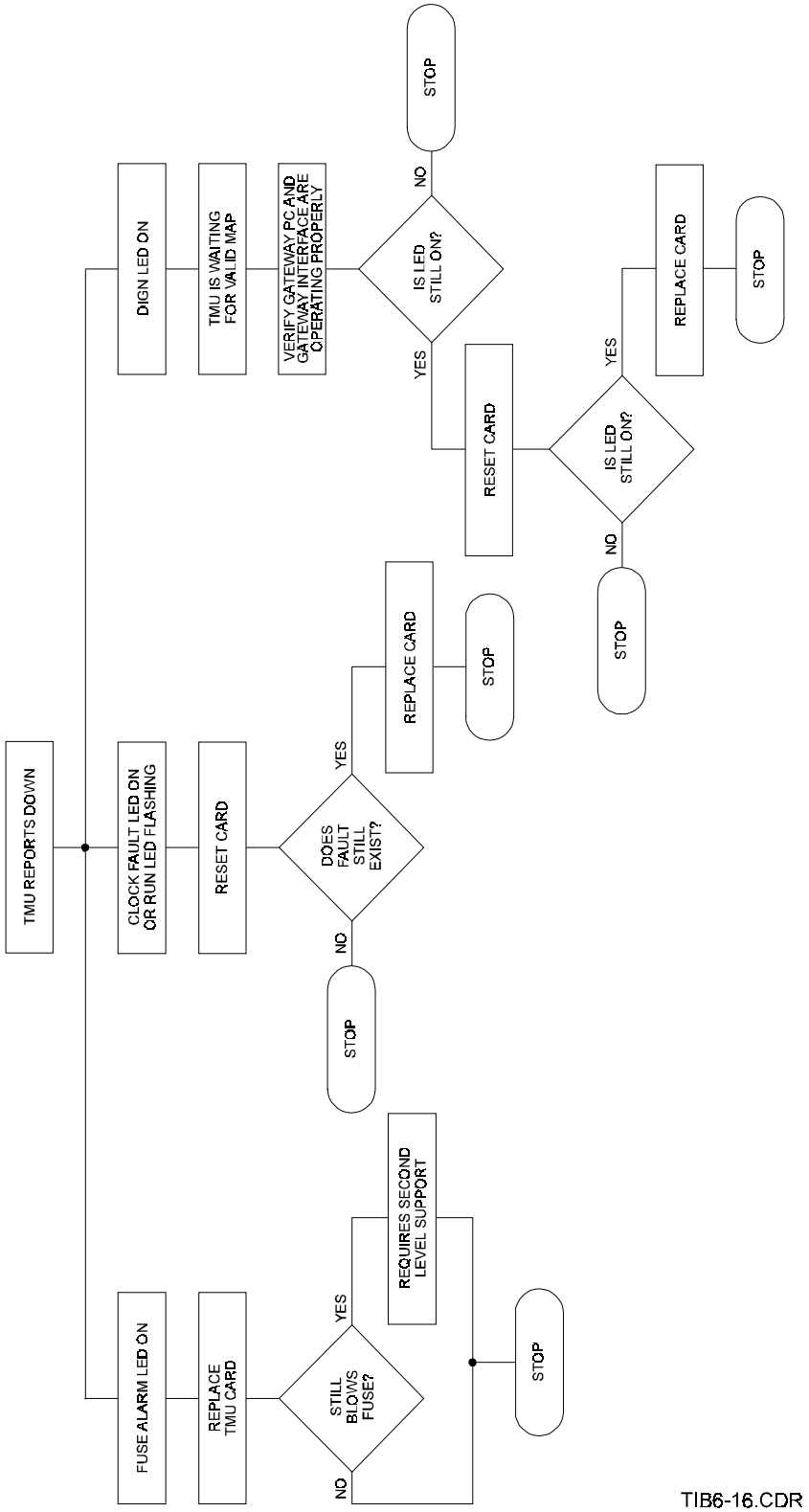


*Figure 6-16. System Reported Faults: TMU Reports Down*

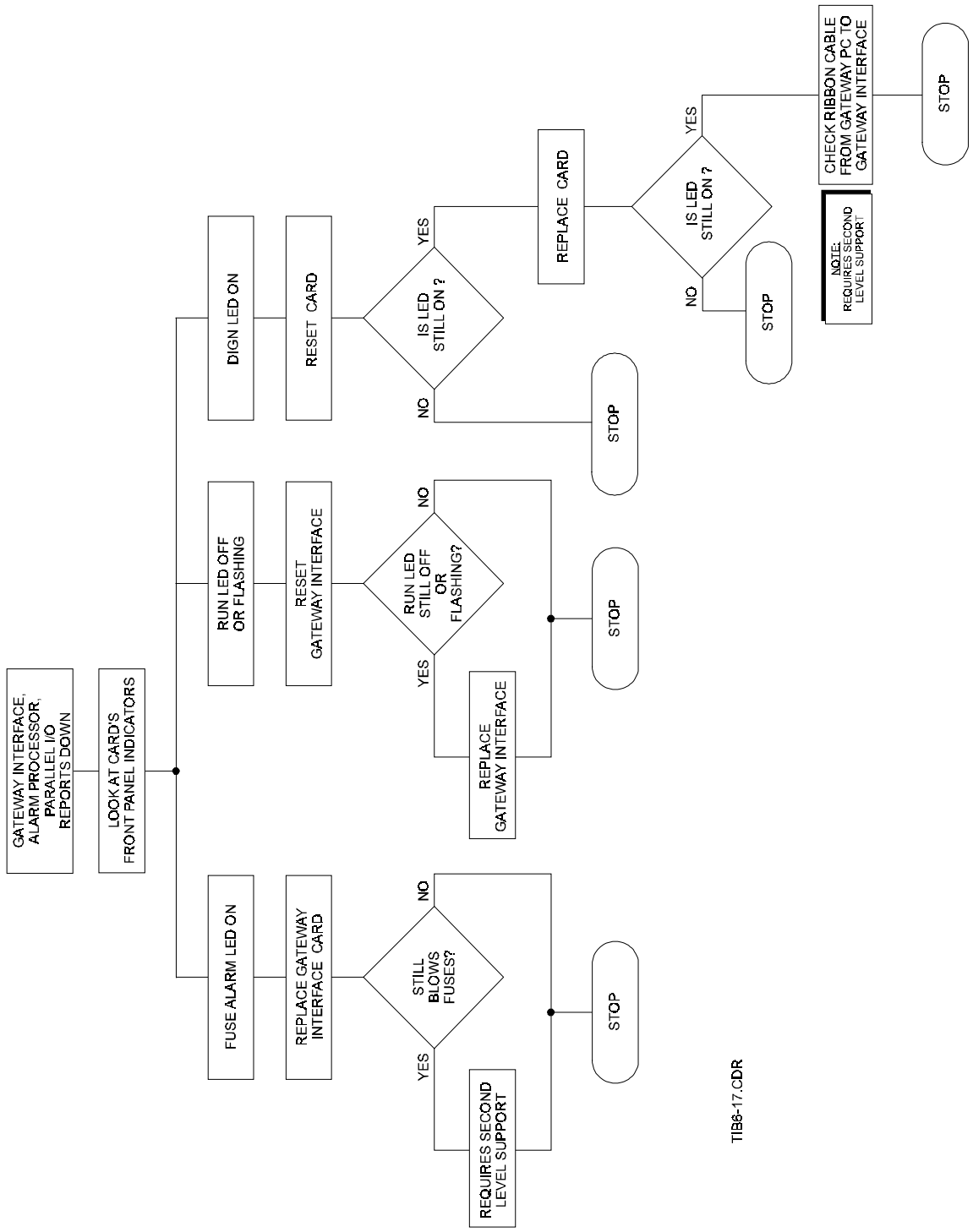


***Figure 6-17. System Reported Faults: Gateway Interface/Alarm Processor/Parallel I/O Reports Down***

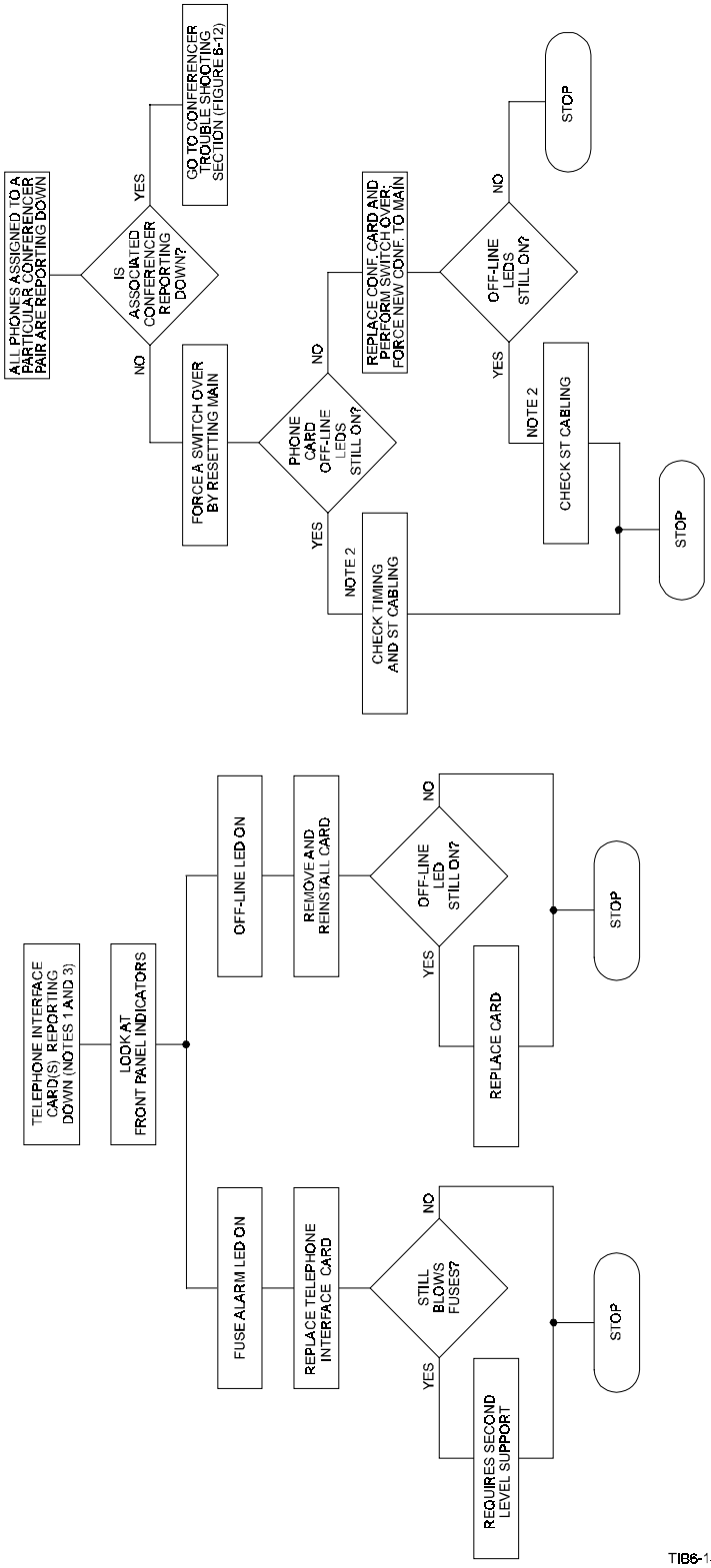


NOTES:
1. THIS DIAGRAM COVERS ASU, E&M, 2W/4W PBX AND SS1/SS4 CARDS.
2. IF ANY CABLE IS SUSPECTED TO BE DEFECTIVE, SECOND LEVEL MAINTENANCE RESOURCES WILL BE REQUIRED TO CHECK AND, IF NECESSARY, REPLACE.
3. THIS APPLIES TO ALL FIVE TYPES OF TELEPHONE CARDS USED IN THE SYSTEM (SEE NOTE 1).

***Figure 6-18. System Reported Faults: Phone Card Reports Down and All Phones Assigned to a Particular Conferencer Pair Are Reporting Down***

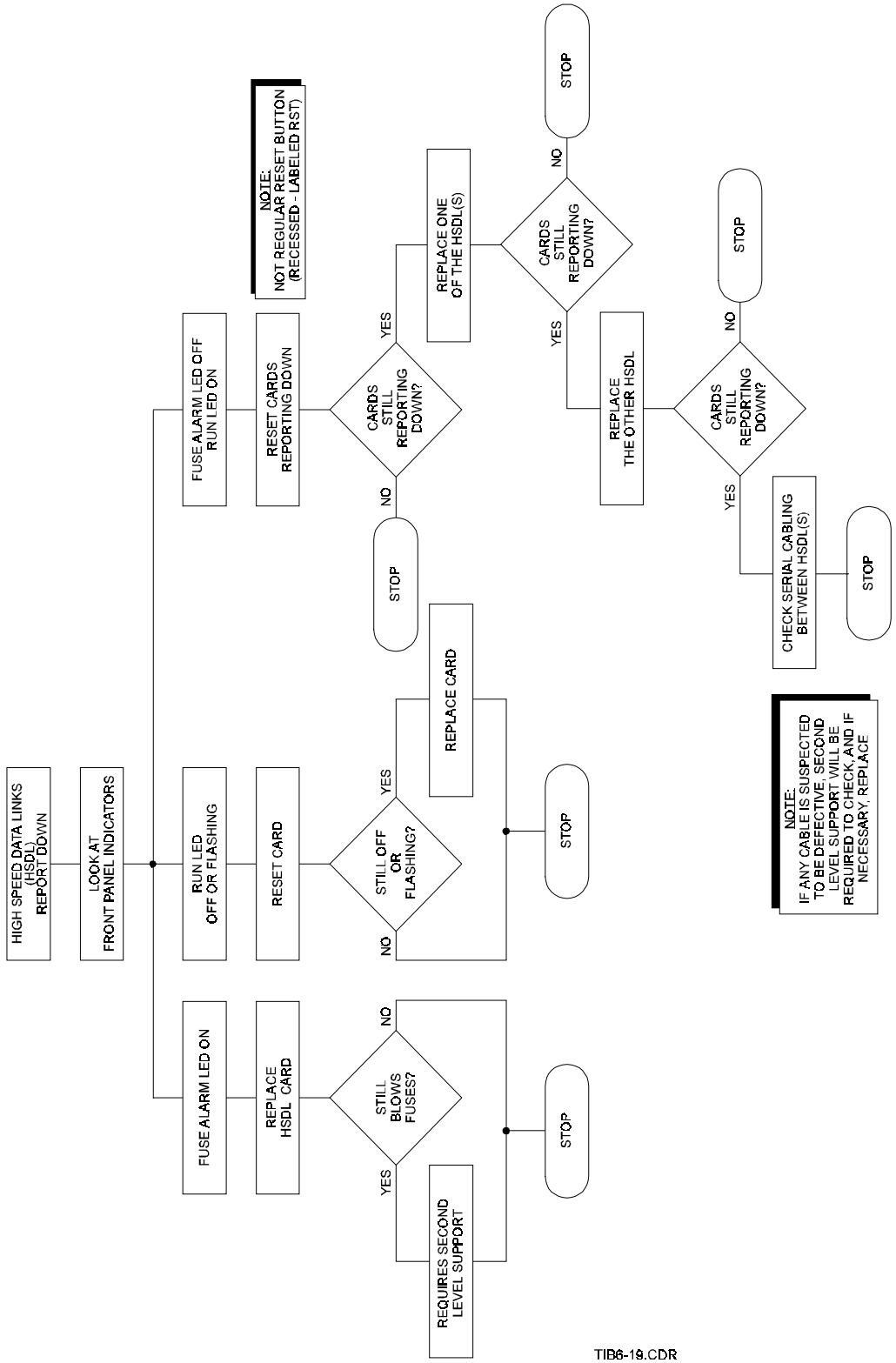


*Figure 6-19. System Reported Faults: High-Speed Data Links (HSDL) Report Down*

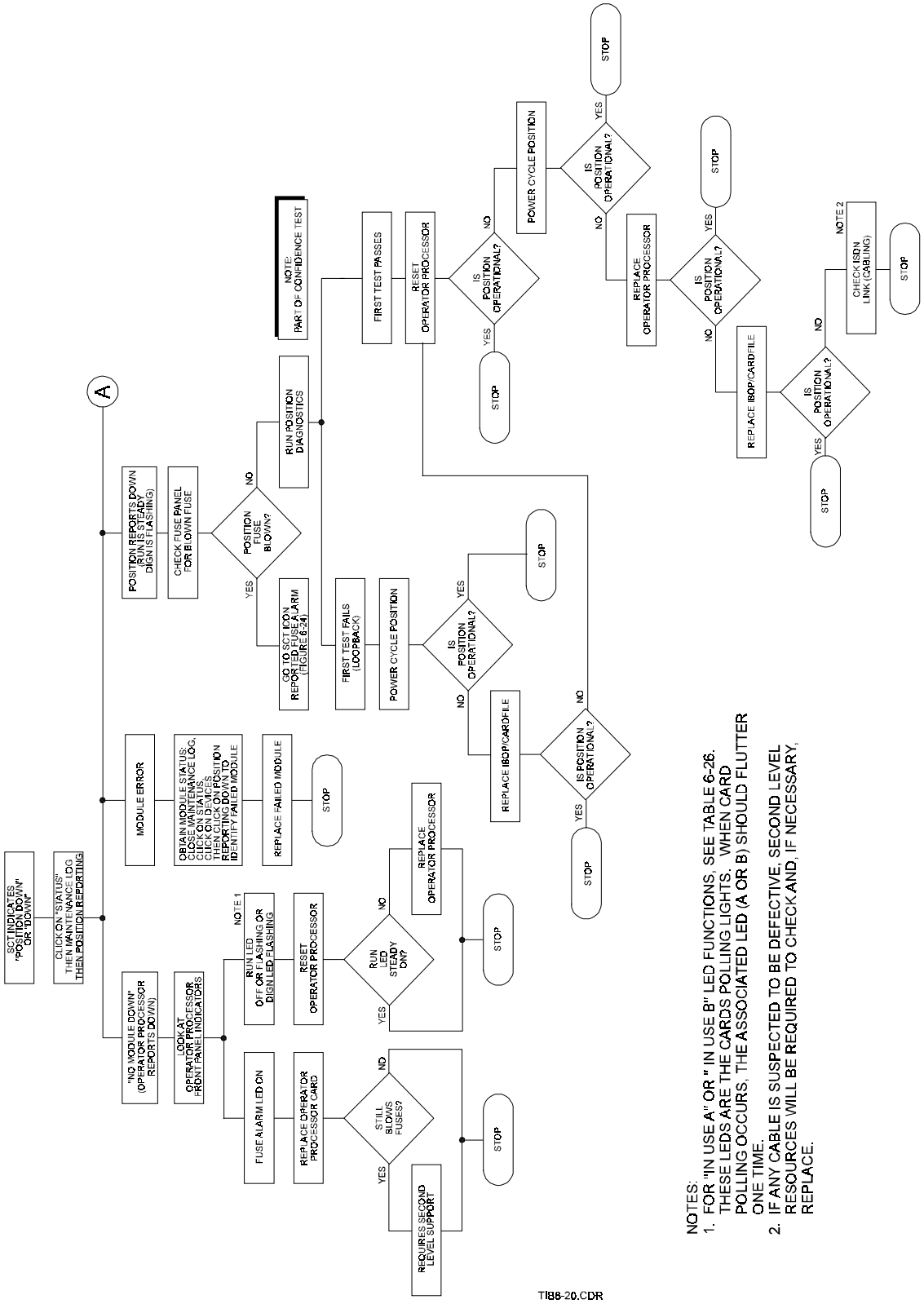


NOTES:
1. FOR "IN USE A" OR " IN USE B" LED FUNCTIONS, SEE TABLE 6-26. THESE LEDS ARE THE CARDS POLLING LIGHTS. WHEN CARD POLLING OCCURS, THE ASSOCIATED LED (A OR B) SHOULD FLUTTER ONE TIME.
2. IF ANY CABLE IS SUSPECTED TO BE DEFECTIVE, SECOND LEVEL RESOURCES WILL BE REQUIRED TO CHECK AND, IF NECESSARY, REPLACE.

***Figure 6-20 (Sheet 1 of 3). System Reported Faults: SCT Indicates "Operator Interface Down"***

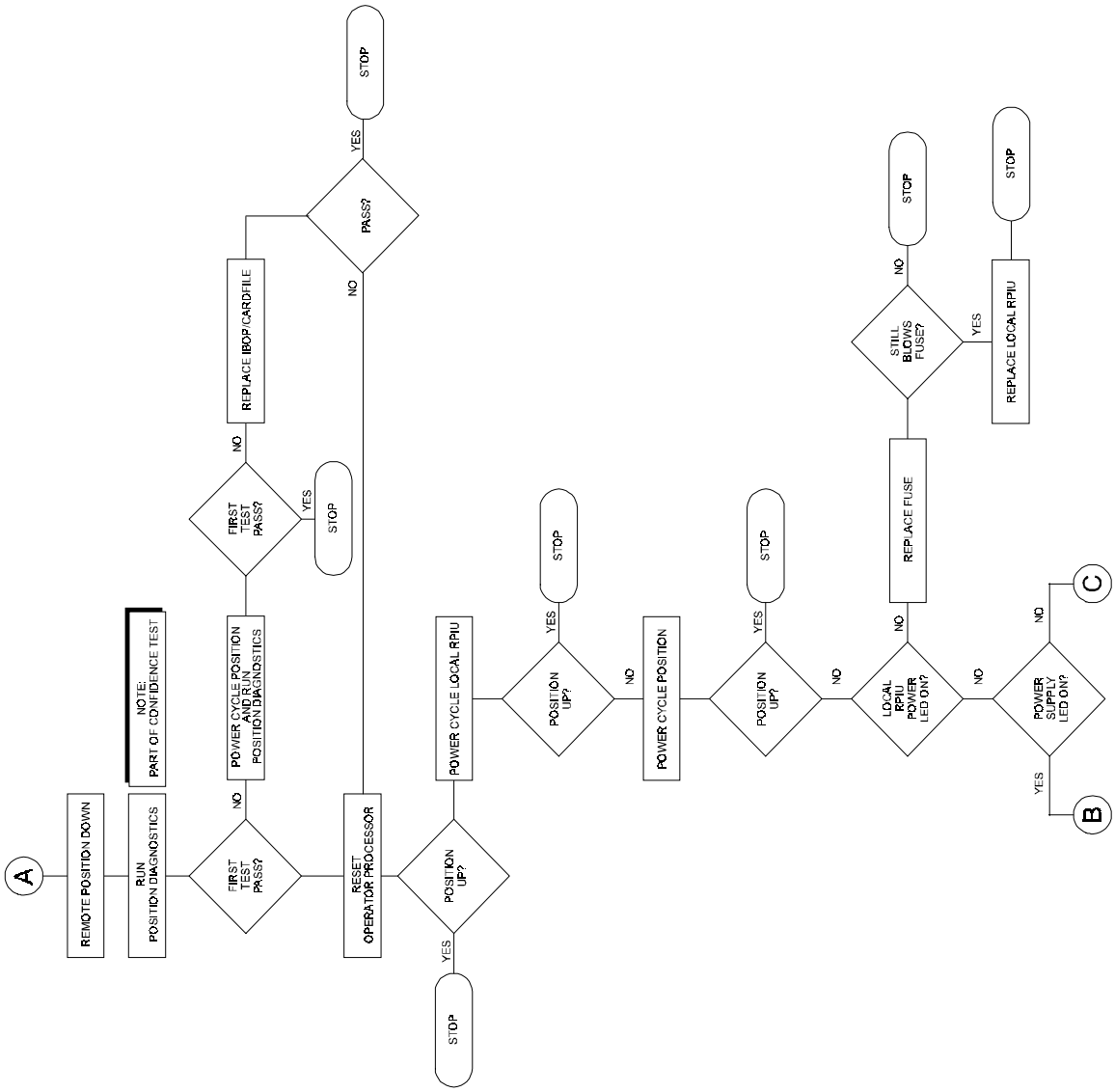


***Figure 6-20 (Sheet 2 of 3). System Reported Faults: SCT Indicates "Operator Interface Down"***

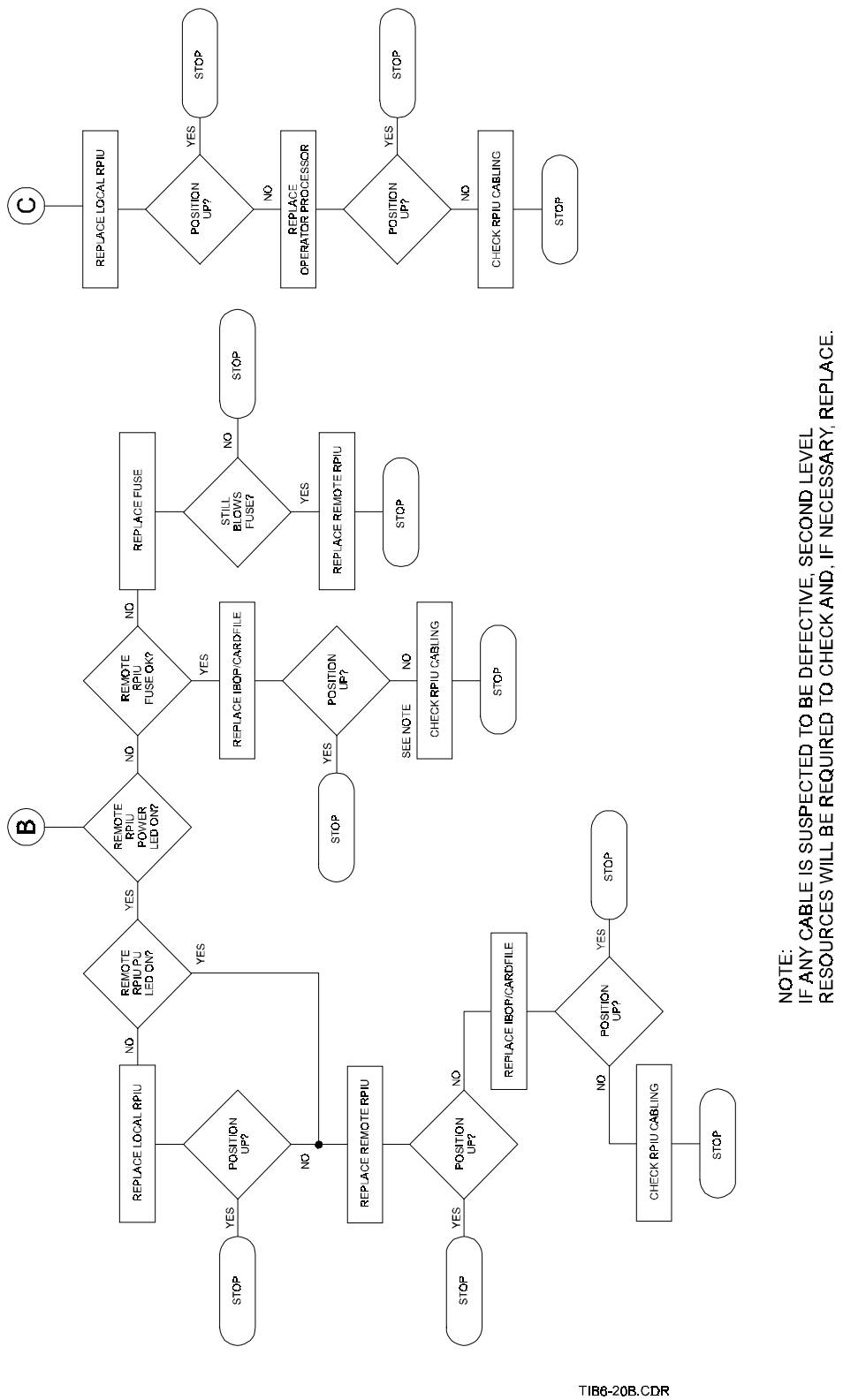


***Figure 6-20 (Sheet 3 of 3). System Reported Faults: SCT Indicates "Operator Interface Down"***

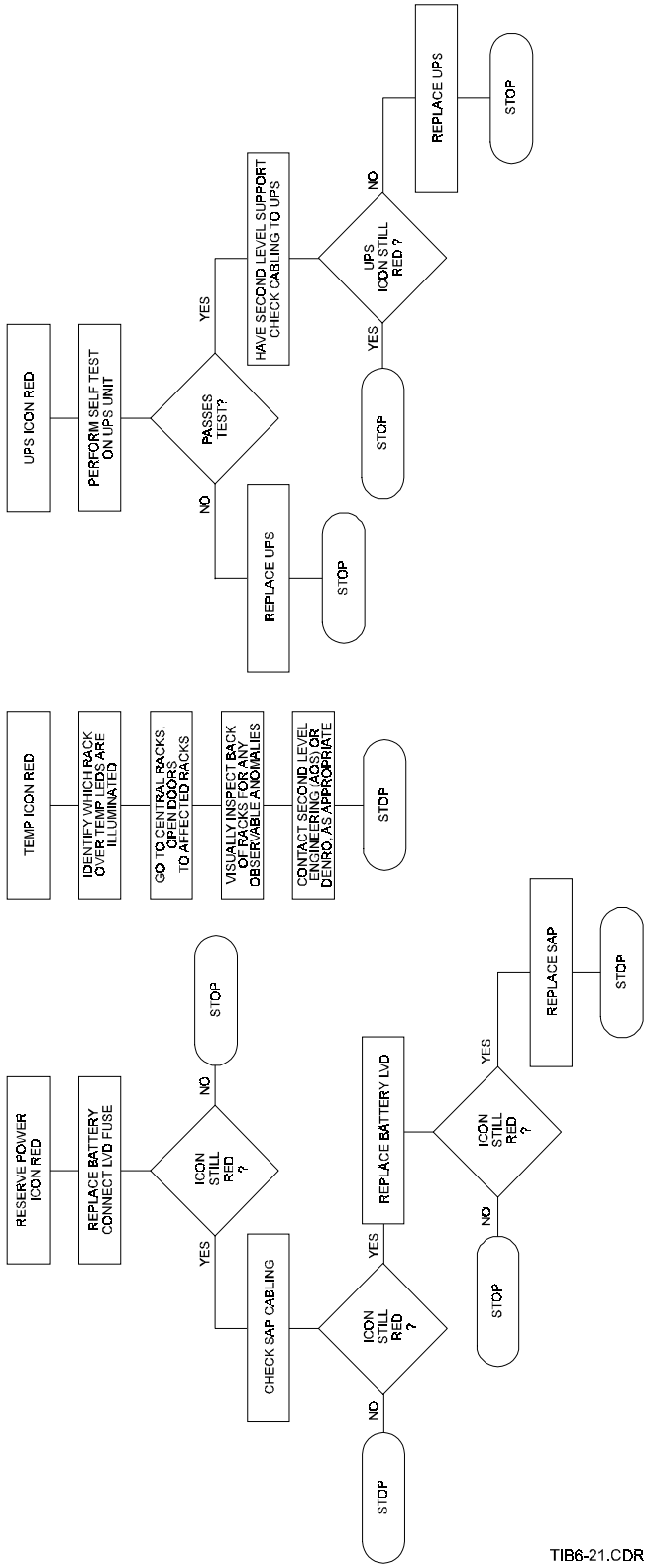


*Figure 6-21. SCT Icon Reportable: Reserve Power, TEMP, and UPS Icons Red*

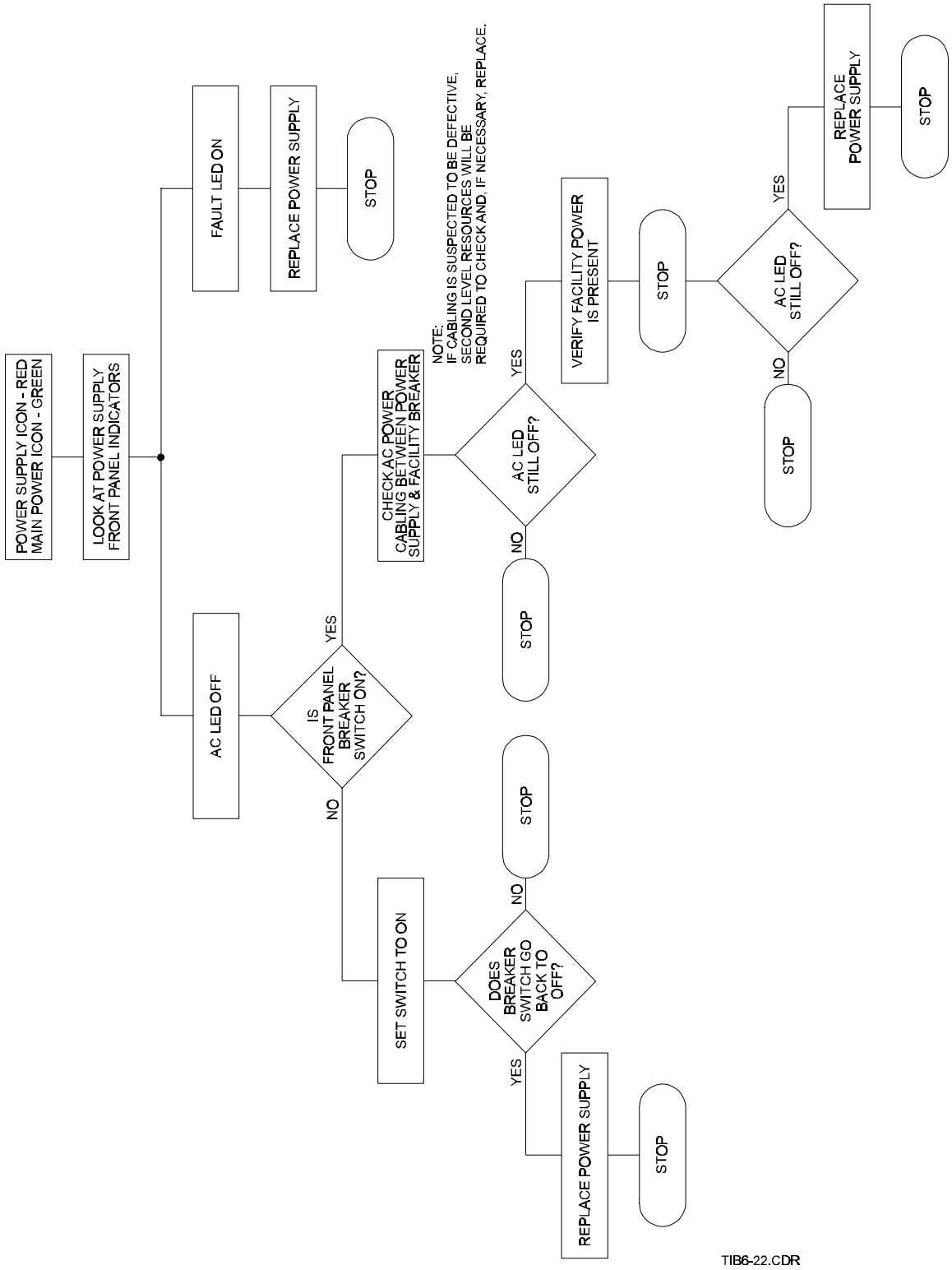


*Figure 6-22. SCT Icon Reportable: Power Supply Icon Red/Main Power Icon Green*

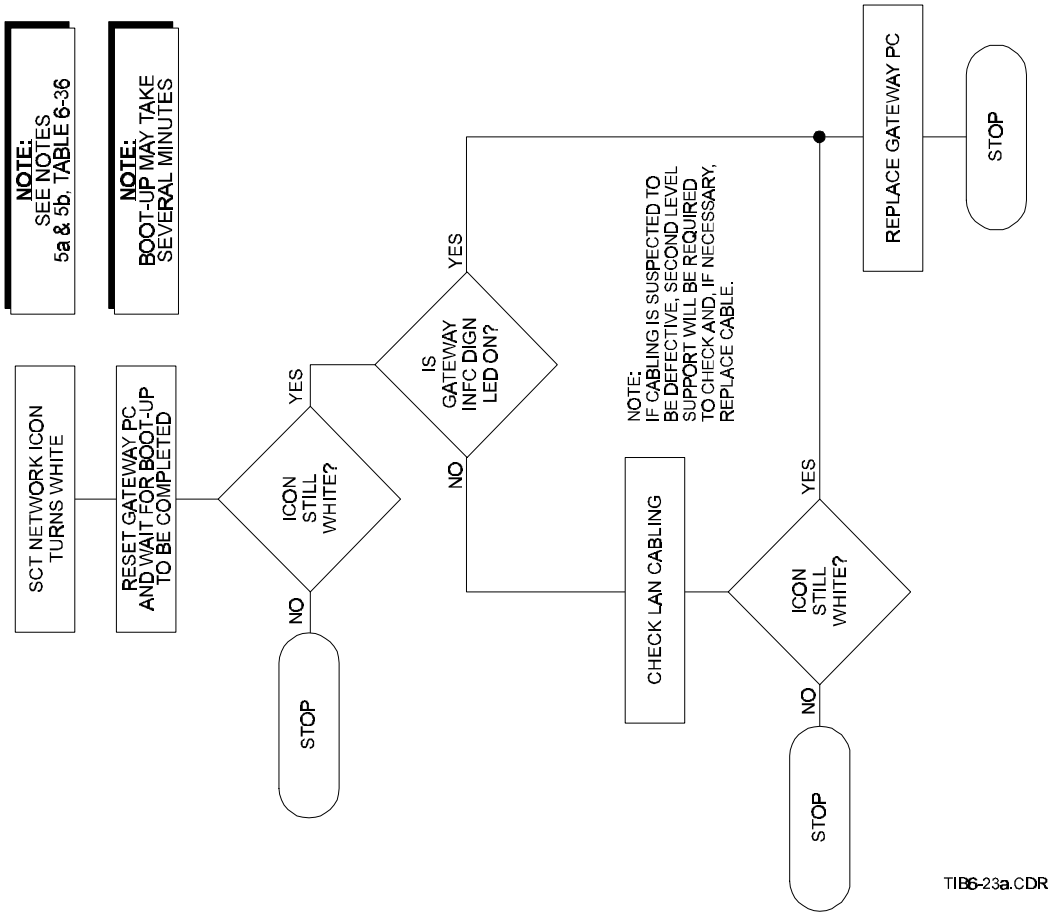


***Figure 6-23. SCT Icon Reportable: SCT Network Icon Turns White***

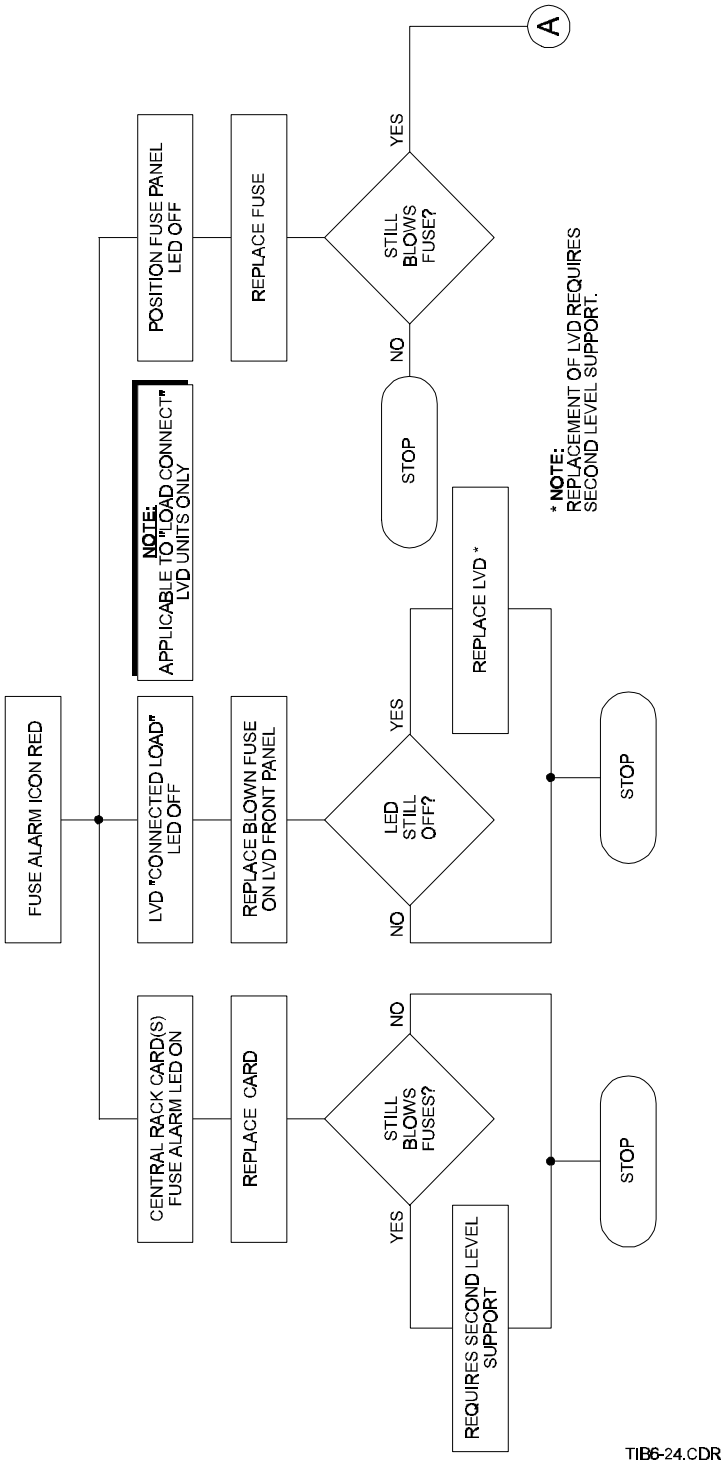


*Figure 6-24 (Sheet 1 of 3). SCT Icon Reportable: Fuse Alarm Icon Red*

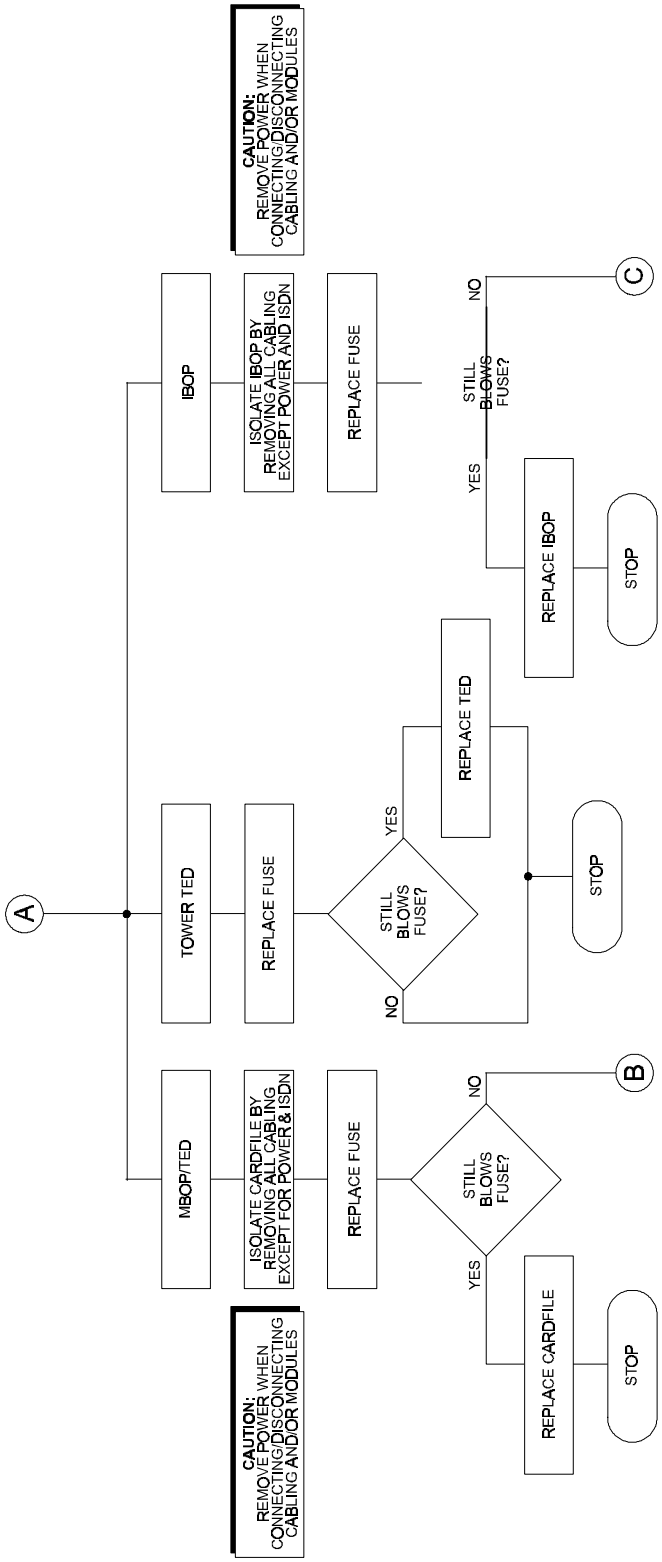


*Figure 6-24 (Sheet 2 of 3). SCT Icon Reportable: Fuse Alarm Icon Red*

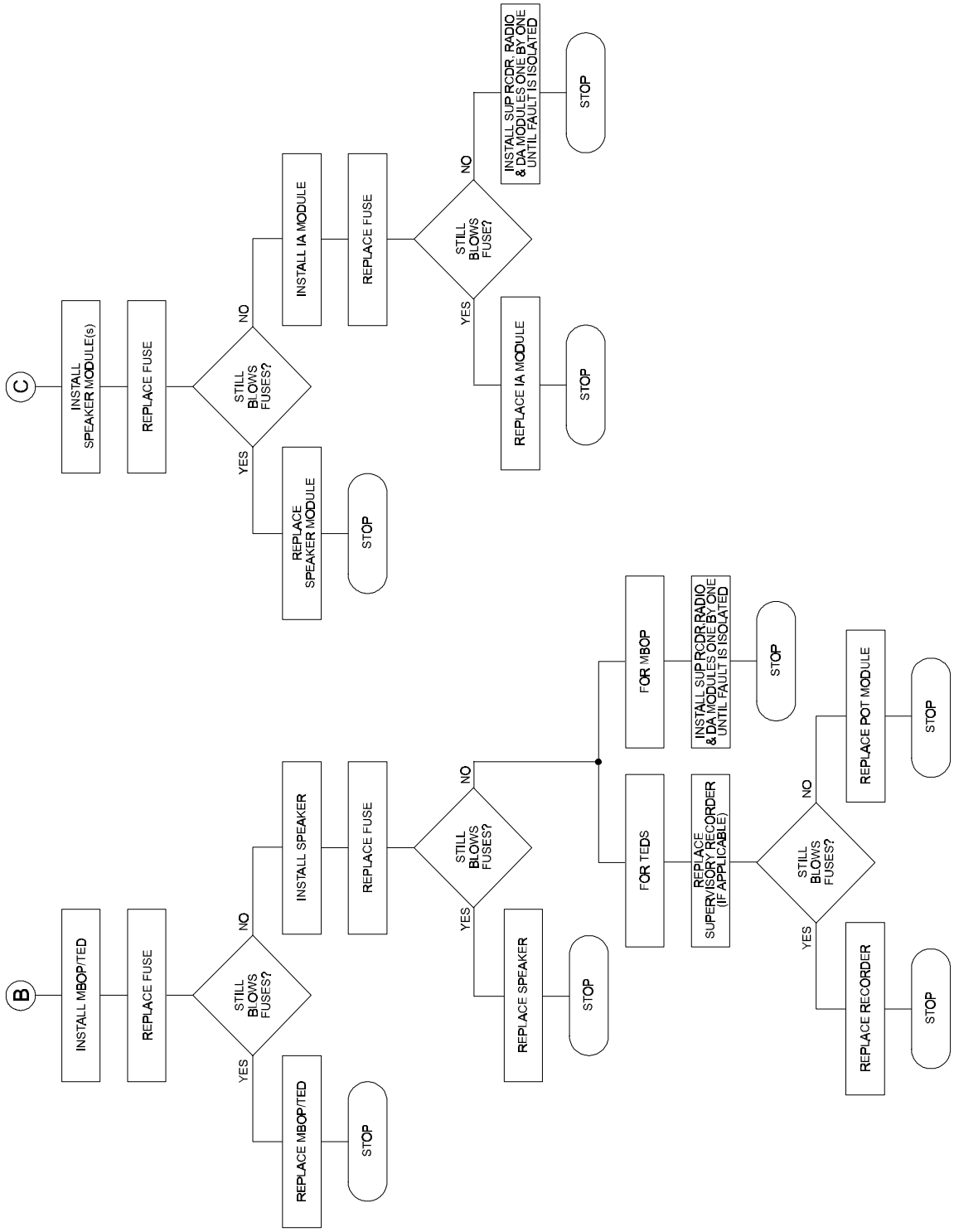


*Figure 6-24 (Sheet 3 of 3). SCT Icon Reportable: Fuse Alarm Icon Red*

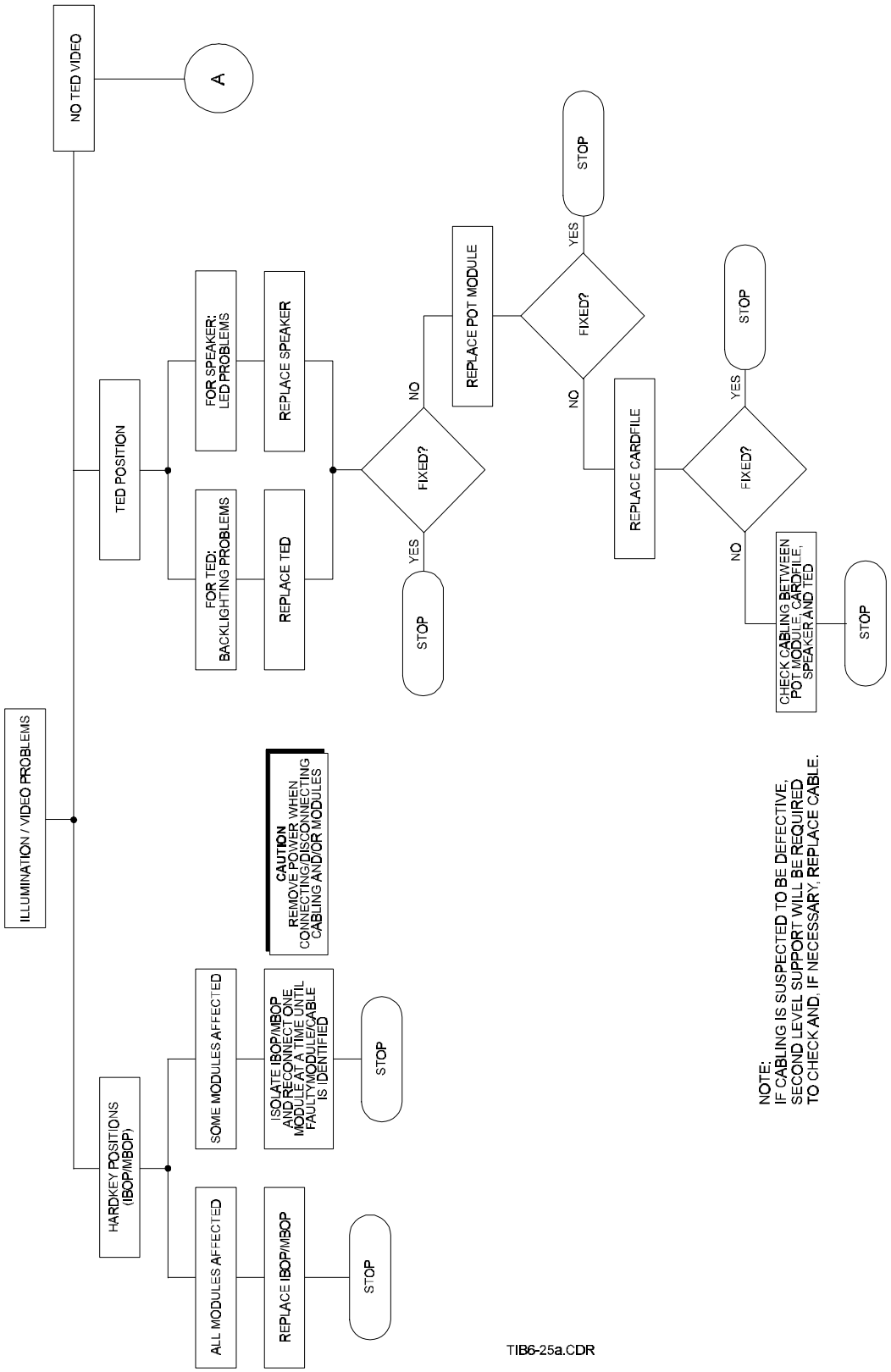


*Figure 6-25 (Sheet 1 of 2). User Reported Faults: Illumination/Video Problems*

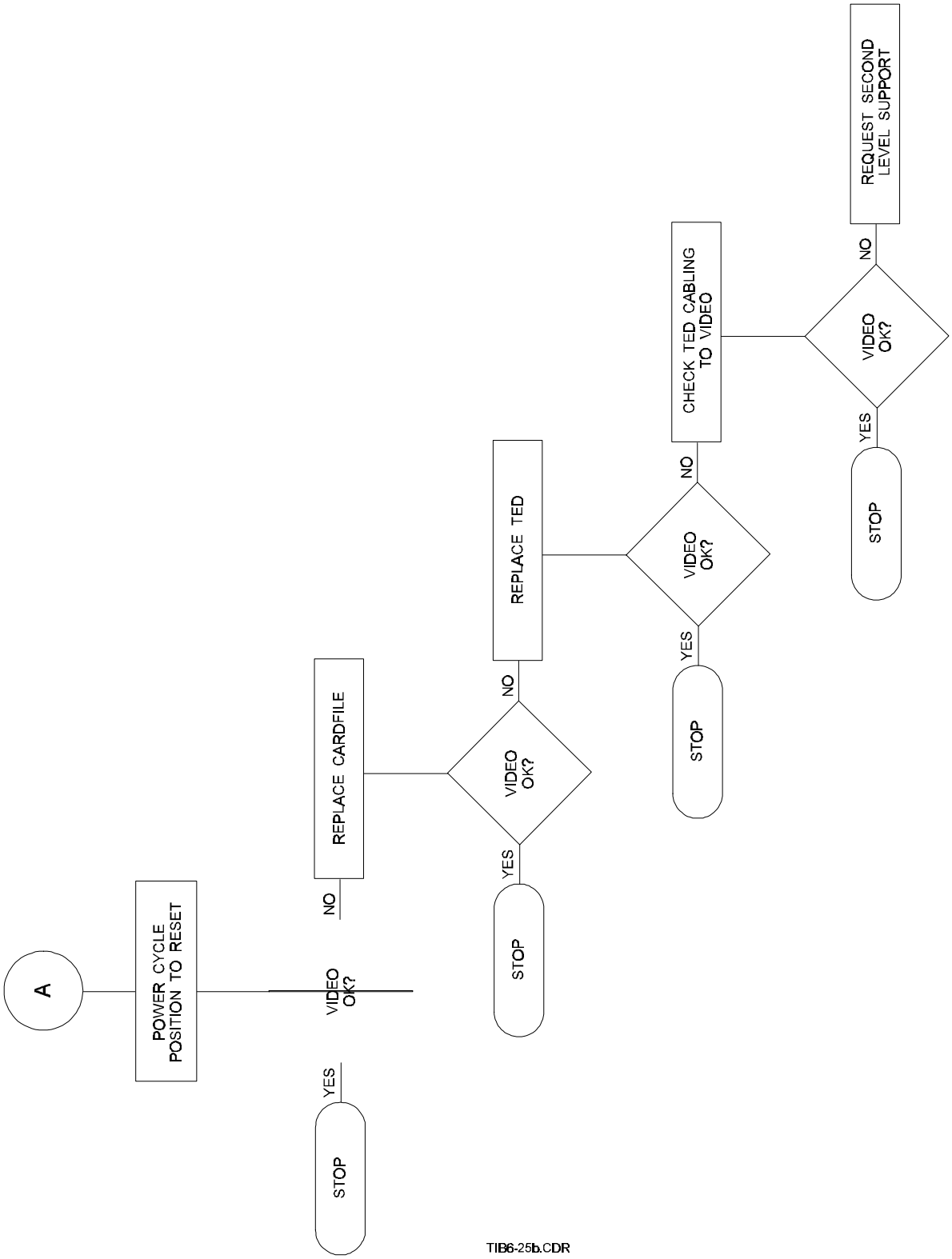


*Figure 6-25 (Sheet 2 of 2). User Reported Faults: Illumination/Video Problems*

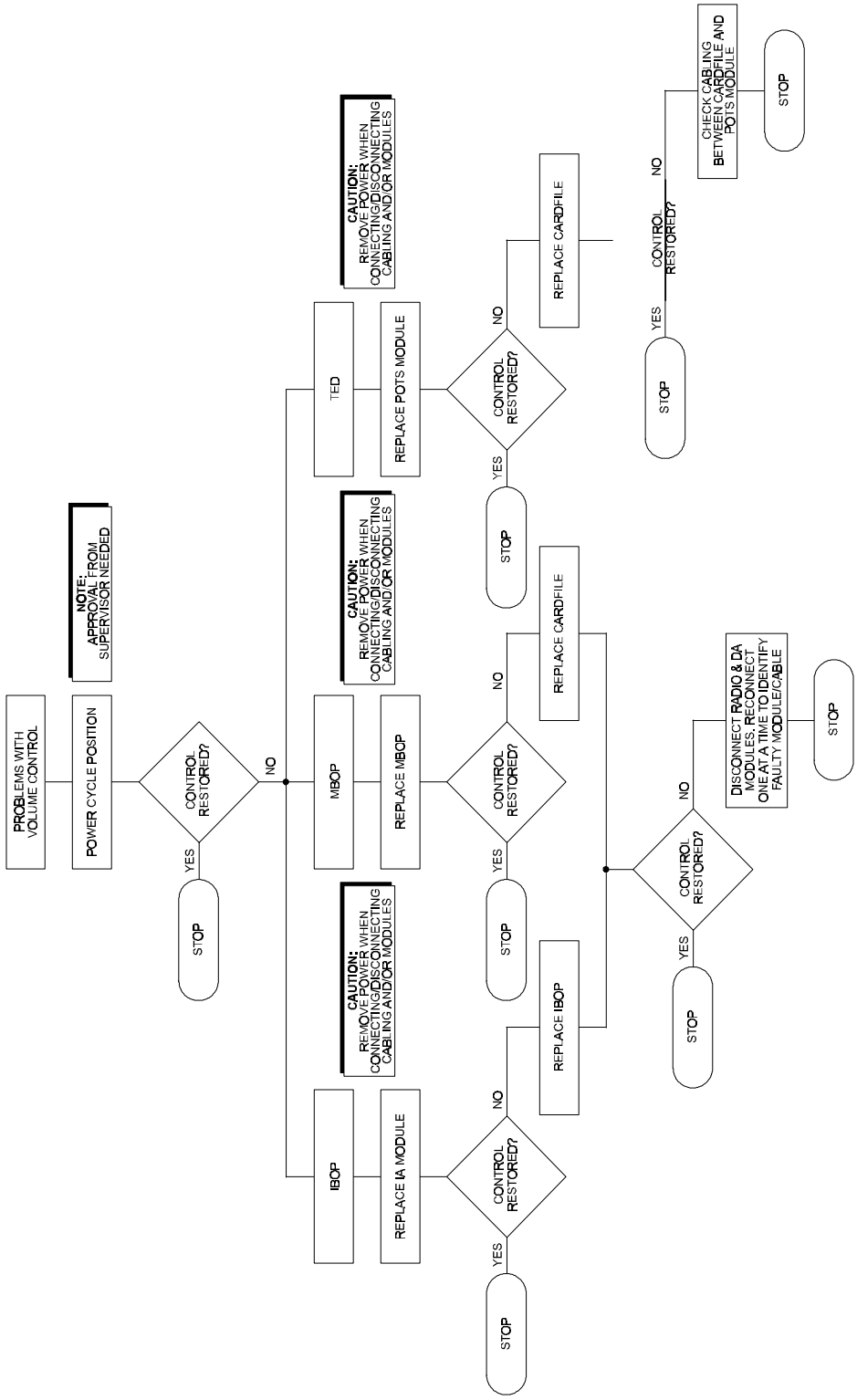


*Figure 6-26. User Reported Faults: Problems With Volume Control*

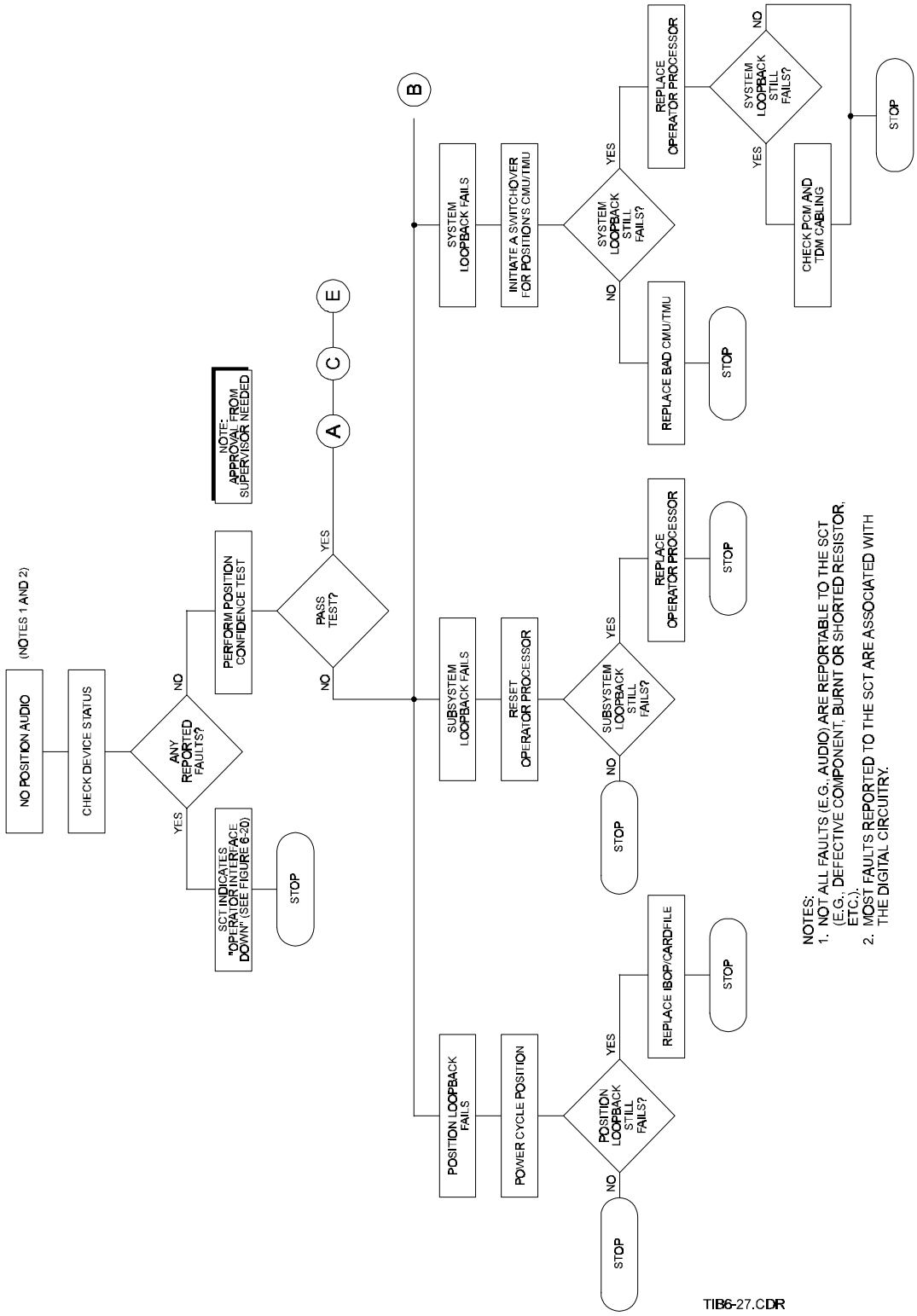


***Figure 6-27 (Sheet 1 of 4). User Reported Faults: No Position Audio***

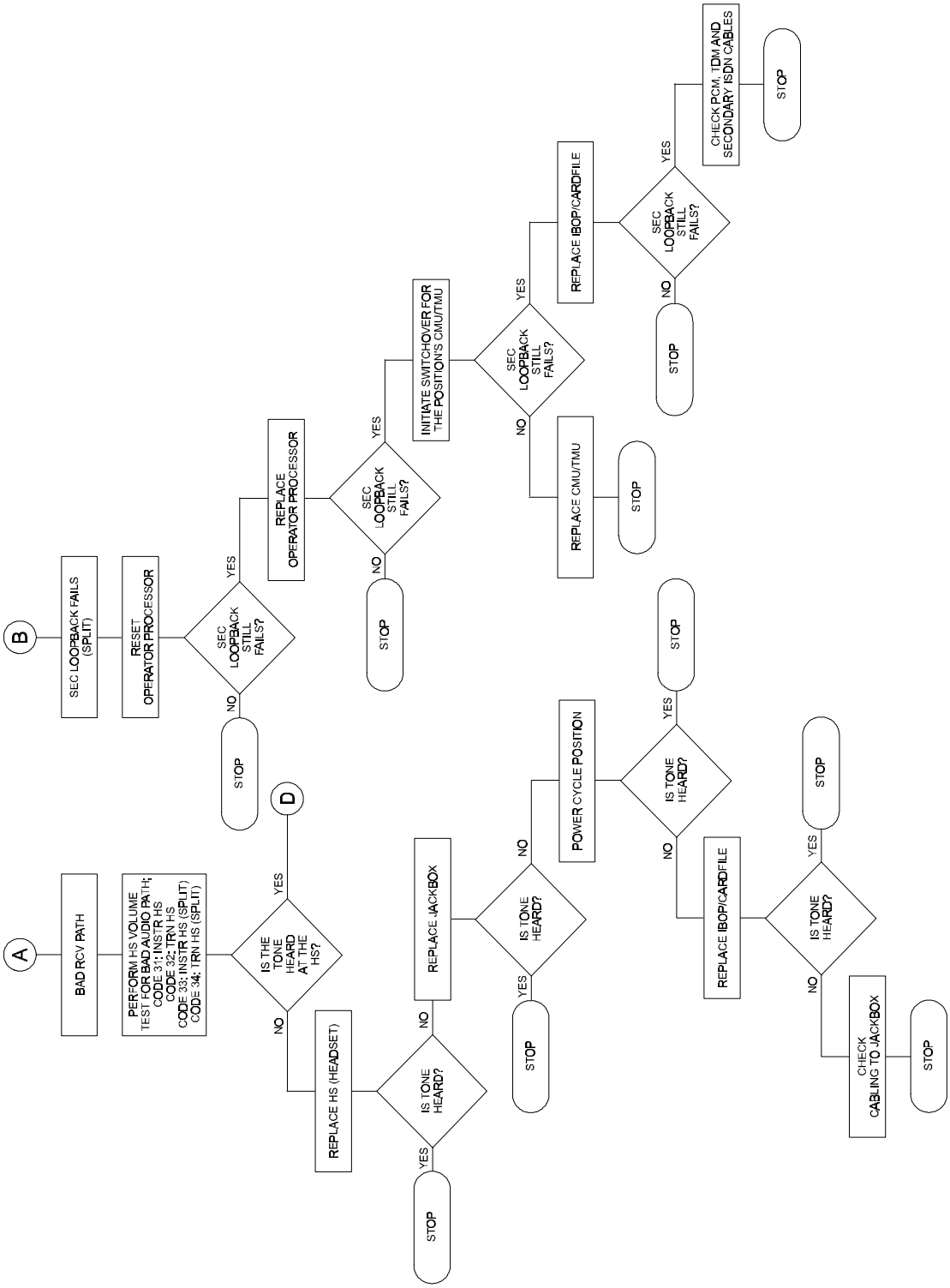


*Figure 6-27 (Sheet 2 of 4). User Reported Faults: No Position Audio*

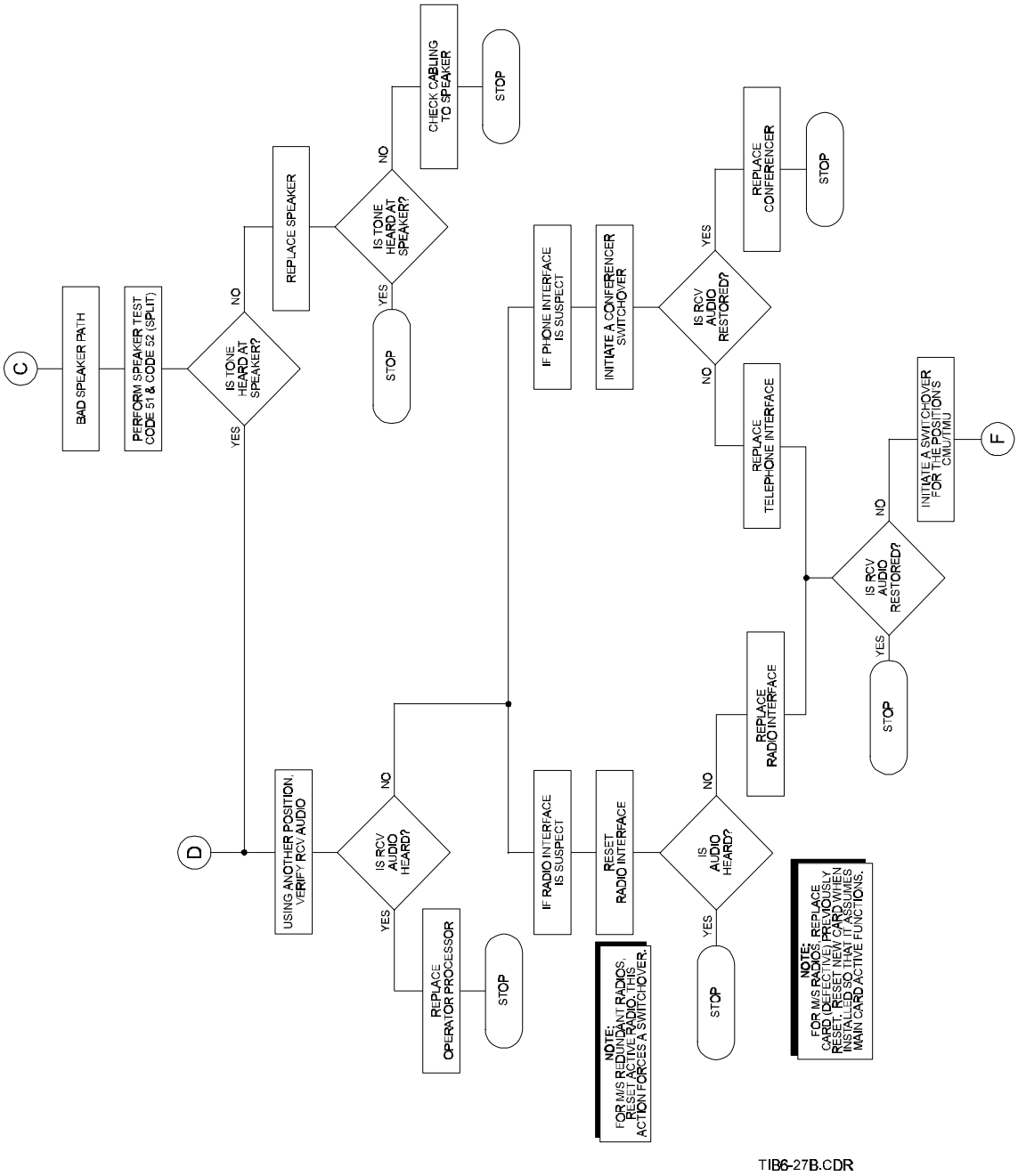


*Figure 6-27 (Sheet 3 of 4). User Reported Faults: No Position Audio*

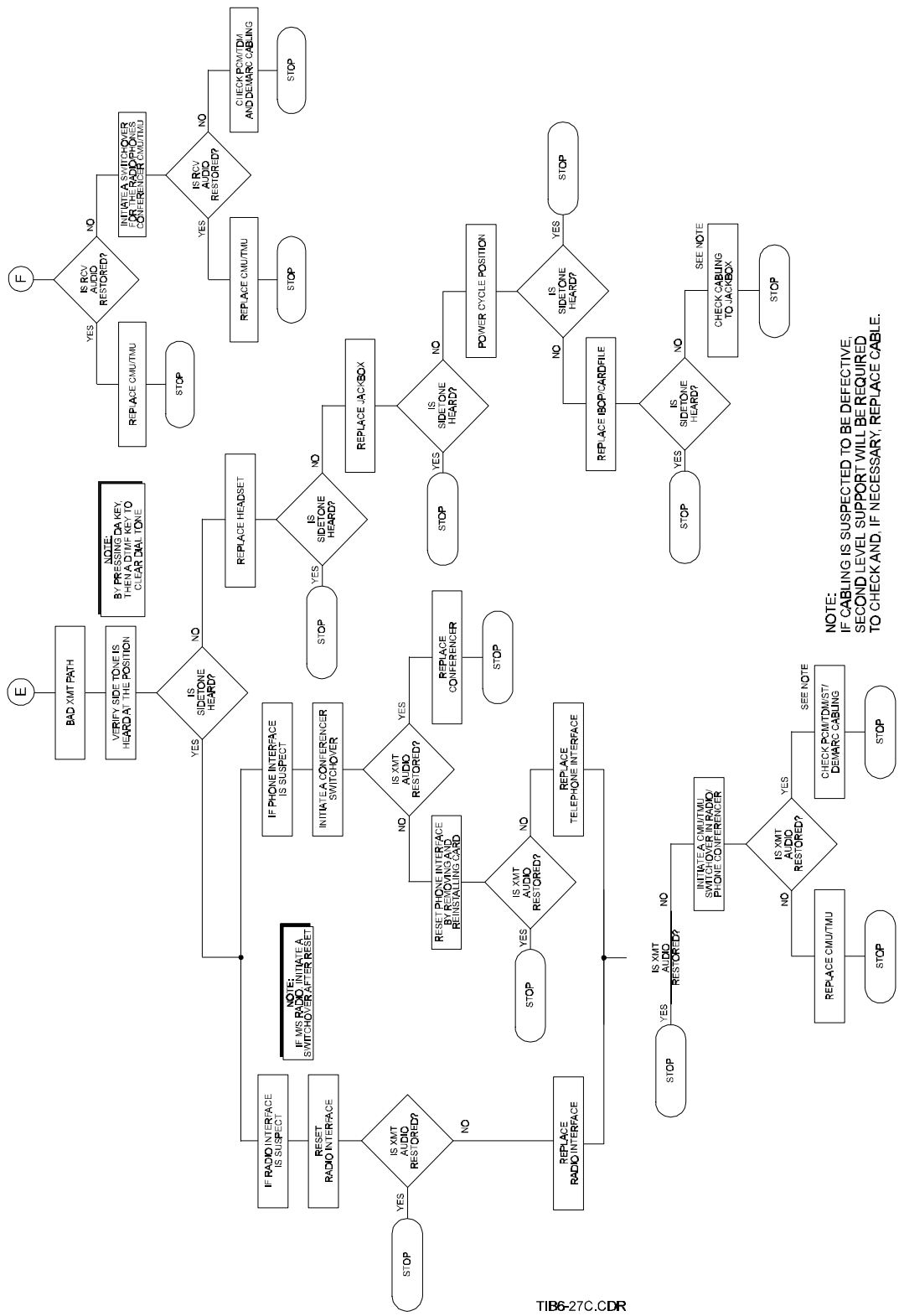


*Figure 6-27 (Sheet 4 of 4). User Reported Faults: No Position Audio*

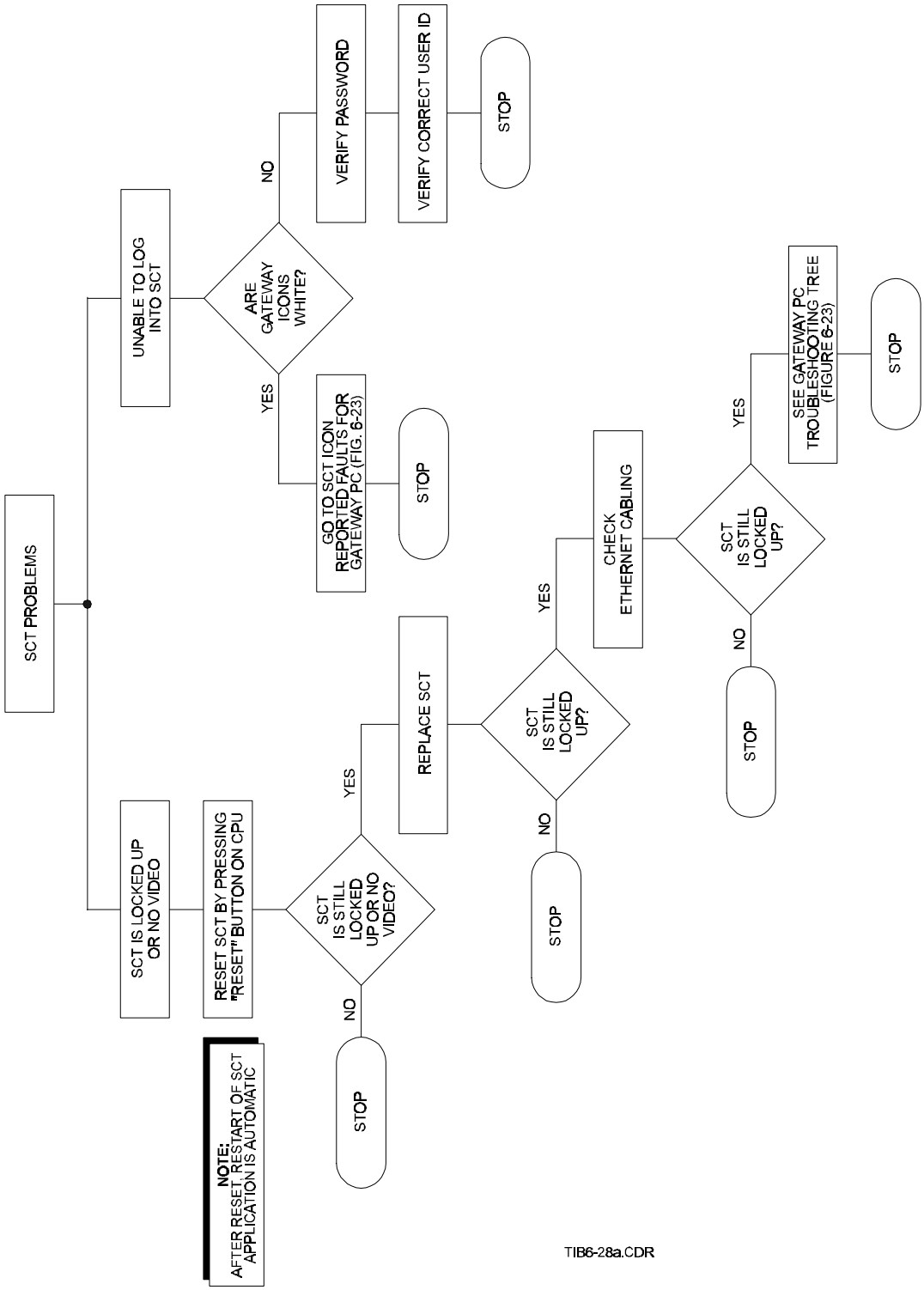


*Figure 6-28. User Reported Faults: SCT Problems*

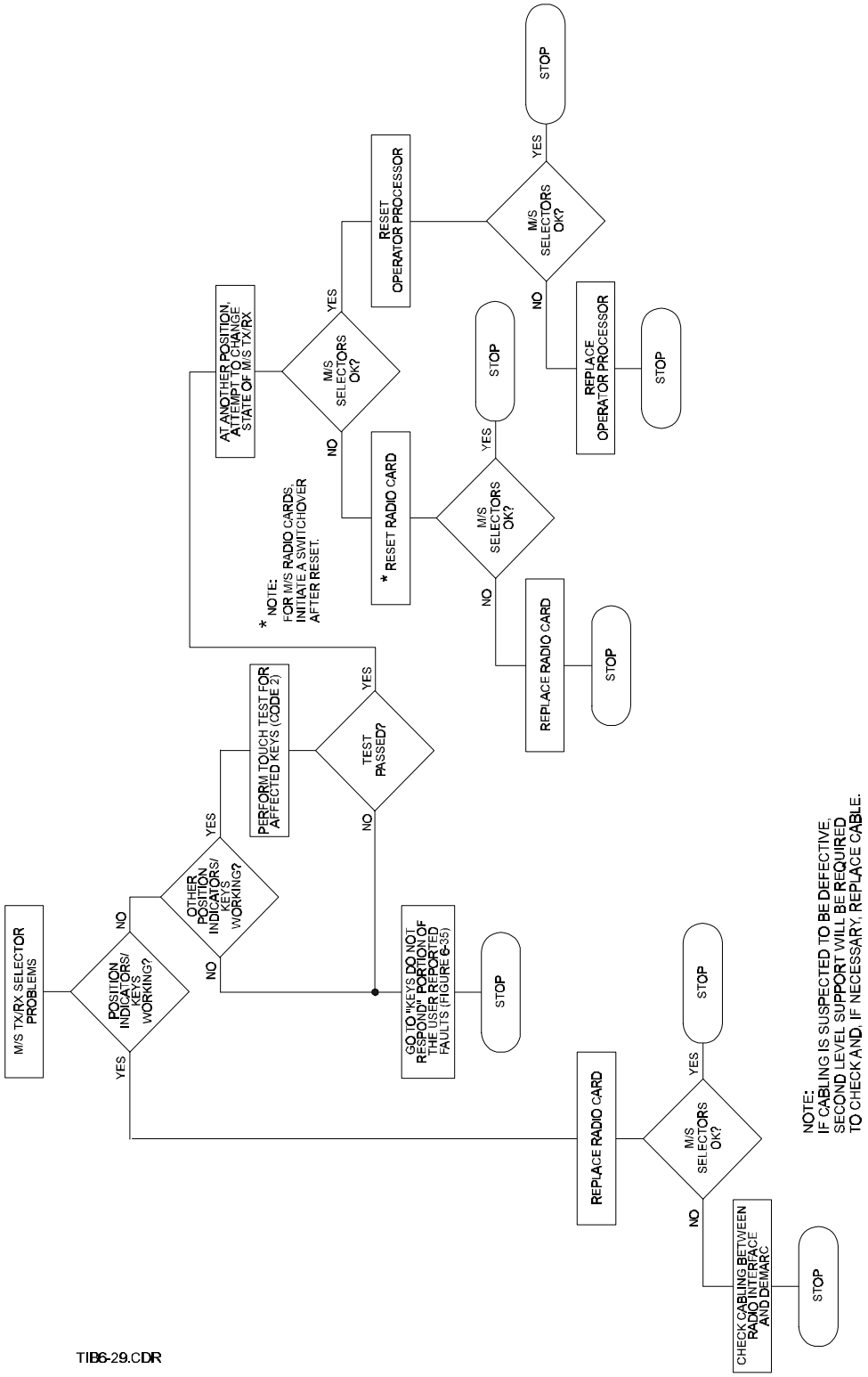


*Figure 6-29. User Reported Faults: M/S TX/RX Selector Problems*

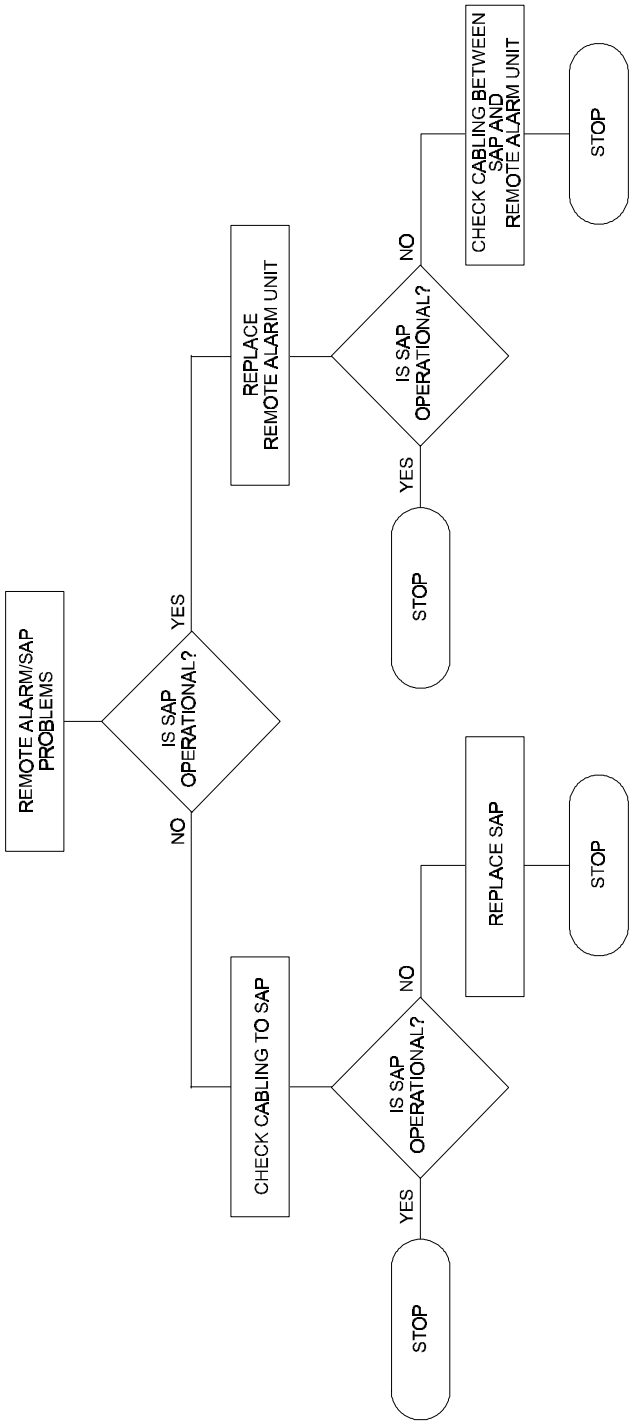


*Figure 6-30. User Reported Faults: Remote Alarm/SAP Problems*

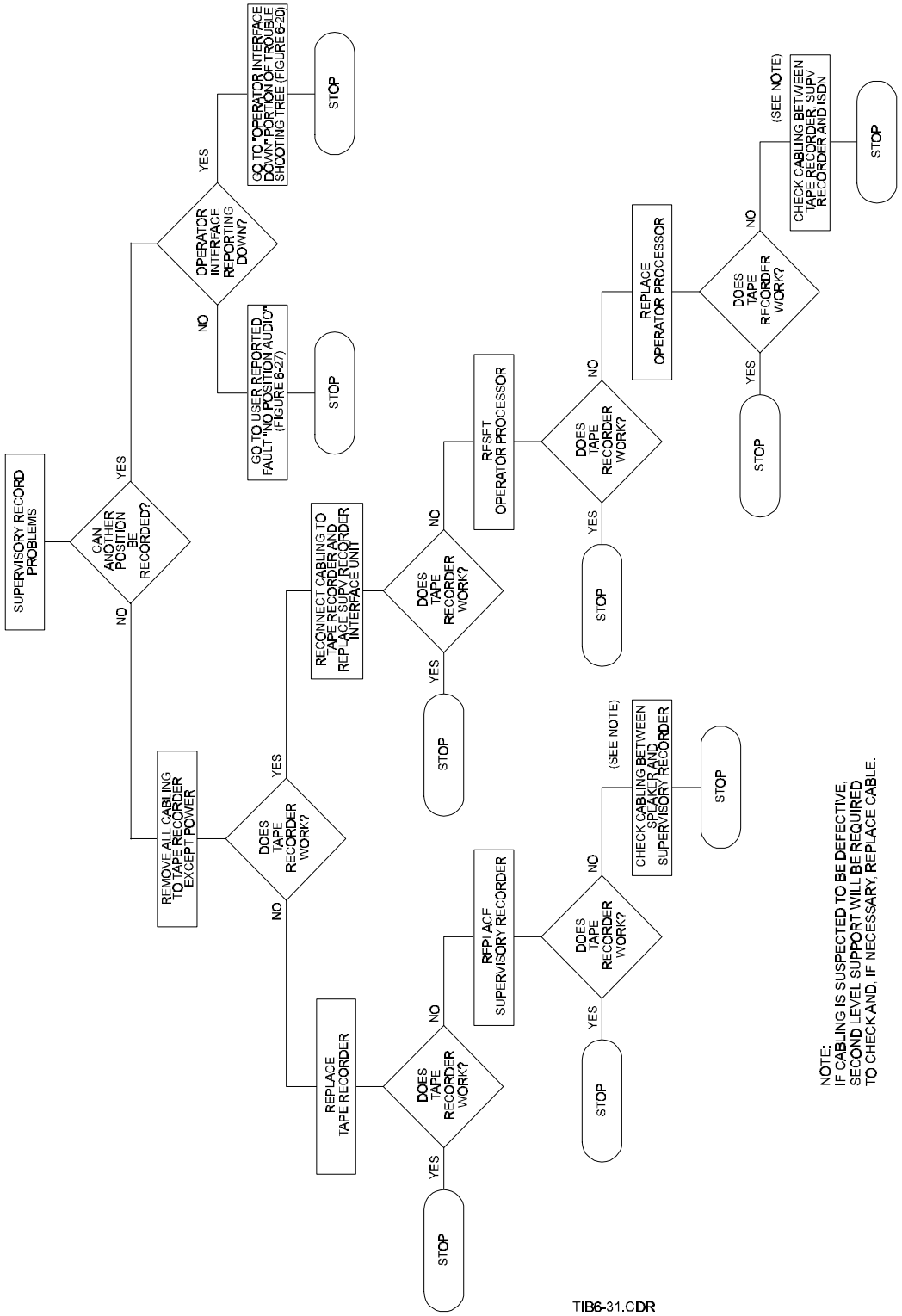


***Figure 6-31. User Reported Faults: Supervisory Record Problems***

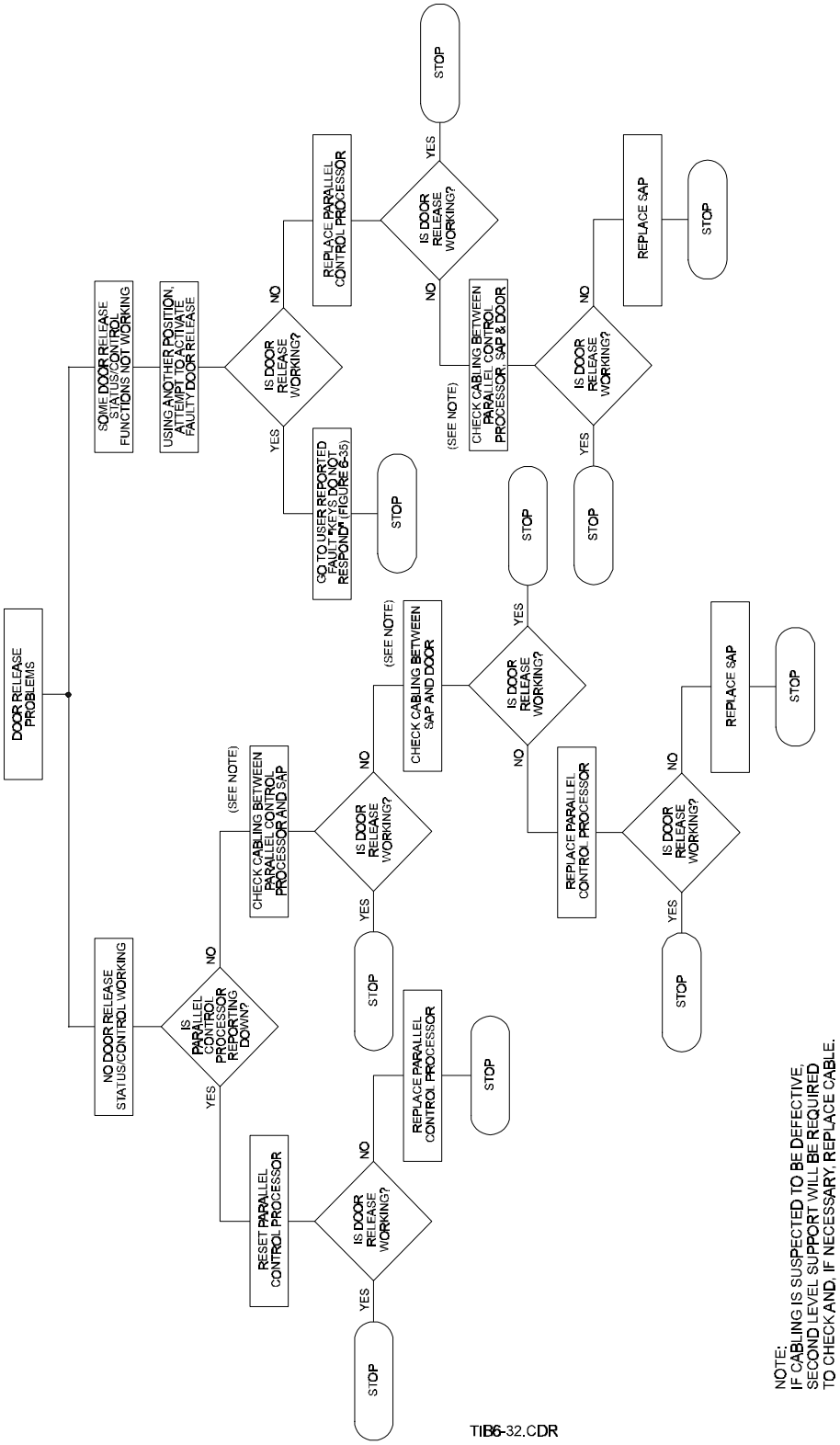


*Figure 6-32. User Reported Faults: Door Release Problems*

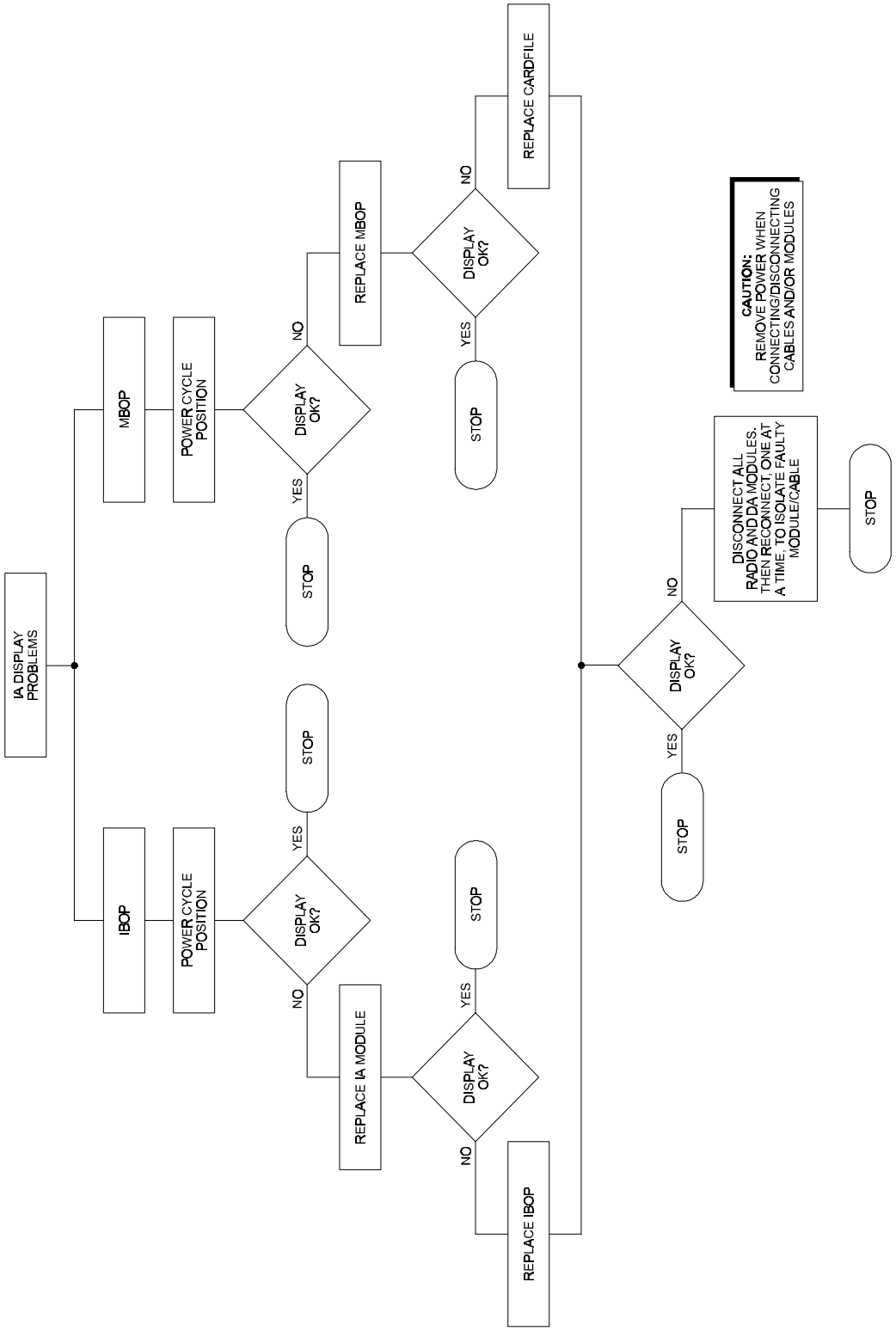


*Figure 6-33. User Reported Faults: IA Display Problems*

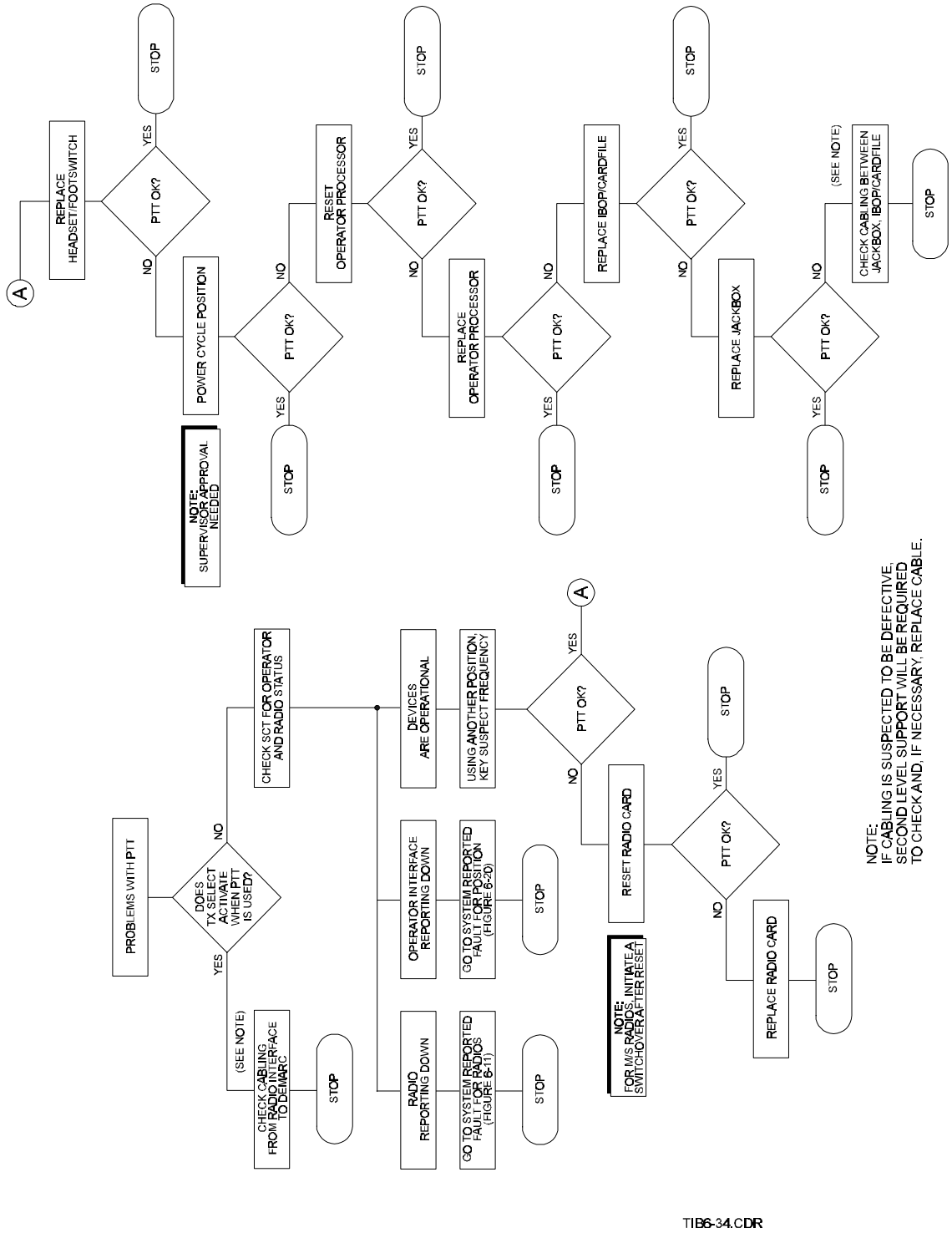


*Figure 6-34. User Reported Faults: Problems With PTT*

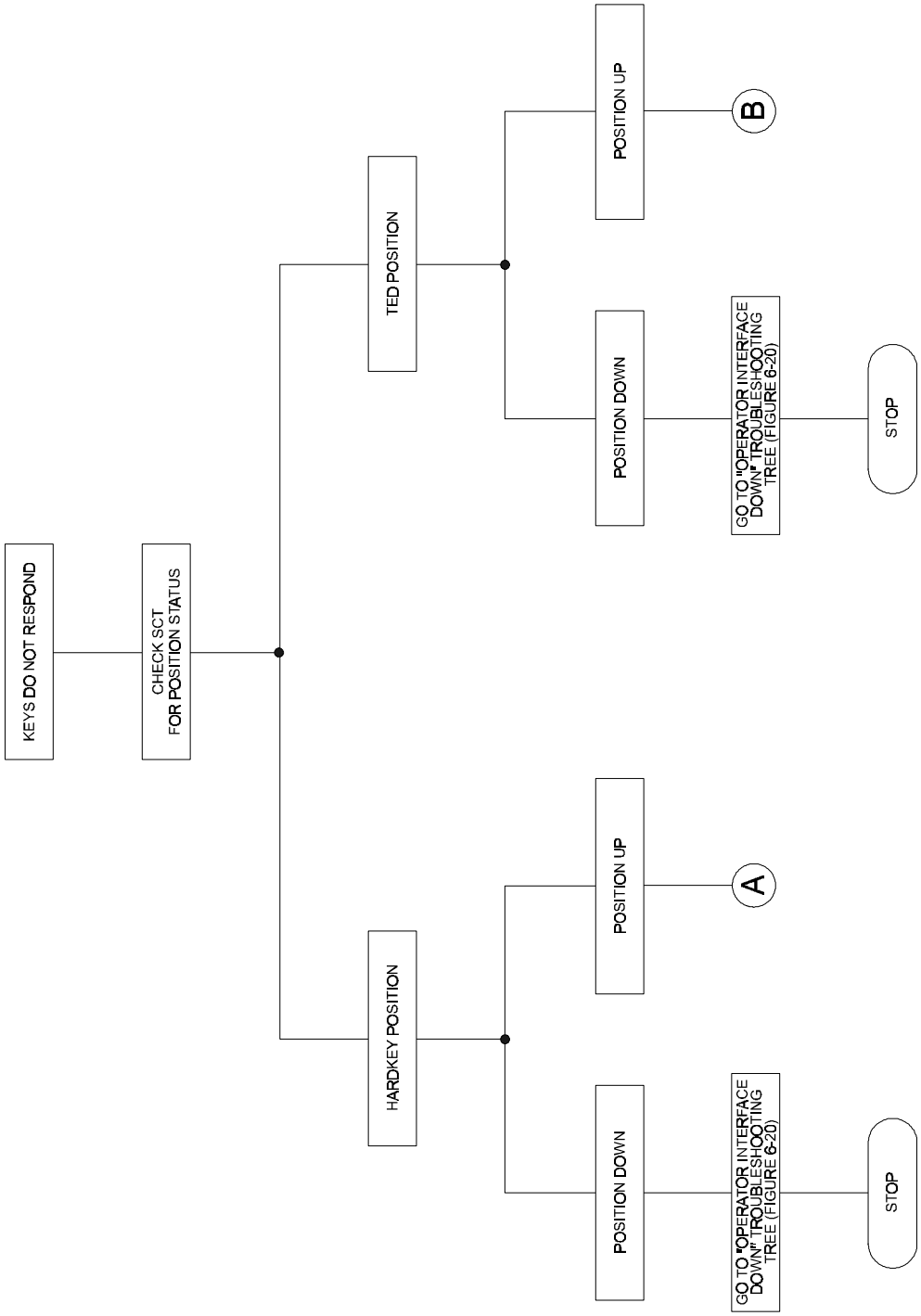


***Figure 6-35 (Sheet 1 of 3). User Reported Faults: Keys Do Not Respond (Hardkey/TED Positions)***

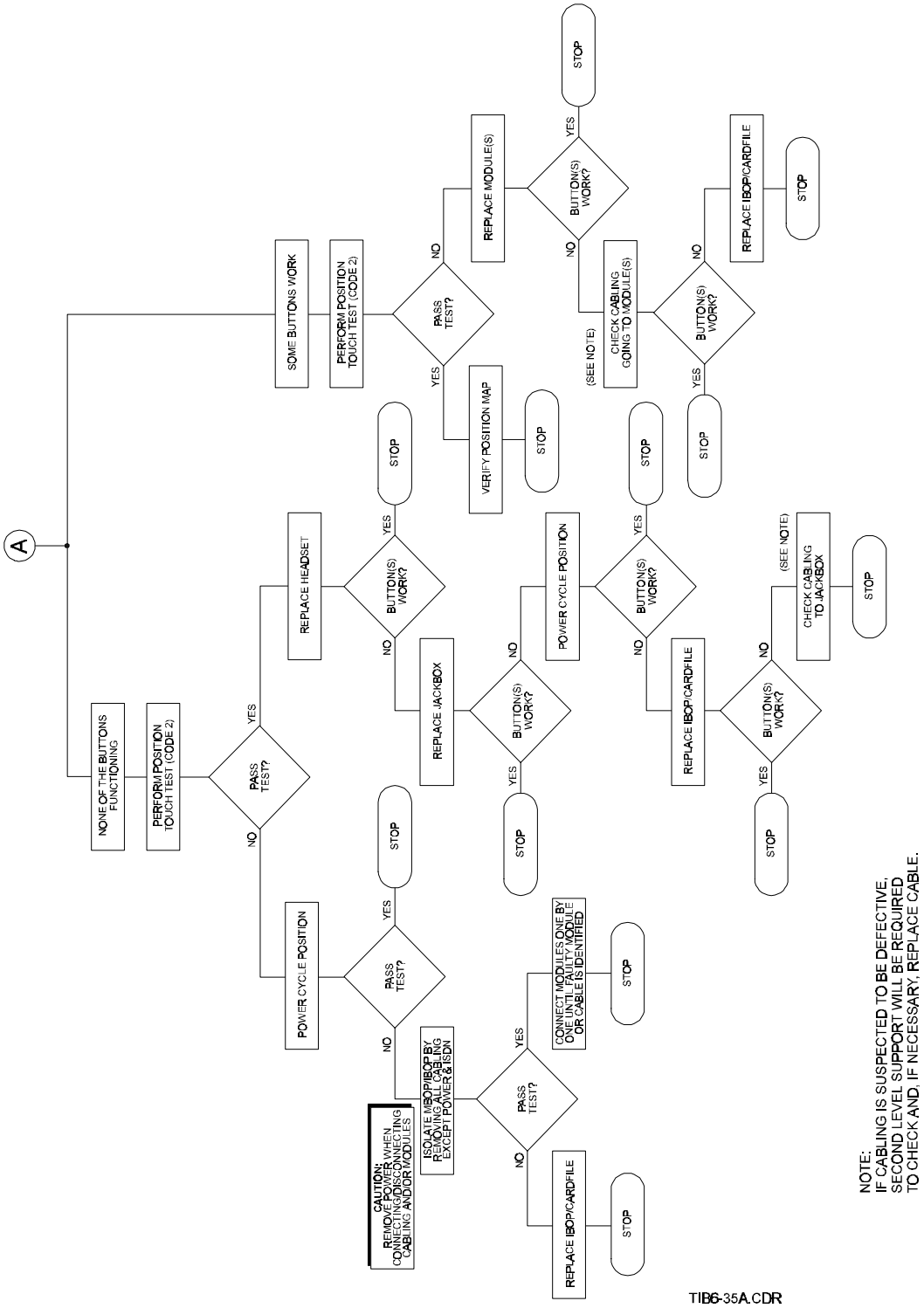


***Figure 6-35 (Sheet 2 of 3). User Reported Faults: Keys Do Not Respond (Hardkey/TED Positions)***

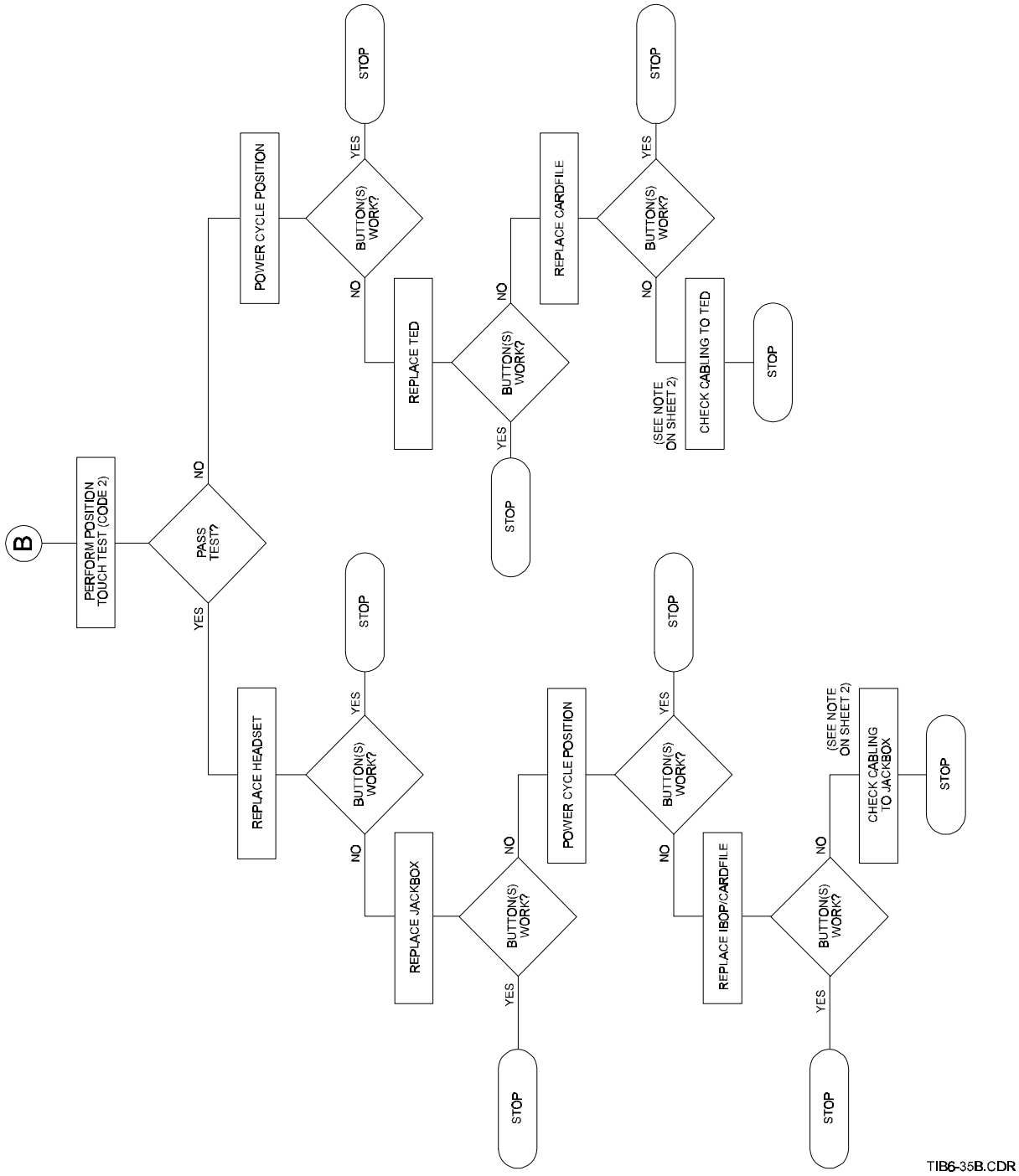


***Figure 6-35 (Sheet 3 of 3). User Reported Faults: Keys Do Not Respond (Hardkey/TED Positions)***

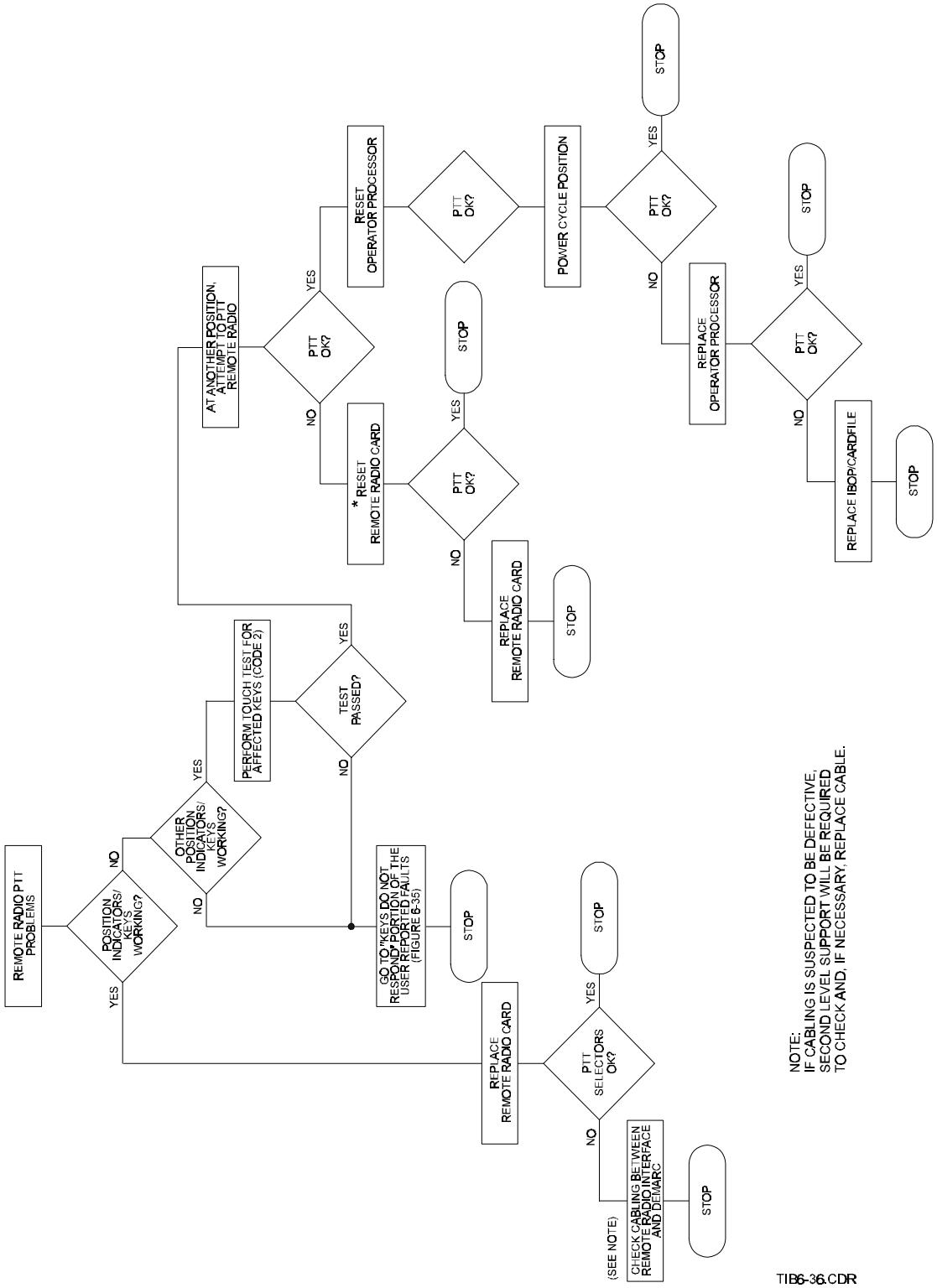


*Figure 6-36. User Reported Faults: Remote Radio PTT Problems*

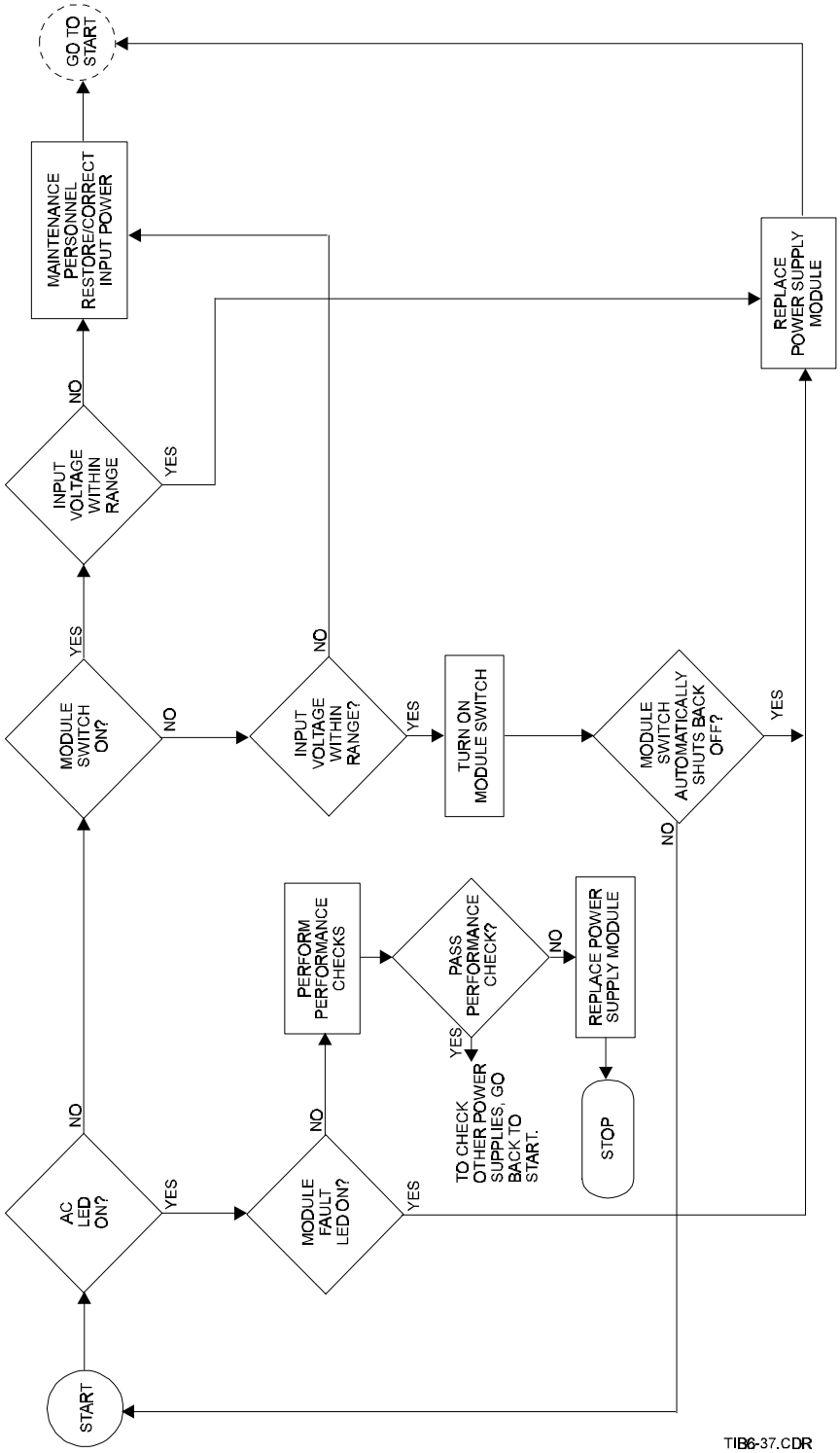


*Figure 6-37. User Reported Faults: Power Supply Operation Out of Tolerance*

### 6.4.9 Telephone Line Surge Protectors

#### 6.4.9.1 Tracing Telephone Circuits to Surge Protectors

The telephone interfaces, of which there are five types, connect through lightning protection cards (also called surge protectors) to customer furnished demarcation panels. Telephone circuits are different from radio and operator circuits in that there are no telephone distribution panels located inside the ETVS racks. The lightning protection cards act as the telephone circuit distribution points inside the ETVS rack. Locating the corresponding surge protector for any given telephone circuit is as described in the following paragraphs.

The first step in tracing the telephone connection is to determine the location of the telephone interface in the ETVS rack. Telephone interfaces are always located in the telephone card cages. The ETVS supports different numbers of telephone circuits depending on the basic configuration of the system. Telephone card cages can be differentiated from radio or operator card cages by their size. The 4U telephone card cages are four rack units high, whereas all other card cages in the system are five rack units high (i.e., 5U). Each card cage holds up to fifteen circuit cards and up to one ring generator. There are sixteen slots in a telephone card cage and seventeen slots in all other card cages. The technician can locate the card cage for the interface in question by referring to site card map information or by viewing the physical configuration screen in the SCT.

Either one or three surge protectors protect each card cage depending on the types of telephone interfaces installed. Card cages protected by one surge arrestor are called “Type A” card cages, while those protected with three surge protector cards are called “Type B” card cages. Type A card cages hold up to fifteen telephone interfaces; the first five can be 2-wire only, while the remaining ten can be 2-wire or 4-wire interfaces. No 6-wire or 8-wire interfaces are allowed in a Type A card cage. Type B card cages hold up to fifteen telephone interfaces of any number of wires each. The top-level system diagram (100924-xxx – found in the site’s E02a) will show the type of each card cage in the system in a small table located after the notes on the first page.

In the site-specific EO2a document, the technician can refer to the ETVS wiring diagram for specific wiring information. The last sheet of this diagram shows the connections for Type A and Type B card cages. After locating the telephone interface slot above, determine the type of card cage by referring to the first page of the system top-level drawing. For a Type A card cage, the cable connection from J24 of the card cage is traced to the appropriate surge protector. This surge protector handles all fifteen circuits in the card cage. For Type B card cages, the cables are traced from J25, J26 or J27 to the appropriate surge protector. J25 will contain the circuits for slots 1 through 6; J26 for slots 7 through 12; and, J27 for slots 13 through 15. The technician

should coordinate the removal of the surge protector (see paragraph 6.5.13 ) with the facility's management because unplugging the surge protector will interrupt all telephone circuits on that card.

#### 6.4.9.2 Checking Condition of Telephone Line Surge Protectors

A Fluke Model 77 or equivalent digital VOM is used to make this check. To check the condition of these cards following electrical storm-induced power failures/lightning-induced surges and to replace, if necessary, damaged or defective devices, proceed as follows:

NOTE

This check to determine the condition of the surge protectors must be cleared with the Supervisor before proceeding.

NOTE

This procedure limited to surge protector fuses only; shunt circuits will not be damaged; are designed to perform the shunting function and, therefore, do not require checking.

1. Perform steps 1 through 8 of the removal/replacement procedure in paragraph 6.5.13.
2. Connect a Fluke 77 digital VOM (or equivalent) across each fuse. If a fuse has opened, no resistance reading will be obtained on the VOM. If the fuse is still good, a small resistance value reading (of less than 1 ohm) will be obtained on the VOM.
3. To complete this procedure, perform steps 10 and 11 of paragraph 6.5.13.

## 6.5 CORRECTIVE MAINTENANCE

### 6.5.1 Recommended Maintenance Philosophy

This paragraph presents general recommendations concerning the maintenance philosophy to be employed in the maintenance and replacement of system LRUs. The LRU corrective maintenance concept, as applied to the ETVS, consists of the removal and replacement of defective items in the system and alignment/adjustment of those items requiring such action. Except for fuses, the replacement of components will not be done below the LRU level. Physical removal of components shall be held to the

absolute minimum necessary to assure acceptable system performance. Corrective maintenance is limited to the replacement of a site replaceable part (LRU), and to alignment/adjustment after the physical replacement of the item.

Replacement cards should be carefully checked to ensure that all board plug-in components (e.g., PALs, EPROMs/EEPROMs, jumpers, etc.) are firmly seated in their respective sockets.

Certain system units are configured (strapped) to meet the particular requirements of the systems/circuits in which they are used; in these instances, the replacement unit must be identically configured using jumpers for the strapping. Strapping is accomplished via jumpers, switch settings, etc. Push on – pull off minijumpers are used for strapping. Strapping is initially done at the manufacturer's facility prior to system installation.

It is recommended that the strapping on the new circuit cards at the site be physically matched to that on the defective circuit cards. Changing the strapping configuration may make the unit inoperable. In addition, in the case of the TMUs/CMUs, certain jumper/strapping settings are factory pre-set and should not be changed at the site unless authorized or done by a DENRO representative. For physical locations of card jumper/strapping configurations, see Appendix A; for ETVS default and site-specific jumper settings, see Section 5 and the alignment procedures in paragraph 6.6.5. Some of the procedures in paragraph 6.6.5 list both ETVS default and site-specific settings of concern to the technician.

CAUTION

Replace cards only with cards of the same type and with the same settings. Duplicate the replaced card’s settings on the replacement card if necessary. Telephone cards installed with incorrect strapping for the type of phone line may not function.

This section provides replacement procedures for system equipment. In some instances, the procedures are for items requiring adjustments (i.e., alignments and/or strapping settings). These procedures are provided in Section 6.6.5. In many cases, the alignments are performed from the front panel of the unit without the physical removal of the CCA; however, in a few instances, the use of an extender card is required.

For CCA kits, it is recommended that firmware parts/revision numbers on the replacement CCAs be carefully checked on-site against those on the CCAs being removed from the system. Any mismatch problems must be resolved before the installation of new card, which may also require an alignment, if applicable to the specific CCA (see paragraph 6.6.5).

Alignment/adjustment of the affected modules should be conducted as part of on-site installation and checkout and when these modules are replaced in the system. The alignment procedures depend on the transmit and receive levels which are site specific. Detailed alignment and strapping procedures for the system are provided in Section 6.6.5. The CCAs for which strapping procedures are provided do not require alignment. Section 7 of this Technical Instruction Book lists the system's LRUs. The ETVS will be delivered to the installation site with the software already installed and tested. In addition, specialized hardware is provided to enable the software to operate on the system (e.g., items such as Ethernet network interface cards, FIFO cards, and associated Ethernet cabling). The software to be installed prior to equipment delivery includes Windows 3.11 for Work Groups on local CPUs (i.e., SCTs, MCTs, and central rack-mounted Gateway Computers), PC software (using a distribution gateway installation program at the manufacturer’s facility), and Windows 95 for remote equipment. Windows NT is installed on remote CPUs (servers) that are connected to Remote Configuration Terminals (RCT) via modem interfaces.

After installation of the equipment at the customer’s site, the equipment and software will be tested for proper operation. Tests will include:  continuity checks (demarc cable and position data cable continuity checks), initial power-up and power tests, position equipment power-up and initial testing, SCT/MCT power-up and initial testing, and system checkout (including performance tests). Equipment alignment for selected cards (i.e., radio and telephone interfaces) are done in accordance with the procedures contained in paragraph 6.6.

### 6.5.2 Replacing Fuses

For protection of the equipment, fuse circuits are used throughout the system. A blown fuse will trigger an alarm. Replace the unit rather than replacing the fuse on board. (The fuses on the system boards are not LRUs).The unit can then be sent to the appropriate repair/maintenance facility for fuse replacement and, if necessary, troubleshooting and repair.

Fuses are provided in the central rack position fuse panel. The number of central and remote rack position fuse panels varies according to the number of operator positions in the system and thus is a function of system size. A label strip, mounted directly above the fuses, is provided for identification of the position or unit served by each fuse.

A 1-amp fuse is provided on the front panel of each low-voltage disconnect (LVD) panel to protect the voltage sense circuit.

**Table 6-37** provides a listing of fuses that can be replaced in the system.

#### 6.5.2.1 Replacement Fuses

If a fuse blows on a CCA, replace the card using standard removal/replacement procedures contained in paragraph 6.5.3. If fuse on replacement unit blows, Second Level Support is required. **Table 6-37** provides a list of ETVS replacement fuses.

***Table 6-37. List of Replacement Fuses***

| UNIT | FUSE |
|---|---|
| Position Fuses (installed in Position Fuse Panel ) (see NOTE) | 5A @250V (F02A250V5A) FB (Qty: 16) |
| Low-Voltage Disconnect Unit/Delayed Start Load Disconnect Unit (on front panel) | F1: 1A SB (250V 313) (Bussman #AGC-1 or equivalent) |

NOTE: Position Fuse Panel rated at 5 amps; however, depending on equipment/position fused, installed fuses may have a lower rating as indicated on label strip located directly above the fuses and adjacent blown fuse indicator LEDs. Positions served by fuses on a particular fuse panel are listed in label strip, together with the fuse ratings for each position, unit, and panel listed.

### 6.5.3 Central Rack Card Assembly Replacements

NOTE

A RESET pushbutton is located on the front panel of a number of the Central Rack CCAs. To ensure full operation of the system, these switches may be used after the replacement of individual CCAs to reboot the on-board processor. Normally, it is not necessary to RESET the CCAs after a system shutdown or after a power failure.

CAUTION

Make sure that proper ESD procedures/ precautions are being followed.

CAUTION

During active on-line operations, inadvertent pressing of the RESET pushbuttons must be avoided. Pressing the RESET button while a card is operating on-line will disrupt the communications (telephone or radio) being processed or interfaced by that card.

NOTE

Any CCA (e.g., telephone interfaces, ring generator) not having a front panel RESET pushbutton must be “quickly” and firmly seated or the associated position may not come up.

To remove and replace a card (LRU) in one of the central rack card cages, perform the following procedure:

**NOTE:** This listing of LRUs identifies those cards having the RESET feature and those that do not with a “YES” or “NO” in the ‘Front Panel RESET’ column. The “Power-up” procedure of paragraph 6.4.1.2 provides instructions for using the reset feature in a methodical and sequential fashion during a system power-up following a shutdown for maintenance work or due to a power failure.

**NOTE:** The following cards can be removed and replaced using this procedure:

| Part Number | Card | Front Panel RESET |
|---|---|---|
| 120975-001 | CCA, Maintenance Access Unit # | No |
| 120932-001 | CCA, Ring Generator Card * | No |
| 325663-001 | Kit, CCA, Parallel I/O (Parallel Control Processor), w/Firmware ** | Yes |
| 325671-005 | Kit, CCA, Gateway Interface w/Firmware ** | Yes |
| 325674-005 | Kit, CCA, Alarm Processor ** | Yes |
| 325964-001 | Kit, CCA, High-Speed Data Link ** | Yes |
| 325928-001 | Kit, CCA, 2-Wire PBX Line Interface ## | No |
| 325944-001 | Kit, CCA, 4-Wire PBX Line Interface ## | No |
| 325929-001 | Kit, CCA, SS-1/SS-4 Line Interface ## | No |
| 325930-001 | Kit, CCA, ASU Line Interface ## | No |
| 325931-001 | Kit, CCA, E&M Line Interface ## | No |
| 325935-001 | Kit, CCA, Telephone Conferencer ** | Yes |
| 325936-001 | Kit, CCA, Radio Main/Standby Interface ## | Yes |
| 325937-001 | Kit, CCA, Remote Interlocking (Radio) ## | Yes |
| 325937-002 | Kit, CCA, Remote Interlocked (Radio) ## | Yes |
| 325996-003 | Kit, CCA, Operator Processor w/Differential, 25 MHz ** | Yes |
| 325996-004 | Kit, CCA, Operator Processor, Split w/Differential, 25 MHz ** | Yes |
| 325938-006 | Kit, CCA, Operator, SPT w/Differential, 25 MHz. Supervisor Record ** | Yes |
| 325960-001 | Kit, CCA, Timer Multiplexer Unit † | See steps below |
| 325962-001 | Kit, CCA, Cluster Multiplexer Unit † | See steps below |

* Requires no strapping/jumpers or alignment
** Requires no alignment
\# Strapping procedure only
## Requires alignment
† Requires strapping procedure; also see unique TMU/CMU installation/removal guidance in the following notes that involve a front panel strap and the RESET pushbutton of the units

1. Verify with the supervisor that the necessary system configuration changes have been made to enable the unit to be removed from the card cage without interrupting communications.

CAUTION

Do not remove both TMUs or both CMUs at the same time under any circumstances. Complete system failure will result if both TMUs are removed.

Unless TMU or CMU is to be removed, do not loosen screw securing the front panel strap of that unit.

2. Have an operational replacement unit available to reinstall in place of the card to be removed. Refer to Section 5 for the unit strapping data (settings) and to Appendix A for physical locations of jumpers/strapping. For site-specific settings, refer to radio and telephone settings in the alignment procedures in paragraph 6.6.5. If a unit or CCA requires alignment, perform this corrective maintenance procedure in accordance with the applicable subparagraph in paragraph 6.6.5.
3. For TMU/CMU only: Loosen, but do not remove, the thumbscrew securing front panel bracket until bracket is free of cardcage and RESET button is no longer depressed.
4. Pull the unit from the card cage using the front panel handle. It is not necessary to power down the rack.
5. Before installing a new unit or CCA, check that the replacement unit has the correct firmware (if applicable) and strapping installed. The firmware and strapping should be the same as that of the replaced unit. If there is a mismatch, the issue must be investigated and resolved before replacement unit is installed. **Table 1-3** contains a listing of firmware reference designators and part numbers applicable to each CCA kit. **Table 1-3** also lists the CCA kits by name, 325XXX-XXX parts number, and assembly parts number (i.e., 120xxx-xxx). As stated in more detail in the Appendix A introduction section, **Table 1-3** correlates each “kit” number with the corresponding board assembly number shown on each CCA drawing in Appendix A, as applicable.

NOTE

Ensure that each plug-in unit is firmly secured in its correct position (card cage slot).

6. Slide the plug-in replacement unit into the card cage slot and push all the way in so that the card is secured in the edge connector.
7. For TMU/CMU only: Tighten the thumbscrew located at the bottom of the front panel until it is fully seated into the card cage and the RESET button is fully depressed and bracket is secured.
8. If necessary/applicable, press the front panel RESET button, if installed on the front panel, to force a reboot of the unit's processor.

NOTE

If resetting phone conferencer pair drops voice line, reset affected phone interface card by pulling it out, then reinserting. Phone conferencers should only be reset if: (1) TMUs had to be reset, (2) the conferencers are reporting down, or (3) the majority of phone interfaces are reporting down. Resetting the conference card reboots the on-board processor; this action, if done while a particular channel line is active, communications will be cut off. Finally, note that premature setting of the phone conferencer will create a maintenance-induced failure.

### 6.5.4 Replacing a Position LRU

Paragraph 6.6.1.1 covers position equipment adjustments; paragraph 3.3.2 provides a confidence test (performance check) to verify correct operation of the position equipment following removal/replacement of TED and Mini-BOP equipment or card files. No alignment procedures are required for the positions; however, there are $I^2C$ address switches that must be set on the replacement units to match that of the unit or module being replaced. For these address numbers, refer to either **Table 2-2** or **Table 6-41**. In case of a problem or mix-up in $I^2C$ addresses, first check address currently set in hex switch on card being replaced, then check with the manufacturer (DENRO).

Should backlighting level become unacceptable after system becomes operational at a particular site, contact Second Level Support for any readjustments of backlighting to be made. These are critical adjustments and should only be done by the Second Level Support activities. Otherwise, replace affected units per removal/replacement procedures of Section 6.

The following procedure provides steps for removing a position LRU that is suspected of being defective and replacing it with an LRU that is known to be good. With the exception of the card files, these LRUs are mounted in operator console cutouts.

WARNING

Identify and tag all associated position equipment as OUT OF SERVICE so that no attempt shall be made to operate these items.

The position equipment listed below is replaced as LRUs. To replace position equipment, verify with the Supervisor that a position can be taken off-line and that the system reconfiguration necessary has been completed.

NOTE

Position equipment replaceable as LRUs include the following:

- Radio Selector
- Speaker Module
- IBOP
- MBOP
- IA Display Module
- Split IA Module
- DA Selector
  - 20-button DA IBOP
  - 35-button DA MBOP
- Programmable DA Module
- Card File (see paragraph 6.5.4.1 for removal/replacement of card files)
- POT Module
- TED
- Jackbox Module

IBOPs have no card files; therefore, removal of fuse at position fuse panel is required to remove power to positions having IBOPs. However, TEDs and MBOPs do have card files and power to these card files can be removed/turned on by pressing the ON/OFF power switch located on the front of each. (See **Figures 5-64** and **5-76**).

1. Verify with the supervisor that the position can be taken off-line.
2. Have a replacement position available.
3. Remove power to the defective position by removing the appropriate position fuse at the central rack equipment position fuse panel.

NOTE

A label strap above the panel fuses is used to identify the position served by each fuse.

4. Remove machine screws holding module or panel in place.
5. Pull assembly through console cutout with cables still connected.
6. Identify and tag all cables connected to the back of the unit being pulled. Disconnect cables. Disconnect any ground straps.

NOTE

The connectors at the position equipment are clearly labeled/identified. Cable connections used depend upon the equipment supplied at the position.

7. Set $I^2C$ address hex switch to same as unit being replaced (see **Table 2-2** or **6-41**).
8. Connect cables to the new unit; reinstall any ground straps.
9. Push assembly into the cutout and align with screw holes.
10. Secure assembly; insert and tighten machine screws.
11. Return power to equipment by installing the previously removed fuse.
12. Conduct performance check to ensure that position is operating properly; use confidence test procedures of paragraphs 3.3.1., 3.3.2, 3.3.2.1, and 3.3.2.2 (if TED) and 3.3.2.3 (if Hardkey Position).
13. When directed, place position back on-line.

### 6.5.4.1 Replacing Card Files in a TED/Mini-BOP

The TED/Mini-BOP (normal and split version) Position Card Files are installed inside the operator consoles where the position equipment modules are mounted. These units are shown in **Figures 5-64** and **5-76**, respectively. The TED position card file accommodates up to five cards; the Mini-BOP supports four boards. These boards plug into the backplane that distributes power to the boards themselves and interfaces with the $I^2C$ Distribution Board. Receptacles mounted on the rear panel of the card file provide connection, via cabling, to the central rack and position modules. The card file is an LRU and is replaced in its entirety; it should not be opened by site maintenance personnel since the CCAs mounted within the card file are not site replaceable.

**Figure 5-63** shows position cabling for the TED; **Figure 5-75** shows the position cabling for the Mini-BOP. Installation locations, mounting arrangements, and quantities of the card files are system configuration dependent and may vary from site-to-site and system-to-system.

Although the exact location of these card files do vary, they are generally mounted under and inside the operator position and thus are not readily accessible from the front of the console. To replace one of these units, it is necessary to coordinate this maintenance activity with ATC before proceeding with this procedure. The appropriate size Phillips screwdriver is the only tool needed.

1. Gain access to the unit from the rear of the console (a rear panel may have to be removed along with any screws securing the panel).
2. Turn off power to TED or MBOP by pressing power ON/OFF switch.
3. Remove the panel and screws securing it.
4. Using Phillips screwdriver, disconnect ground strap.
5. Remove screws securing the unit in place.
6. Pull unit out from console.
7. Identify and tag all cables connected to the unit.
8. Disconnect all cables.
9. Install new unit by: reconnecting all cables to card file rear panel; pushing unit back into place; securing the mounting screws; and connecting the ground strap.
10. Turn on power to TED or MBOP by pressing power ON/OFF switch
11. Replace rear panel and re-secure screws.

12. Run position confidence test in accordance with procedures in paragraphs 3.3.1, 3.3.2, 3.3.2.1, 3.3.2.2 (if TED), and 3.3.2.3 (if Hardkey Position).
13. If position passes confidence test, inform ATC that the position is ready to go back on-line.
14. Place position on-line.

### 6.5.5 Replacing the Power Supply Modules (Central Rack) (Versions 1 and 2)

NOTE

Modules can be removed for servicing or replacement without disconnecting or removing any cables.

1. Have replacement unit ready.
2. Turn off power supply: Set front panel breaker to off position.
3. Loosen captive screws (two at the bottom of each panel).
4. Remove power supply module by pulling out and lifting the module from the rack.
5. Verify voltages of input power are within specified operating range. (See voltage/current output checks of paragraph 6.3.3.1.)

NOTE

No input strapping or transformer winding jumpers are used.

6. Ensure front panel power switch on replacement unit is off.
7. Install replacement unit.
8. Turn unit on.

### 6.5.6 Replacing the Back-up (Reserve) Power Supply Batteries (Central Equipment Rack and Full Height Remote Power Rack)

NOTE

Depending on the ETVS BS configuration involved, the numbers and locations of batteries will vary. For the purposes of this procedure, a typical BS 3 configuration will be used.

1. Go to the Central Equipment Rack (or Remote Power Rack, as appropriate) containing the Battery LVD Unit; open the rear door of the rack to gain access to the LVD.

CAUTION

The ETVS will have no back-up power with the +24 VDC fuse (labeled "Fuse 1 Amp") removed. Any loss of AC power will result in the immediate shut down of the system.

2. On the Battery LVD unit only, remove the front panel +24 VDC fuse (labeled "Fuse 1 Amp") from the LVD front panel (labeled "Battery Connect" on LVD front panel). This isolates the batteries contained in the Power/Operator and/or Maintenance Rack Assemblies, removing the +24 VDC battery control voltage between the positive (+) battery terminal and the LVD.

3. On the front of either or both racks, remove the louvered (8.75" x 19") panel at the bottom of the rack assembly by removing the four 10-32 x ½ machine screws and four 10-32 retainer plate nuts securing the panel to the rack assembly.

NOTE

In the BS 3 configuration, permanently mounted battery shelves are located at the bottom of the rack assemblies. This is a typical arrangement for the ETVS system. The Basic System BS X designator determines the exact number of batteries (battery pairs) to be used and the corresponding number of racks containing the batteries.

4. Unbuckle the 42" battery tie-down strap securing the batteries (one strap per battery pair).

CAUTION

Read steps 4 and 6 of paragraph 6.3.1.4 before proceeding to step 5.

5. Remove the cable to the (-) terminal of one battery and the cable to the (+) terminal of the other (batteries are grouped in pairs). Install protective caps (stored in bag inside rack) on all (+) cables. Then, remove the cable connecting the (-) terminal of the first battery to the (+) terminal of the second.

CAUTION

Batteries weigh about 40 pounds each. Use of carrying straps is recommended if they are being carried/removed from their cartons individually to and from the equipment area and the storage area is located some distance away. If moving several batteries in their cartons at the same time, use of a hand truck is recommended. Handle batteries with care when removing and installing batteries within the close confines of the equipment rack.

6. Lift battery (-ies) from the battery shelf at the bottom of the equipment rack via the rear door opening, to be replaced one at a time, as needed.

NOTE

Before installing any replacement battery, ensure that it has been fully charged. During replacement of the batteries, there will be no battery charger in use at the rack assembly.

7. To install the replacement battery (-ies), place it on the shelf in position to be hooked up to battery cables. Re-connect all battery cables (that is, those of the affected battery pair—batteries are installed in pairs and only one pair can be checked at a time). Connect the interconnecting cable first, from the (+) terminal of one battery to the (-) terminal of the other, then the cables to the remaining (-) and (+) terminals of the affected battery pair.
8. Secure (re-buckle) the battery hold-down strap(s). Place protective caps back in storage bag.
9. Secure the louvered panel.
10. Reinstall fuse F1 in the LVD panel.
11. Close the rear door of rack(s).

### 6.5.7 Replacing System Alarm Panels (Central Equipment and Full Height Remote Power Racks)

NOTE

The main system alarm panel is located directly above the maintenance position equipment in the maintenance rack of the Central Equipment Rack; the other alarm panel is located at the remote position power rack.

1. Remove power to the panel by removing the appropriate fuse from the position fuse panel. Labeling of the fuse depends on the ETVS system configuration.
2. Unscrew the four panel mounting screws securing the unit on the central rack. (At the remote rack, two screws secure the remote alarm panel.)
3. Pull unit out from the rack assembly.
4. Identify, tag, and disconnect cables.
5. Remove unit from the rack.
6. To install, connect cables to the replacement unit and push the unit back into the rack.
7. Secure the panel with the mounting screws.
8. Reinstall fuse in position fuse panel for the SAP to reapply power.
9. To check for the audible alarm, press the front panel ALARM RESET/TEST switch. If working properly, the audible alarm will sound briefly.

### 6.5.8 Replacing a Gateway Computer

This procedure provides directions for a technician to adjust the configuration of a preloaded spare Gateway PC computer to replace a GATEWAY-A or GATEWAY-B computer in an operational site.

NOTE

Before commencing this procedure, back up the database.

1. Insert a blank formatted floppy disk into an on-line SCT.
2. In the SCT software, under File, select Backup.

3. Select drive a: then click Backup. A dialog box (shown below) will appear displaying Backing Up System Information.

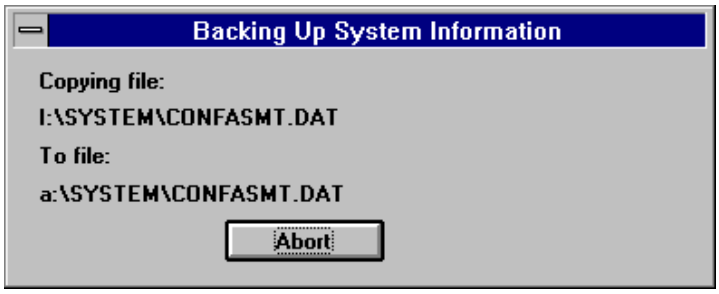


### 6.5.8.1 Identify and Replace Gateway

First find out which Gateway is being replaced (GATEWAY-A or GATEWAY-B) by looking at the active Gateway name on an SCT (if the existing Gateway name is GATEWAY-A, then the name of the Gateway to be replaced will be GATEWAY-B). If a Gateway computer is not operating, start with that non-operational one first. If the replacement is for an upgrade, start with the inactive one first.

NOTE

The operational status of the Gateway computers is available at the SCT/MCT, which provides information as to which computer is down from the icons at the bottom of the screen.

A SPARE Gateway PC cardfile will be expected to have DOS, Windows, the Gateway executable code, and NISR code preinstalled. These can be seen using File Manager as shown in section 6.5.8.3, step 1, after installation. If these prerequisites are not on the hard disk, return the unit to DENRO. This Gateway replacement should not have been in the SPARE locker.

1. Bring the replacement Gateway Computer to the work area.
2. Verify that the affected Gateway Computer may be taken off-line. This information comes from the Supervisor.
3. Turn off the power switch on the front of the Gateway Computer that is being replaced.
4. Pull the associated Gateway Interface card out of the main rack. Gateway Interface A is always on the left and Gateway Interface B is always on the right.

CAUTION

Be especially careful to keep the T connectors and the Ethernet cables from touching each other when disconnecting cables.

5. On the rear of the Gateway computer, disconnect the power cable attached to rear of the unit (at P1 connector), the Ethernet cables, and the Gateway Interface cable. (For rear panel connector locations, see **Figure 5-51.)** Identify, tag, and disconnect all cables connected to the unit.
6. To remove the defective unit from its rack adapter:
   a) Release the two captive retaining screws at the bottom of the front panel.
   b) Using the handle, slide defective unit out of rack assembly.

WARNING

When installing this unit (24 VDC PC) do not plug into a wall socket. The cord plug is similar to an AC plug. Do not try to force plug into AC wall socket. Plug is keyed to prevent this.

7. Install the replacement unit and fasten all retaining screws. This includes reconnecting all of the cables (including the power cables).

NOTE

If the plug on the keyboard being used for this procedure does not fit the keyboard connector on the rear of the Gateway unit (**Figure 5-51**) being replaced, use the AT to PS2 adapter (type: 5-Pin DIN to 6-Pin DIN) that should have been provided with your system. If not, this adapter can be procured at a local electronics or computer store.

8. Connect the monitor, keyboard, and mouse to the newly replaced Gateway.
9. Push the Gateway Interface card back into rack.
10. Turn on front panel POWER switch to start the new Gateway Computer.

### 6.5.8.2 Exit Gateway Program

When the Windows program starts, let the Gateway program load. The newly started Gateway will synchronize with the old Gateway. After it is running and synchronized (see SCT screen), the user must exit the Gateway program by selecting Exit under the File menu using the mouse before any editing or mapping should be done.

NOTE

If the newly installed Gateway has the same name as the active Gateway, there will be no synchronization. Should there be a notification, execute 6.5.8.7 at this time. This will effect a reboot.

### 6.5.8.3 Name the Gateway

This modified C:\WINDOW/DENROGW.INI file ID should be zero (“0”) for GATEWAY-A (main) and one (“1”) for GATEWAY-B (standby).

1. Run File Manager on the Gateway to be mapped (GATEWAY-A). This is found by repeatedly pressing the Alt-tab until Program Manager shows in the window. File Manager is in the Main Folder, so double-click that. Then double-click the File Manager icon. From the File Manager, go to the C:\WINDOWS directory by clicking on the icon to the left of “c”.

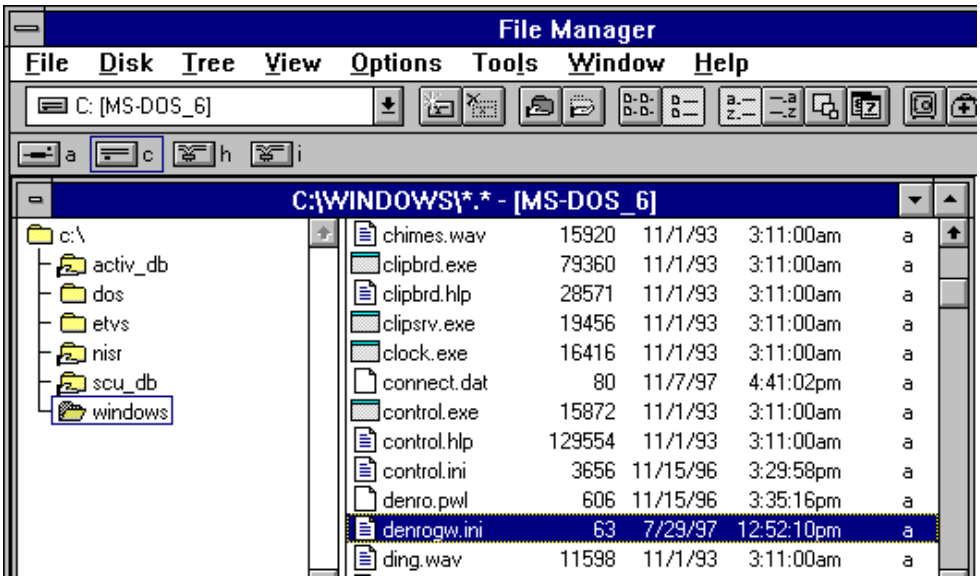

2. From File Manager, edit the DENROGW.INI file (double-click the file) and change the ID value under [GATEWAY].

NOTE

This pulls up NOTEPAD.EXE. The directions for NOTEPAD can be found under HELP from the menu.

For GATEWAY-A

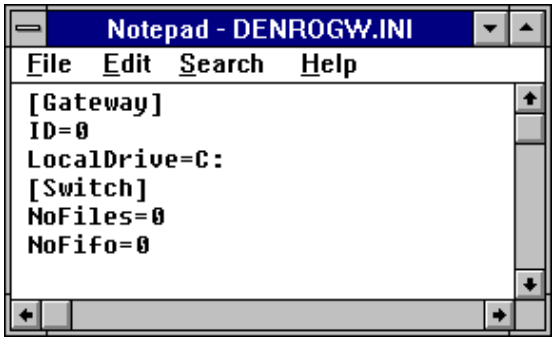


OR GATEWAY-B
[GATEWAY]
ID=1
LocalDrive=C:

Save and exit, both under the File sections.

### 6.5.8.4 Enable File Sharing

Verify file sharing is enabled for directories C:\ACTIV_DB, C:\SCU_DB, and C:\. File sharing is enabled for a directory if the icon next to the directory has a folder with a little hand on it.

If file sharing is not enabled, then enable file sharing by selecting the directory and going to the Disk-Share as . . . Click OK.

If the menu Disk-Share as . . . does not exist, then go to the Program Manager, Main, Windows Setup, Options, Change Network Settings, Sharing. Click the check box ‘I want to be able to give others access to my files’. OK.

If the directories C:\ACTIV_DB and C:\SCU_DB do not exist on the newly replaced Gateway, return the LRU to DENRO. They should show up in File Manager in the left window as shown in 6.5.8.3.

1. From File Manager (see 6.5.10.3), click “c” on the drive menu.
2. Look for these names in the left window.

### 6.5.8.5 Map Network Drive Path

Map network drive paths H: and I: to the opposite Gateway. If GATEWAY-A is the current computer being configured, then map the drives to GATEWAY-B. If GATEWAY-B is the current computer being configured, then map the drives to GATEWAY-A.

1. From File Manager, go to the Disk menu and select Connect Network Drive.
2. Under Drive: select H:.
3. In Show Shared Directories on: click the other Gateway name (GATEWAY-B).
4. In Shared Directories on \\GATEWAY-B click ACTIVE-DB.

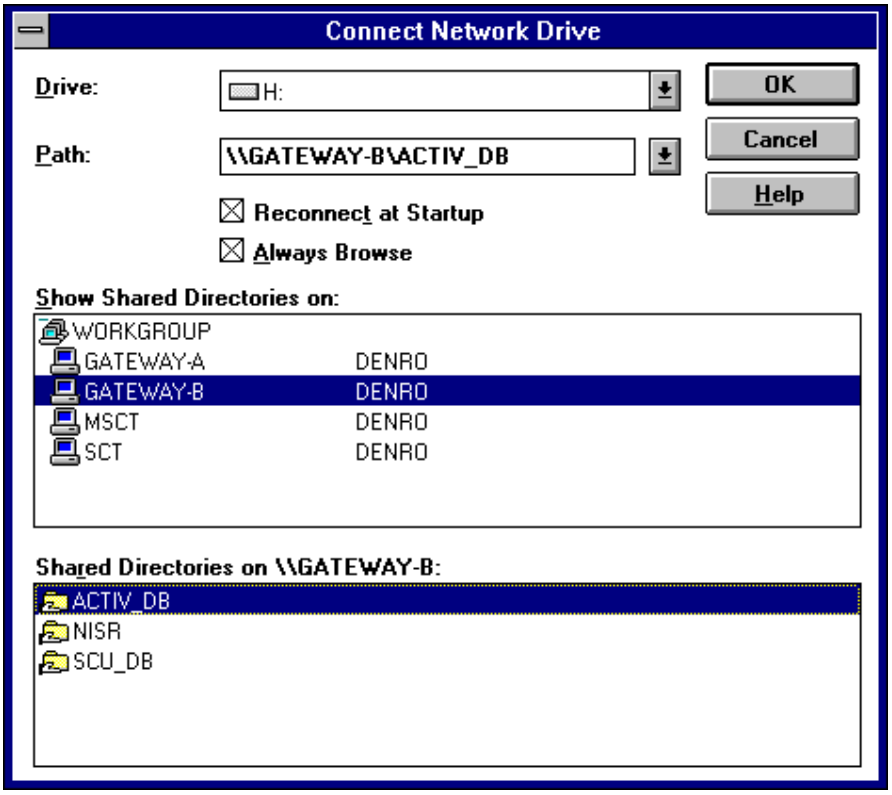

5. Click OK.
6. If a message displays that the drive is already connected, click OK.
7. Pull down DISK and select Connect Network Drive once again.
8. Under Drive: select I:.
9. In Show Shared Directories on: click the other Gateway name (GATEWAY-B).
10. In Shared Directories on \\GATEWAY-B click SCU_DB.

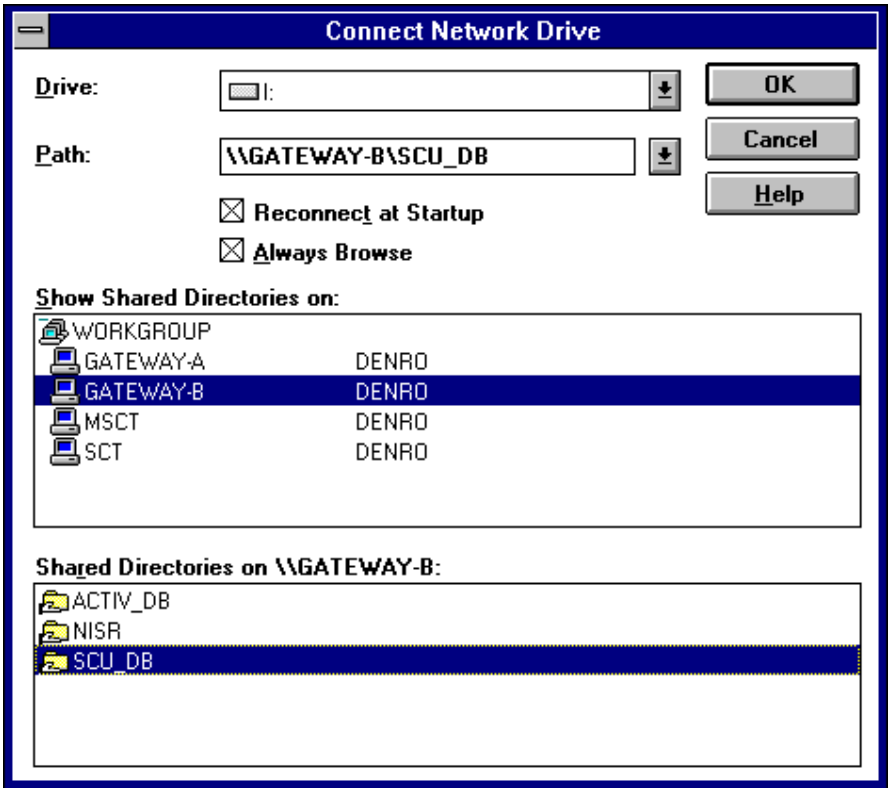


11. Click OK.
12. If a message displays that the drive is already connected, click OK.

NOTE

Other than the name of the Gateway, both units are mapped the same.

13. Exit File Manager.

### 6.5.8.6 Setting Network Date & Time on Replacement Unit

For the procedure to set the replacement unit for the correct date and time, refer to paragraph 2.4.3.7, *SCT User Manual*, which provides the necessary instructions to perform this operation at the SCT.

### 6.5.8.7 Setting Computer Name

Set the Computer Name (GATEWAY-A or GATEWAY-B) (e.g., if GATEWAY-B is being replaced, set Computer Name = GATEWAY-B).

1. Go to the Control Panel.
2. Double-click Network.
3. Set Computer Name: to GATEWAY-A or GATEWAY-B, as appropriate and click OK.

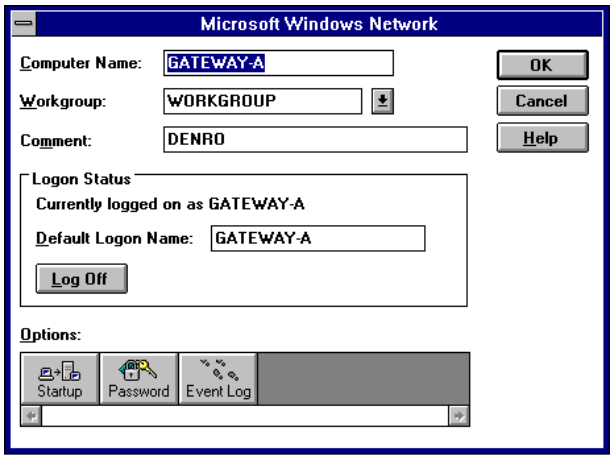


4. Close the Control Panel and close Main window.
5. Exit Windows by pulling down the FILE menu and selecting Exit.
6. A dialog box will appear to verify exit. Click OK.
7. A dialog box will appear to verify disconnect of users on network. Click OK.
8. Turn the power off of the replaced Gateway. Allow fan in PC to spin down.
9. Turn the power back on to the replaced Gateway.
10. The Gateway should be properly mapped.
11. From the SCT, send a global map.

NOTE

If there are problems with the database or if the database is lost, do a Restore under File in the SCT where it was saved.

12. Remove the floppy disk from SCT.

#### 6.5.8.8 Checking Out Gateway Operation

1. Power down the Gateway.
2. Disconnect the mouse, keyboard, and monitor.
3. Power the Gateway up again and check out its operation (see section 6.5.8.4 for help verifying directories).

NOTE

Do not take any action that may affect the new Gateway for several minutes to give it time to coordinate the other Gateway in the system.

### 6.5.9 Replacing the Ring Generator (CCA)

1. Pull this plug-in unit from the card cage using the front panel handle. It is not necessary to power down the rack.
2. Before replacing the ring generator, check the physical condition of the three fast-blow fuses mounted on the top side of the new card (two are rated at 1.5 amps, one at ¼ amp). If any of the fuses appear to be damaged or defective, obtain another ring generator card.
3. Slide the replacement unit into the card cage slot and push it all the way in so that the card is firmly secured in the edge connector.

### 6.5.10 Replacing the Uninterruptable Power Supply (UPS) For SCTs/MCTs, Printer, and Remote Servers

NOTE

SCTs/MCTs are powered from UPS units. These stand-alone units are connected to 120-VAC/50–60-Hz power sources via wall receptacles.

1. When replacing the UPS, ensure that the unit is powered down; if not, press the front panel switch directly below the I TEST button.
2. Disconnect the AC power cables: one each from the printer, the terminal, and the CPU (SCT or MCT position).

3. On the rear panel of the UPS, unplug the RS-232 serial digital interface cable.
4. Unplug the UPS rear panel power cord from the 120-VAC wall receptacle.
5. Remove the unit to a designated area for storage, repair, or other disposition.
6. Install a replacement unit and reconnect all cables, including the UPS power cord.
7. Apply AC power to the UPS by pressing the I TEST switch on the front panel.

### 6.5.11 Replacing the Radio Distribution Panel (see Figure 6-38)

For removal/replacement of this unit, contact Second Level Support.

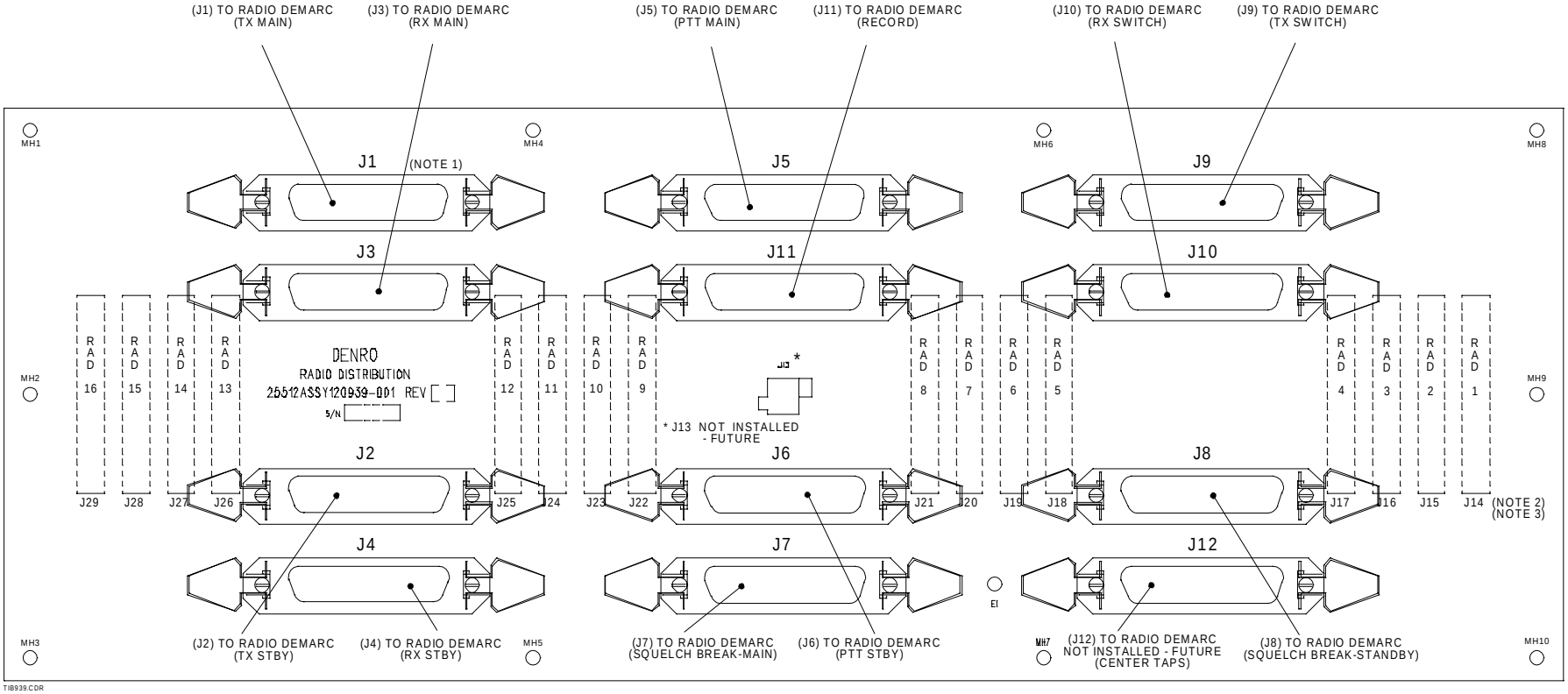


**NOTES:**
1. J1-J11: •CONNECTORS (CCA MTG, 36F, PRFT (PN 210024-003)
2. J14-J29: •CONNECTORS (HDR, ELECTRICAL, 20-PIN) (PN 210044-005); INSTALLED ON OPPOSITE SIDE OF PANEL.
3. J17-J20: •RADIO PROCESSOR CARDS SHOWN WITH DASHED LINES; CONNECTED AT J14-J29 (16 CARDS)

***Figure 6-38. Radio Distribution Panel***

***This page intentionally left blank.***

### 6.5.12 Replacing the Operator Distribution Panel (see Figure 6-39)

For removal/replacement of this unit, contact Second Level Support.

Associated with the Operator Distribution Panel are the Power Distribution Panel CCAs and the Isolated Bus (with cover) rack-mounted panel assemblies through which +24 VDC power is routed to the position equipment. Blown fuse alarm indications from the fuse panel assembly are also passed through the Power Distribution Panel. A Level of Repair Analysis (LORA) has indicated that the on-site removal/replacement/repair of these assemblies is not feasible since they require Second Level Support resources. Therefore, these units are not considered LRU replaceable/reparable, and are thus beyond the scope of this manual. Information presented herein on the Power Distribution Panel is provided for reference purposes only, **Figure 6-40** and **Tables 6-38** through **6-40** are provided to show the location/designations of the signal connectors on the Power Distribution Panel and to identify functional signals going through each J-connector on the panel.

***This page intentionally left blank.***

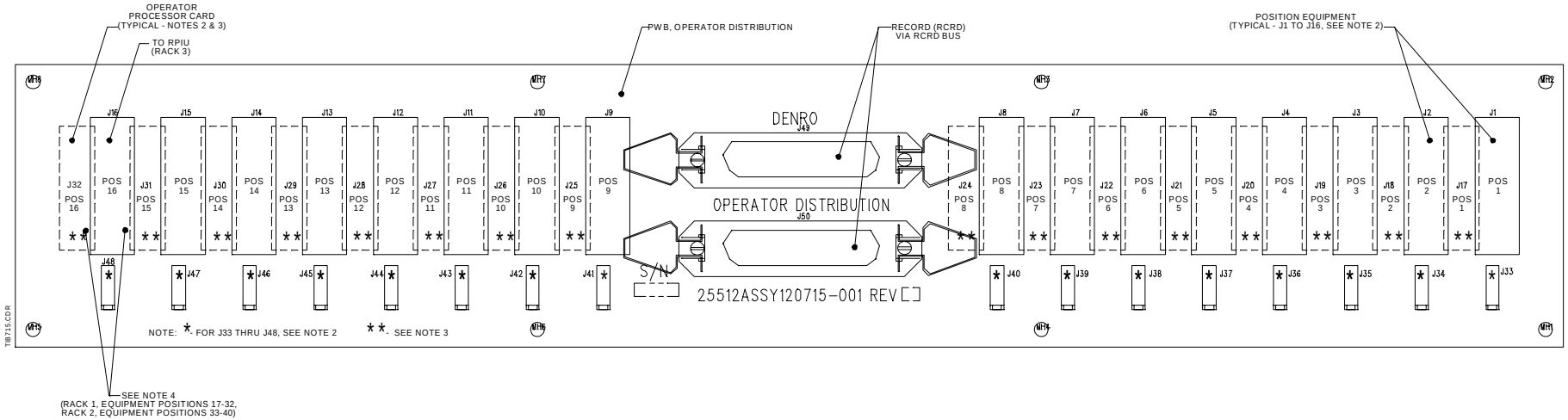


**NOTES:**

1. Connectors
   - J1-J16: Connector, Receptacle; DB15 PRFT (PN 210010-15)
   - J17-J32: Connector, HDR; Electric, 10 PIN (PN 210044-006)
   - J33-J48: Connector, VERT SHRD; 2x1 PIN PC MT (PN 210024-003)
   - J49-J50: Connector, MDL, CCA MTG; 36F PRFT (PN 217022-005)
2. Rack 1:
   - J1-J14: Position Equipment (Positions 1-16)
   - J15-J16: To Remote Position Interface Unit (RPIU) in Rack 3
   - J17-J32: Operator Processor Cards (Positions 1-16)
   - J33-J48: +24 VDC Power and Ground (Positions 1-16, Rack 1)
   - J49-J50: Record (via RCRD Bus)
3. Connectors Shown With Dashed Lines (---) Connected to J17-J32, are Operator Processor Cards, Located on Opposite Side (Far Side) of Panel.
4. See Tabulation Block on following page for:
   - Rack 1 (Equipment Positions 17-32)
   - Rack 2 (Equipment Positions 33-40).

***Figure 6-39. Operator Distribution Panel (Sheet 1 of 2)***

***This page intentionally left blank.***

4. Rack 1 (Equipment Positions 17 - 32)

| Rack 1 Pos | Equipment Position | Connector J# |
|---|---|---|
| 1 | 17 | J1<br>J33 (+24VDC POS PWR 1) |
| 2 | 18 | J2<br>J34 (+24VDC POS PWR 2) |
| 3 | – | J3 (to RPIU in Rack 3)<br>J35 (+24VDC PWR) (from PWR DIST PANEL) (POS PWR 3) |
| 4 | 20 | J4<br>J36 (+24VDC POS PWR 4) |
| 5 | 21 | J5<br>J37 (+24VDC POS PWR 5) |
| 6 | 22 | J6<br>J38 (+24VDC POS PWR 6) |
| 7 | 23 | J7<br>J39 (+24VDC POS PWR 7) |
| 8 | 24 | J8<br>J40 (+24VDC POS PWR 8) |
| 9 | 25 | J9<br>J41 (+24VDC POS PWR 9) |
| 10 | 26 | J10<br>J42 (+24VDC POS PWR 10) |
| 11 | 27 | J11<br>J43 (+24VDC POS PWR 11) |
| 12 | 28 | J12<br>J44 (+24VDC POS PWR 12) |
| 13 | – | J13 (to RPIU in Rack 3)<br>J45 (from PWR DIST PANEL) (POS PWR 13) |
| 14 | 30 | J14<br>J46 (+24VDC POS PWR 14) |
| 15 | 31 | J15<br>J46 (+24VDC POS PWR 15) |
| 16 | 32 | J16<br>J47 (+24VDC POS PWR 16) |

5. Rack 2 (Equipment Positions 33 - 40)

| Rack 1 Pos | Equipment Position | Connector J# |
|---|---|---|
| 1 | 33 | J1<br>J33 (+24VDC POS PWR 1) |
| 2 | 34 | J2<br>J34 (+24VDC POS PWR 2) |
| 3 | 35 | J3<br>J35 (+24VDC POS PWR 3) |
| 4 | 36 | J4<br>J36 (+24VDC POS PWR 4) |
| 5 | 37 | J5<br>J37 (+24VDC POS PWR 5) |
| 6 | 38 | J6<br>J38 (+24VDC POS PWR 6) |
| 7 | 39 | J7<br>J39 (+24VDC POS PWR 7) |
| 8 | 40 | J8<br>J40 (+24VDC POS PWR 8) |
| 9 | – | J9<br>J41 (+24VDC POS PWR 9) to Maintenance in Rack |
| 10 | – | J10<br>J42 (+24VDC POS PWR 10) from PWR DIST PANEL |
| 11 | – | J11<br>J43 (+24VDC POS PWR 11) to SUPV RECORD UNIT |
| 12 | – | J12<br>J44 (+24VDC POS PWR 12) to SUPV RECORD UNIT |
| 13 - 16 | – | J13 - 16 (unused)<br>J45 - 48 (unused) |

*Figure 6-39. Operator Distribution Panel (Sheet 2 of 2)*

***This page intentionally left blank.***

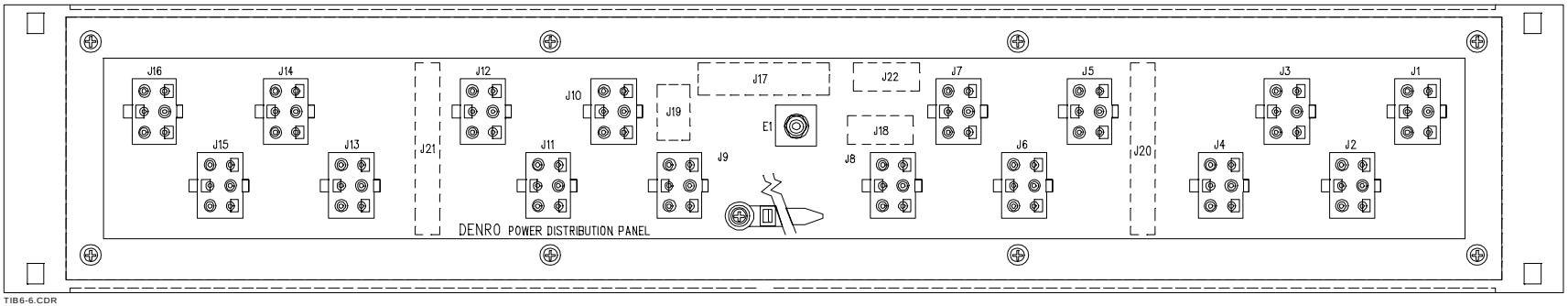


NOTES:

1. E1 - STUD, PWB, 10 X 32 X .625 IN.
   J1 THRU J16 - HDR, PWB MTG, 2 X 3 PIN, POWER
   J17 - HDR, VERT, 2 X 7 PIN L LCH PRFT
   J18 & J22 - CONNECTOR, RCPT ELEC PWB, 2 PIN MALE
   J19 - CONNECTOR, PIN HDR, PWB MTG 2 X 2 CONT
   J20 & J21 - HDR, VERT SHRD, 1 X 8 POSN PC MT

2. FOR POWER CONNECTIONS FOR 3 POWER DISTRIBUTION PANELS, SEE TABLES 6-38 THRU 6-40.

***Figure 6-40. Power Distribution Panel***

***This page intentionally left blank.***

| Source Location | Output Connector | Function | 120941-001 Power Distribution Panel Input Connector | 120941-001 Power Distribution Panel Input Connector | Destination |
|---|---|---|---|---|---|
| Fuse Panel 110942-001 | J1 | Fuse Alarm | J17 | J18 | V--Voltage Connect 110327-002 |
| | | | | J19 | Not Indicated |
| | | | | J22 | J18 (RMT ALARM on Power Distribution Panel #2) |
| | J2 | Power for Positions 1-8 | J20 | J1 (Position 1) | Position 1 |
| | | | | J2 (Position 2) | Position 2 |
| | | | | J3 (Position 3) | Position 3 |
| | | | | J4 (Position 4) | Position 4 |
| | | | | J5 (Position 5) | Position 5 |
| | | | | J6 (Position 6) | Position 6 |
| | | | | J7 (Position 7) | Position 7 |
| | | | | J8 (Position 8) | Position 8 |
| | J3 | Power for Positions 9-16 | J21 | J9 (Position 9) | Position 9 |
| | | | | J10 (Position 10) | Position 10 |
| | | | | J11 (Position 11) | Position 11 |
| | | | | J12 (Position 12) | Position 12 |
| | | | | J13 (Position 13) | Position 13 |
| | | | | J14 (Position 14) | Position 14 |

TIB6-199.CDR

*Table 6-38. Power Distribution Panel #1*

*Table 6-38. Power Distribution Panel #1 (Continued)*

| Source Location | Output Connector | Function | 120941-001 Power Distribution Panel Input Connector | 120941-001 Power Distribution Panel Input Connector | Destination |
|---|---|---|---|---|---|
| Fuse Panel 110942-001 | J3 | Power for Positions 9-16 - cont'd. | J21 | J15 | Position 15<br><br>AJ--Operator Distribution Panel (for Remote Positions) |
| | | | | J16 | Position 15<br><br>AJ--Operator Distribution Panel (for Remote Positions) |
| Isolation Power Busses | V/E3-9/# 1/4-20 | 24V Return | E1 | | |

*Table 6-39. Power Distribution Panel #2*

| Source Location | Output Connector | Function | 120941-001 Power Distribution Panel Input Connector | 120941-001 Power Distribution Panel Input Connector | Destination |
|---|---|---|---|---|---|
| Fuse Panel 110942-001 | J1 | Fuse Alarm | J17 | J18 | J22 (RMT ALARM on Power Distribution Panel #1) |
| | | | | J19 | Not Indicated |
| | | | | J22 | J18 (RMT ALARM on Power DistributionPanel #3) |
| Isolation Power Busses | J2 | Power for Positions 1-8 (17-24) | J20 | J1 (Position 1) | Position 17 |
| | | | | J2 (Position 2) | Position 18 |

TIB6-200.CDR

| Source Location | Output Connector | Function | 120941-001 Power Distribution Panel Input Connector | 120941-001 Power Distribution Panel Input Connector | Destination |
|---|---|---|---|---|---|
| Fuse Panel 110942-001 | J2 | Power for Positions 1-8 (17-24) (Continued) | J20 | J3 (Position 3) | Position 19<br><br>AL--Operator Distribution Panel (for Remote Positions) |
| | | | | J4 (Position 4) | Position 20 |
| | | | | J5 (Position 5) | Position 21 |
| | | | | J6 (Position 6) | Position 22 |
| | | | | J7 (Position 7) | Position 23 |
| | | | | J8 (Position 8) | Position 24 |
| | J3 | Power for Positions 9-16 (25-32) | J21 | J9 (Position 9) | Position 25 |
| | | | | J10 (Position 10) | Position 26 |
| | | | | J11 (Position 11) | Position 27 |
| | | | | J12 (Position 12) | Position 28 |
| | | | | J13 (Position 13) | Position 29<br><br>AM--Operator Distribution Panel (for Remote Positions) |
| | | | | J14 (Position 14) | Position 30 |
| | | | | J15 (Position 15) | Position 31 |
| | | | | J16 (Position 16) | Position 32 |
| Isolation Power Busses | W/E3-10/#1/4-20 | 24V Return | E1 | | |

TIB6-201.CDR

*Table 39. Power Distribution Panel #2 (Continued)*

| Source Location | Output Connector | Function | 120941-001 Power Distribution Panel Input Connector | 120941-001 Power Distribution Panel Input Connector | Destination |
|---|---|---|---|---|---|
| Fuse Panel 110942-001 | J1 | Fuse Alarm | J17 | J18 | J22 (RMT ALARM on Power Distribution Panel #2) |
| | | | | J19 | Not Indicated |
| | | | | J22 | Z--Rack 1 Top Card Cage Fuse Alarm |
| | J2 | Power for Positions 1-8 (33-40) | J20 | J1 (Position 1) | Position 33 |
| | | | | J2 (Position 2) | Position 34 |
| | | | | J3 (Position 3) | Position 35 |
| | | | | J4 (Position 4) | Position 36 |
| | | | | J5 (Position 5) | Position 37 |
| | | | | J6 (Position 6) | Position 38 |
| | | | | J7 (Position 7) | Position 39 |
| | | | | J8 (Position 8) | Position 40 |
| | J3 | Power for Positions 9-16 (41, other--see Destination column) | J21 | J9 (Position 9) | Position 41<br><br>AS--System Alarm Panel (which feeds the Maintenance Position and Speaker) |
| | | | | J10 (Position 10) | Spare |
| | | | | J11 (Position 11) | Spare |

TIB6-202.CDR

*Table 6-40 Power Distribution Panel #3*

| Source Location | Output Connector | Function | 120941-001 Power Distribution Panel Input Connector | 120941-001 Power Distribution Panel Input Connector | Destination |
|---|---|---|---|---|---|
| Fuse Panel 110942-001 (Continued) | J3 | Power for Positions 9-16 (41, other--see Destination column) (Continued) | J21 | J12 (Position 12) | Spare |
| | | | | J13 (Position 13) | Spare |
| | | | | J14 (Position 14) | AN--Operator Distribution Panel |
| | | | | J15 (Position 15) | AQ--Gateway Computers |
| | | | | J16 (Position 16) | AR--Gateway Computers |
| Isolation Power/Gnd Bus | X/E3-11/#1/4-20 | 24V Return | E1 | | |

TIB6-203.CDR

*Table 6-40. Power Distribution Panel #3 (Continued)*

### 6.5.13 Replacing Telephone Line Surge Protectors

NOTE

Before starting procedure, determine exact location in rack. Location of surge protectors may vary with each basic system configuration and/or from site to site.

NOTE

If green ground wire is not clearly visible/accessible from rear of rack, the unit may have to be accessed from front of rack by removing one or more panels, depending on system configuration.

NOTE

Your system may or may not be equipped with surge protectors and the quantities and types used may vary.

NOTE

Access to these devices (transient surge protectors) depends on site-specific requirements/basic system configuration, and the specific location of these devices within the particular system.

1. Open rack assembly rear door.
2. Disconnect 5-inch, ground wire with green insulation (3/8" braid type with Faston style terminal).

NOTE

The end with the Faston terminal is disconnected.

3. Remove Velcro strip on the demarc cable connected to the front of the transient surge protector.
4. Disconnect demarc cable.
5. Release two retentive clips.
6. Disconnect cable to rear (receptacle) end of transient surge protector.

NOTE

At its far end, this cable connects to the telephone card cages.

7. Unfasten the two retentive captive screws securing the transient surge protector to the surge protector card cage.
8. Pull transient surge protector out of its slot in the card cage.
9. Using procedures of paragraphs 6.4.9.1 and 6.4.9.2, trace and check condition of each transient surge protector.
10. Repeat steps 2 through 9 until all transient surge protectors in rack have been inspected.

NOTE

If any defective components (fuses) are located on a particular transient surge protector device, replace with new transient surge protector assembly.

11. Reinstall transient surge protector, including replacements; perform procedural steps in reverse order.

### 6.5.14 Replacing Remote Position Interface Unit (RPIU)

Replacement of an RPIU will shut down the position with which it is associated; therefore, this maintenance activity must be coordinated with ATC. There are four functional versions of this unit installed in the system:

- RPIU—Local, Non-Split Position, P/N 110956-003
- RPIU—Remote, Non-Split Position, P/N 110956-004
- RPIU—Local, Split Position, P/N 110956-001
- RPIU—Remote, Split Position, P/N 110956-002

Exact locations vary from system to system. In the Central Equipment Rack, the units are installed on a shelf at the bottom of one of the rack assemblies (e.g., radio); quantities required also vary. At remote locations, these units are located within their associated position consoles. Unit design ensures that the units are installed in the correct direction at either end by using male/female connector matching.

In the central rack, the units are positioned and held in place on a rack mounting bracket by a hold-down bracket and 6-32 x 5/16 panhead screws. The mounting arrangement at the equipment positions depends upon the physical design of the government-furnished consoles.

Removal/replacement procedures for the RPIU are provided as follows in paragraphs 6.5.14.1 and 6.5.14.2.

### 6.5.14.1 Central Rack Location

NOTE

Location of RPIU may vary from site to site, depending on ETVS Basic System Configuration (BS-1, -2, -3, or -4) used at the site. If your RPIUs are located in front/bottom of rack versus rear/bottom of rack (as in some systems), it may be necessary to remove a front louvered panel.

1. Open rear access door to rack assembly.
2. Loosen and remove the 6-32 x 5/16 panhead screws securing the RPIU hold-down bracket; remove the bracket.

NOTE

The following step will shut down the position associated with this RPIU; therefore, this maintenance activity must be coordinated with the ATC.

CAUTION

To avoid blowing of internal fuse at position (e.g., IBOP) when position cable is being removed, power must be shut off to the position before unplugging RPIU cables. (Male connector has DC power present on pins.)

3. Remove fuse for position being serviced at the position fuse panel.
4. Unplug cables at the following receptacles on the RPIU and disconnect ground cable to chassis at E1 stud:
   - J1, Central Rack (ISDN-S/Power)
   - J2, ISDN-U Link Cable
   - J3, +24V Auxiliary Power
   - J4, Position Equipment (ISDN-S)
5. Have replacement unit(s) available and ready to be installed.
6. Install replacement unit(s); reconnect the cables; secure hold-down bracket on units; close door at rear of rack assembly.

7. Replace fuse in position fuse panel.
8. If necessary, perform RPIU alignment; see procedure 6.6.5.11.
9. Run position confidence performance test (section 3.3) to assure equipment is operating properly; if proper equipment is verified, place position back on-line.

#### 6.5.14.2 Position/Remote Locations

Except for mounting arrangement, removal and replacement procedure for the remote units is the same as for the local units. Mounting is within the position equipment console.

### 6.5.15 Replacing Supervisor Record Position Equipment

#### 6.5.15.1 Equipment

This equipment consists of the following:

- Operator Processor (Supervisor Record) (CCA, w/Differential, 25 MHz)—Located at the Central Equipment Rack
- Supervisor Record Interface Unit
- Supervisor Recorders (2); Portable Tape Recorders, Remote MIC Control (Voice Activated)—Located at Supervisor's position
- Cables (including Patch and Ground)

#### 6.5.15.2 Removal and Replacement

1. Removal and replacement of the Supervisor Record Operator CCA are done per procedures of paragraph 6.5.3. This CCA requires no alignment; it has a front panel RESET pushbutton for rebooting purposes. (See paragraph 6.5.3 introductory paragraphs).
2. Removal and replacement of the Supervisor Record Interface Unit are accomplished as follows:
   a) Notify ATC of intent to replace Supervisor Record Interface Unit.
   b) See sketch A in this paragraph and **Figure 5-94** which shows both the output side (front panel) and the input side (rear panel) of the Supervisory Record Interface Unit. Identify, tag and disconnect the patch cable assembly P1 plug connectors from the RECORDER 1 and RECORDER 2 connections on the front panel. These patch cables (P/N 611932) connect the interface unit to the Supervisor Recorders at the Supervisor's position.

c) Tag and disconnect ISDN link cable from J2 rear panel receptacle. The ISDN link cable connects the Interface Unit to the Supervisor Record Operator Processor Card in Central Equipment Rack.

d) Tag and disconnect +24-VDC power cable from rear panel receptacle J4.

e) To reinstall Interface Unit, connect cables to J2, RECORDER 1, and RECORDER 2 receptacles. Then connect +24-VDC power cable to J4.

3. Removal and replacement of the Supervisor Recorders are accomplished as follows:

a) Notify ATC of intent to replace one or both recorders.

b) If only the recorders are to be replaced, disconnect the Supervisory Record Patch Cable Assembly (P/N 611932) from the Supervisory Interface Unit as follows:

1) Disconnect 0.136” mono phone plug P2 from the AUX jack on side of recorders.

2) Disconnect mono phone plug P3 from REM (remote) jack on side of recorders.

3) Disconnect coax Plug P4 from the DC 6V power jack on side of recorder.

4) (If required) Disconnect telephone Plug Connector P1 at the other end of patch cable from the RECORDER 1 (RECORDER 2) interface unit panel connections.

c) If earphones or microphones are plugged in, these must be unplugged and put aside.

d) To install new unit, proceed as follows:

1. Load a blank cassette tape, or one wanted to record over, into the cassette compartment (reference: see commercial vendor literature for loading blank cassette tapes).

2. Referring to sketch A, connect Supervisory Interface Unit patch cable assembly to the recorders as follows:

- P2 to AUX jack
- P3 to REW jack
- P4 to DC 6V (power) jack

3. See paragraph 3.6 for instructions on operating the Supervisory Record cassette recorder with the ETVS system.

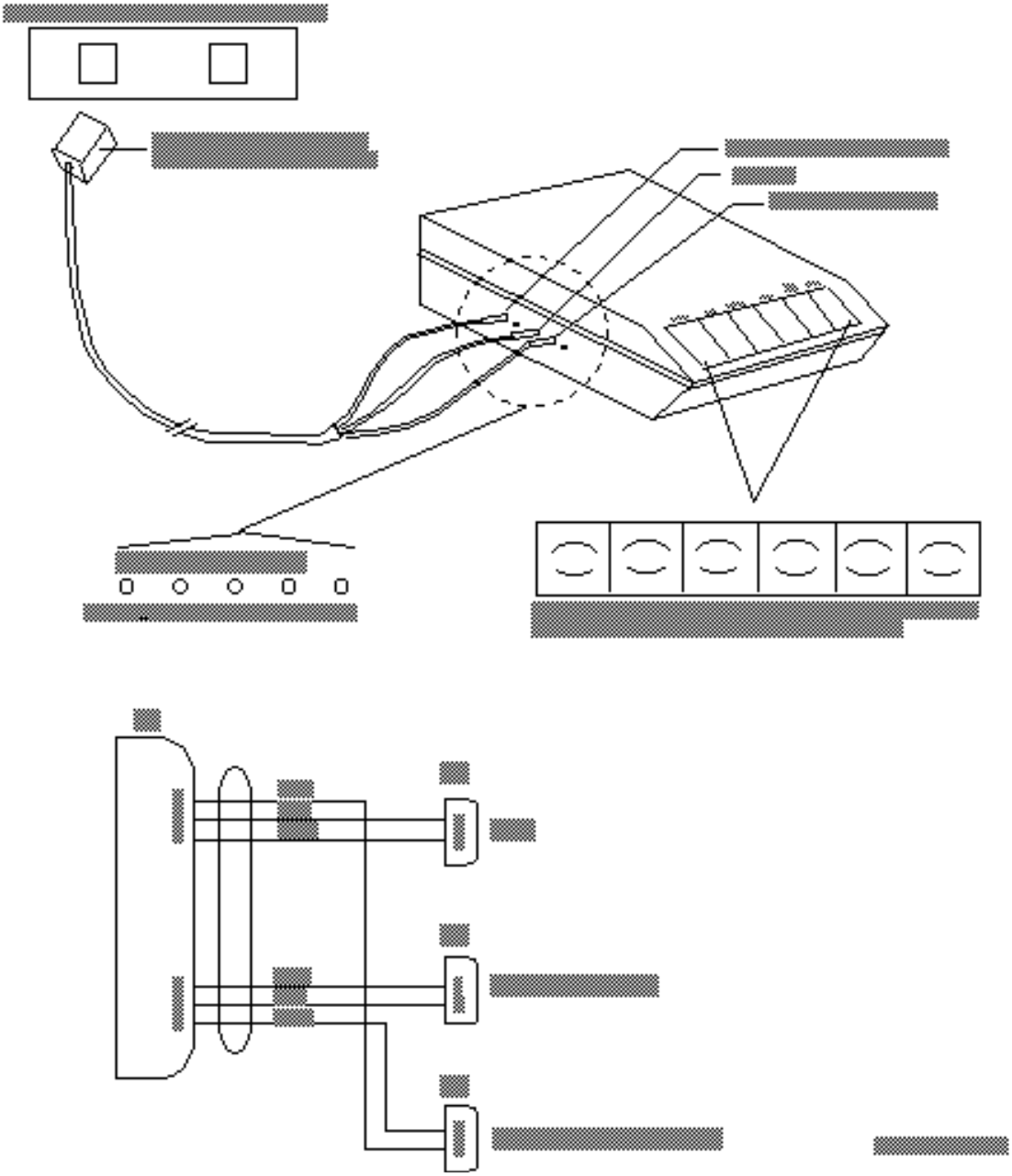

***Sketch A. Supervisory Recorder Set-up***

### 6.5.16 Mylar Label Strip Removal and Replacement for Hardkey Positions

CAUTION

When removing and replacing the mylar label strips at the hardkey operator positions, care must be taken not to bend, cut, wrinkle, or otherwise damage these strips. Do not used tools with sharp surfaces to wedge the strips into their holders or pull them out.

NOTE

When labels need to be replaced or changed at a hardkey position, it is strongly recommended that new/ replacement label strips be ordered from the manufacturer, DENRO, which employs the services of an outside vendor to prepare these strips. If in-house printing is attempted, and procedure is done incorrectly, (e.g., use of mylar stripping of incorrect thickness), the printer could be damaged.

NOTE

When ordering replacement labels (strips), ensure that such labels shall meet FAA-E-2894 requirements for size (e.g., minimum character height of 0.18”), orientation, readability, and durability).

1. Procedure

   a) To remove a mylar label strip from the label holder slot behind the keys, locate end of strip, then carefully pull up on top end of strip. Strip should be pulled straight up for several inches, then pulled in a slightly backward direction. Gently and slowly pull stripping from the slot of the label holder until bottom end of strip completely clears top of slot.

   b) To install replacement mylar label strip, carefully orient the strip while at the same time positioning the bottom end of the strip in top of slot in the label holder. Gently insert end of strip into top of label holder and slowly slide strip into holder until it is completely inserted and each label is properly aligned with its associated key. Do not attempt to force strip into holder (it may be necessary to trim strip slightly for better fit).

## 6.5.17 Replacing the SCTs/MCTs

### 6.5.17.1 Removal Procedure

1. Log out of SCTs/MCTs to be removed from system per step 1 of paragraph 6.4.4.1, Power-Down Procedure.
2. Power down SCTs/MCTs, local or remote, as applicable, as follows:

NOTE

Remote server computers are connected to remote SCTs/MCTs (referred to as RCTs) via a modem interface and plug into an optional UPS (if used).

   a) Set computer power switches (**Figure 5-48**) to off position.
   b) Check that all applicable power indicator LEDs are out.
3. Turn off each associated UPS per step 3 of paragraph 6.4.4.1.
4. Disconnect and remove following cables, using **Figures 5-48** and **5-49** as general references:

NOTE

Each cable should be identified and tagged before being disconnected.

   a) Video signal cable (connector to monitor and connector to video card connector on back of CPU).
   b) Cable connecting serial mouse (with DB9P connector) to CPU mouse port.
   c) Cable connecting keyboard (101/104 KY w/ 5-pin connector) to CPU keyboard port.
   d) 6-foot, parallel interface cable connecting dot matrix printer and CPU printer port
   e) RS-232 Serial Interface (UPS status line) connecting UPS to SCT
   f) Cable to relay activator card connector on CPU (only at a remote SCT requiring a System Alarm Panel connection)
   g) Cables to dual (redundant) LAN Ethernet connections on back of CPU. (NOTE: There are no Ethernet connections on remote SCTs/MCTs.)

h) If remote server computer being removed:

- From server end, UPS status line (RS-232 interface) to SCT CPU
- Modem interface cable connecting server to remote SCTs/MCTs
- Power cable connecting server to UPS

5. Remove all equipment from workstation area(s) to a suitable storage area for further disposition; this may include all or just part of the equipment listed below:

- CPU
- Monitor
- Keyboard
- Mouse
- Printer
- Remote Server Computer
- Cables

### 6.5.17.2 Replacement Procedure

1. Install the replacement SCT/MCT workstation (local or remote) as follows, using **Figures 5-48** and **5-49**, as applicable, as a general reference:

NOTE

System software is pre-loaded (installed) on the SCT/MCT prior to delivery of the replacement units to the site.

a) Connect the monitor video signal cable between the video card connector on the CPU and the Monitor connector as follows.

(1) Before connecting the cables, ensure that the monitor and CPU power switches are in the off position.

(2) Plug in the video signal connector to the rear of the monitor, tighten the screws at the connector, then connect cable to CPU video card connector.

b) Connect SCT LAN cables to the dual (redundant) LAN Ethernet connections on back of CPU

c) Connect cable to relay actuator card connector on CPU; ensure System Alarm Panel is connected (Remote SCT only).

d) Connect serial mouse (with DB9P connector) to mouse port on CPU.

e) Connect the 101/104 KY (w/5P DIN connector) keyboard to the CPU keyboard connector.

f) Connect the RS-232 cable from RS-232 port on the SCT (UPS status line) to the applicable (if used) UPS unit.

CAUTION

Before connecting AC power cords, ensure that SCT/MCT voltage selector switch (**Figures 5-48** and **5-49**) on back of CPU is set to 115V position.

g) Connect the AC power cords for the SCT/MCT, monitor, and printer to the associated UPS unit (optional for your system) that is plugged into an AC wall outlet.

h) If work station (local or remote) is provided with a printer, connect the printer cable from the parallel port (for printer) on the SCT/MCT CPU to the parallel port connector on the printer.

i) If a remote server computer is to be replaced, proceed as follows:

1) Ensure voltage selector switch on back of CPU (**Figure 5-48**) is in 115V position.

2) Connect modem interface cable between remote server computer modem and SCT/MCT modem (**Figures 5-48** and **5-49**).

3) If UPS is used, connect serial RS-232 cable from UPS to UPS status line connector on back of remote SCT/MCT CPU.

4) Hook up LAN cables to Dual (redundant) LAN Ethernet connectors on back of CPU.

2. Ensure that associated gateway computers (file servers) have power switches set to ON.

3. Ensure that the associated (optional) UPS unit(s) is/are turned on. If not, press power on (TEST) pushbutton on unit(s).

NOTE

Use the power-up procedure in Section 2.11 to restart SCTs/MCTs after replacement.

4. Per paragraph 2.11 (steps 1–5), turn on SCTs/MCTs at local and/or remote (RCT) stations (including remote server computer), as applicable, and login/enter password.

## 6.6 EQUIPMENT ALIGNMENT/STRAPPING PROCEDURES

### 6.6.1 Introduction

Alignment procedures are provided for selected cards in the ETVS system. In some cases, only strapping procedures are provided (as indicated in the list below). It is necessary to take only the affected channel off-line before commencing with the replacement alignment procedure; therefore, only one line is to be out of service, not the entire system. Proper clearance must be obtained before taking a channel off-line.

NOTE

The Transmission Level (TL) tutorial in Section 6.9 is provided to assist the user of the Technical Instruction Book in gaining a clearer understanding of the TL concept and the meaning, usage, and relationship of the units dBm0, dBm, and 0TLP used throughout the procedure.

Alignment and/or strapping procedures are provided in this manual for the following CCAs:

- 4-Wire PBX Interface (Alignment)
- 2-Wire PBX Interface(Alignment)
- Radio Processor (Radio Main/Standby Interface) (Alignment)
  (NOTE: Includes steps for accomplishing AGC alignment.)
- Remote Radio Processor (Alignment)
- ASU Telephone Interface (Alignment)
- E&M Telephone Interface (Alignment)
- Remote Position Interface Unit (RPIU) (Local/Remote, Non-split/Split unit positions) (Alignment)
- SS-1/SS-4 Telephone Interface (Alignment)
- Timing MUX Unit (Strapping Procedure Only)
- Maintenance Access Unit (CCA) (Strapping Procedure Only)
- Cluster MUX Unit (Strapping Procedure Only)

If a system LRU is not listed above (that is, CCAs, position equipment, rack-mounted unit, etc.), the item is factory pre-adjusted or is not aligned on-site by organizational-level technicians.

Appendix A provides assembly drawings showing the physical locations of the jumpers/strapping installed on each of the affected modules/cards. Appendix C,

System Standards and Tolerances, identifies the operating signals and tolerances essential to the operation of the ETVS.

#### 6.6.1.1 Position Equipment Adjustments

The position equipment, in general, does not require formal alignment maintenance procedures. There are screwdriver-only-adjusted potentiometers and addressing switches at several units that are set under very particular circumstances. These are located on the rear panels of the radio selectors, DA selectors, and programmable DA selectors.

There are access holes labeled “backlight” on the radio selectors and the programmable DA selectors. These are factory set and should not be readjusted in the field under any circumstances. Should backlighting become unacceptable after system becomes operational at a particular site, contact the manufacturer, DENRO, for any readjustments of backlighting to be made. These are critical adjustments and should only be done by the manufacturer’s technical representative. Otherwise, replace affected units per removal/replacement procedures of Section 6.

The address switches are located on the radio selectors, DA selectors (20- and 35-key), and programmable DA selectors. These switches are of the rotary hex type that are accessible through the rear cover of these units and can be set using a tuning tool (e.g., GC Electronics ‘Combination Aligner’…, Cat. #8275, or equivalent). Each unit listed above receives an $I^2C$ bus address at installation (see **Table 6-41**). When replacing console units it is necessary to set the address of the replacement unit to match that of the unit being replaced. Examples of these settings are as follows:

| UNIT | SWITCH | $I^2C$ BUS ADDRESS SETTINGS |
|---|---|---|
| DA Selector (20-key) | S1 | F—If first selector<br>E—If second |
| DA Selector (35-key) | S1 | F—If first selector<br>E—If second |
| Programmable DA Selector | S1 | D—If first selector<br>C—If second, etc. |
| Radio Selector | S1 | D—If first selector<br>C—If second, etc. |

Speaker S3, switch 8, sets the speaker to be split (closed) or non-split/combined (open). The remainder of S3 is not used (chime frequency is set at the SCT) and should be set to open.

### 6.6.1.2 $I^2C$ Address Settings for Position Equipment

The Inter-Integrated Circuit ($I^2C$) bus is a 2-wire closed-loop bus that connects the position modules. Each position module is tied to this bus and has a unique address on the bus. **Table 6-41** provides a listing of these addresses. These addresses must be established by the setting of S1 hex switches (per table) prior to installation of the equipment (initial settings of address switches are done at the manufacturer's facility).

***Table 6-41. $I^2C$ Addresses (of Devices with Hex Switch)***

| MODULE | S1 HEX SWITCH* |
|---|---|
| 20-key DA #1 ** | F |
| 20-key DA #2 ** | E |
| RADIO Module #1 | D |
| RADIO Module #2 | C |
| RADIO Module #3 | B |
| RADIO Module #4 | A |
| RADIO Module #5 | 9 |
| RADIO Module #6 | 8 |
| RADIO Module #7 | 7 |
| RADIO Module #8 | 6 |
| Programmable DA #1 | D |
| Programmable DA #2 | C |
| Programmable DA #3 | B |
| Programmable DA #4 | A |
| Programmable DA #5 | 9 |
| Programmable DA #6 | 8 |
| Programmable DA #7 | 7 |
| Programmable DA #8 | 6 |

* S1 accessible from rear of module.
** 35 key DA #1 - IBOP only

### 6.6.1.3 Alignments for System Power Supplies and Other Units

The system units listed below are pre-set (aligned) at the factory and alignment procedures are not provided for them. They also require Second Level Support for their removal and replacement as part of the corrective maintenance philosophy. However, performance checks are provided and these units should be checked (by Second Level Support) periodically or when malfunctioning is suspected. When such units are checked by Second Level Support and found to be malfunctioning, they are replaced with new units. These units are:

1. Assembly, Delayed Start Load LVD, 800 amps; P/N 110327-002 (BS-3 and BS-4) (Load Connect)

2. Assembly, LVD , Battery, SAP Interface, 800 amps; P/N 110327-003 (BS-3 and BS-4) (Battery Connect)
3. Assembly, LVD, SAP Interface, 200 amps; P/N 1100081-003 (BS-1, BS-2) and Remote Power Rack) (Battery Connect)
4. Power Supply Modules; P/N 400052-003
5. LVD, Assembly; Delayed Load Start LVD, 200 amps; P/N 110081-008 (BS-1, BS-2 and Remote Power Rack) (Load Connect)
6. Uninterruptable Power Supply; Floor Mount, 1400 VA; P/N 259245-001

Performance checks are provided in Section 6.3 of this manual.

### 6.6.2 CCA Front Panel Adjustments

Paragraphs 6.6.2.1 through 6.6.2.3 briefly describe the function and use of front panel switches and potentiometers in card alignments. For more detailed descriptions, see Section 5.

#### 6.6.2.1 Diagnostics (DIGN) Hex Switches (e.g., Device Type)

Sixteen-position rotary binary/hex switches are provided for many cards either as a front panel switch or an internal switch on the card. These switches are labeled, variously, as DIGN, SEL, Diagnostic (DIAG), or device type selector.

NOTE

DIGN and SEL are front panel selectors; on the TMU/CMU, they are set to ‘0’ for normal operation. On the Phone Conferencer, ‘0’ denotes “not used.“

Position ‘F’ on the device-type selector (usually, but not always, has reference designator of S1) places the interface card in the **align** mode and, as such, is used during alignment procedures for changing mode setting from normal operation to **align** mode. When the switch is set to ‘F,’ the interface is off-line and set up for test equipment and alignment procedures. In some cases, the ‘0’ position signifies normal operation; in other cases, it may indicate a switch is not used. In Section 5, the following tables list and describe these switch settings:

| TABLE | SWITCH | EQUIPMENT |
|---|---|---|
| Table 5-1 | SEL (S1) (set to ‘0’ for normal use) | TMU/CMU |
| Table 5-7 | Device Type (S1) | PBX 2-Wire Telephone |
| Table 5-8 | Device Type (S1) | PBX 4-Wire Telephone |
| Table 5-10 | Device Type (S1) | ASU |
| Table 5-12 | Device Type (S1) | E&M Telephone |
| Table 5-14 | Device Type (S1) | SS-1 Telephone |
| Table 5-18 | DIGN Switch (S1) | Radio Processor |

#### 6.6.2.2 RESET Switches

The RESET switches are SPDT front panel pushbuttons installed on selected cards to assist in rebooting the system during equipment maintenance (e.g., card replacement, alignment). Operation of this switch forces a reboot of the CCA’s on-board processor and may be used to ensure full system operation.

#### 6.6.2.3 Potentiometers

On the telephone cards, the front panel XMT ADJ and RCV ADJ potentiometers are used to adjust TX and RX amplifier gain during card alignment.

### 6.6.3 Card Assembly Internal Adjustments

See Section 5 for description of card assembly adjustments. Section 5 covers internal card adjustments for all cards having them. Various tables are provided in Section 5 and include internal (on board) strapping/switch settings, and switch settings for device type selection. See paragraph 6.6.2.1 and examples of such tables in Section 5; **Tables 5-7** and **5-9**.

### 6.6.4 Factory Pre-Set Adjustments (e.g., Power Supply Module V ADJ, LVD, UPS, etc.)

These adjustments are critical to the operation of the system and are made by the manufacturer prior to the delivery of the equipment; therefore, these controls are not to be adjusted on-site.

### 6.6.5 Alignment/Strapping Step-by Step Procedures

The procedures in paragraph 6.6.5 are of two types: alignment (adjustment) and strapping. In the alignment procedures, which may or may not include strapping information (provided only if needed by technician), the levels are adjusted to be within tolerance using a standard TTS. The TTS is also referred to as a TIMS. The strapping procedures (no alignments) for the TMU, CMU, and Maintenance Access Unit are done to ensure proper system operation by setting up the strapping configuration for these units prior to their introduction (installation) into the system. Card strapping requires the use of an alignment tool (GC Electronics 'Combination Aligner…', Cat. #8275 or equivalent). Section 5 provides tabular listings of jumper/strapping configurations for all system CCAs and units. These tables list the purpose of each jumper/strapping configuration and their settings (including options and ETVS settings). If a particular jumper is not used or is set to OFF, this is also indicated.

CAUTION

In the case of factory preset jumpers, changes must not be made by the on-site (field) technicians. Unauthorized changes could have major adverse impacts on system-wide operations.

The alignment procedures in paragraph 6.6.5 are all structured generally in the same way. Each contains a test equipment and set-up section (including a simplified block diagram of the alignment set-up) that provides a listing of the required tools, test equipment (including test cables), and extender card (if needed). Some of the alignment procedures also contain strapping information tables identifying ETVS default jumper settings for normal operation and site-specific jumper settings. The alignment procedures section includes preliminary steps and then the actual alignment steps referenced to a blank worksheet to be used for recording the adjusted values set within a specified tolerance (parameter value range) as required at the specific site. (NOTE: The specific values [e.g., TL level] must be determined for your specific site since values can vary from site to site.) The final part of each alignment procedure provides instructions for placing the aligned CCA or RPIU back into operation. The strapping procedures are structured in a similar manner, with instructions for removing the card, setting the jumpers to the positions indicated in the tables with the alignment tool, and returning the card to active operation.

### 6.6.5.1 PBX Interface (4-Wire)

CAUTION

Before undertaking these procedures, coordinate with ATC to ensure that the affected communications channel is idle. Otherwise, disruption or interruption of communications will occur.

CAUTION

This card contains ESD-sensitive devices. Use proper handling at all times.

NOTE

All tests must be performed with the input and output circuits disconnected from any active telephone circuit. Remove demarc clips, if necessary.

#### 6.6.5.1.1 Test Equipment and Setup

**Figure 6-41a** presents a simplified diagram covering the transmit path of the alignment; **Figure 6-41b** provides a similar diagram for the receive path.

a) Equipment

Card audio alignment requires the following equipment:

- Small flat-tip screwdriver or alignment tool (GC Electronics ‘Combination Aligner…’ Cat. #8275 or equivalent)
- Test cables
- HP TIMS 4934A (or equivalent TTS)

b) Setup (see **Table 6-42**)

***Table 6-42. PBX Interface (4-Wire) Audio Alignment Setup***

| AUDIO ALIGNMENT SETUP | TIMS |
|---|---|
| Level | Site-dependent (see **Table 6-43**) |
| Frequency | 1004 Hz |
| Impedance | 600 ohms |
| Terminated/Bridged Connection | Terminated |

6.6.5.1.2 Alignment Procedure

1. Remove demarc clips (if necessary).
2. Remove card to be aligned.
3. Note the current position of the internal (installed on card) device type rotary switch (S1) (see **Table 5-8**, Section 5, for a listing and definitions of switch S1 settings). This setting will be restored when alignment has been completed.
4. Using the alignment tool, set the device-type rotary switch to 'F' and reinsert card in slot. This places the card into alignment mode. (NOTE: Reinserting card in slot ensures card state change is recognized; card has no RESET pushbutton.)
5. Perform the following adjustments and checks.

a) Receive Level

1. Set the TIMS send channel for an impedance of 600 ohms. Set the TIMS receive channel to 600 ohms terminated.
2. Referring to **Table 6-43**, locate, in the 'Receive Path—Site-specific TL Level' column, the site-specific TL value. Set the TIMS output per the level given in the 'RCV BRDG Input (dBm)' column that corresponds to the site-specific TL level. Set the frequency on the TIMS to 1004 Hz.
3. Connect the TIMS send channel to the **RCV BRDG** front panel jack.
4. Connect the TIMS receive channel to the **RCD BRDG** front panel jack.
5. Adjust **RCV ADJ** potentiometer until a reading of -10 dBm ±0.5 dB is obtained on the TIMS.

b) Transmit Level

1. Set the TIMS send channel for an impedance of 600 ohms. Set the TIMS receive channel to 600 ohms terminated.
2. Set the output level to -10 dBm at 1004 Hz.
3. Connect the TIMS send channel to the **RCV BRDG** front panel jack.
4. Connect the TIMS receive channel to the **XMT BRDG** front panel jack.
5. Referring to **Table 6-43**, locate, in the 'Transmit Path—Site-specific TL Level' column, the site-specific TL value. Adjust the XMT ADJ potentiometer until the corresponding level from the 'Transmit Path—XMT BRDG' column is obtained (±0.5 dB).

#### 6.6.5.1.3 Card Replacement

If the 4-wire PBX card fails to align properly in any of the foregoing procedures, replace with a new card; see removal/replacement procedures of paragraph 6.5.3. Align replacement card per procedure before placing into operation.

#### 6.6.5.1.4 Placing Card Back Into Operation

If the previous steps have all been completed successfully, perform the following steps:

1. Disconnect all test cables.
2. Remove card from slot.
3. Restore original setting of device type switch (S1) (see **Table 5-8**, Section 5, for a listing and definitions of switch S1 settings).
4. Reinstall card (i.e., slide the card back into its card slot and push all the way in so that the card is firmly secured in its edge connector). This action restores card state to original operation.
5. Restore demarc clips (if necessary).

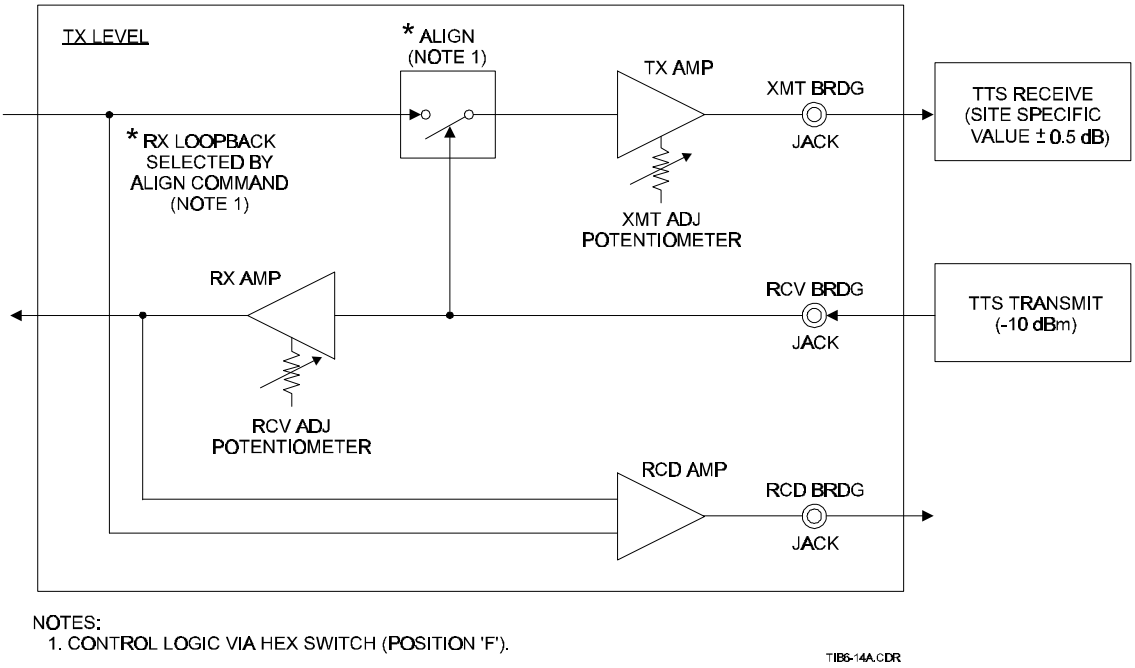


***Figure 6-41a. PBX Interface (4-Wire) Alignment Block Diagram (Transmit Path)***

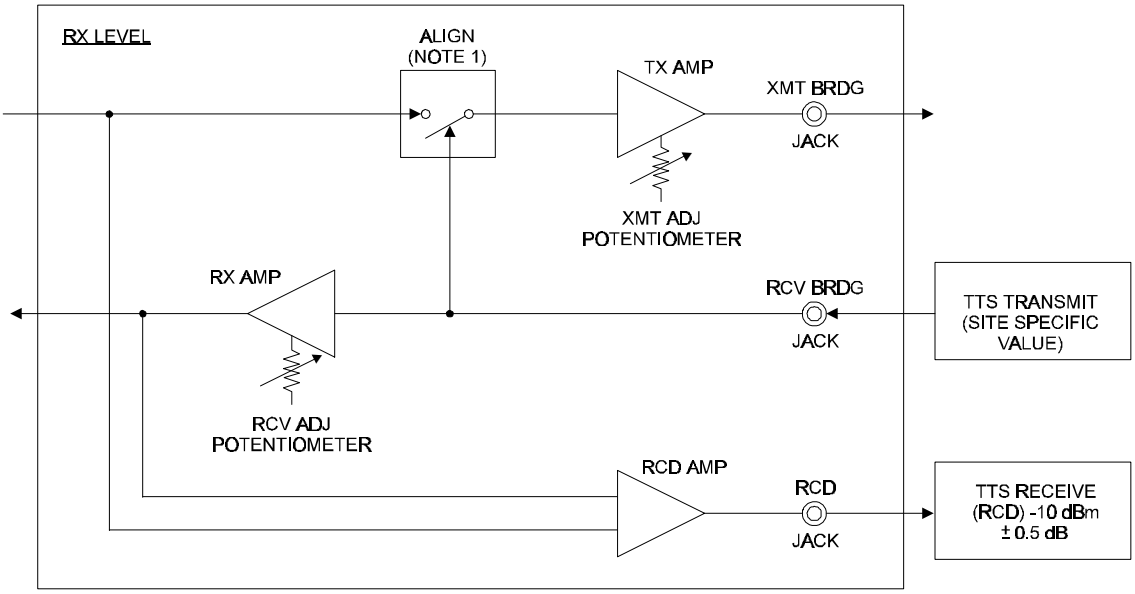


NOTES:
1. CONTROL LOGIC VIA HEX SWITCH (POSITION 'F').

TI65-14B.CDR

***Figure 6-41b. PBX Interface (4-Wire) Alignment Block Diagram (Receive Path)***

## *Table 6-43. PBX Interface (4-Wire) Alignment Worksheet*

| RECEIVE PATH | | | TRANSMIT PATH | | |
|---|---|---|---|---|---|
| Site-Specific TL level | RCV BRDG Input (dBm) | RCD BRDG* (RCRD) (dBm) | Site-Specific TL level | RCV BRDG** Input (dBm) | XMIT BRDG (dBm) |
| +12 | +2 | -10 | +12 | -10 | +2 |
| +11 | +1 | -10 | +11 | -10 | +1 |
| +10 | 0 | -10 | +10 | -10 | 0 |
| +9 | -1 | -10 | +9 | -10 | -1 |
| +8 | -2 | -10 | +8 | -10 | -2 |
| +7 | -3 | -10 | +7 | -10 | -3 |
| +6 | -4 | -10 | +6 | -10 | -4 |
| +5 | -5 | -10 | +5 | -10 | -5 |
| +4 | -6 | -10 | +4 | -10 | -6 |
| +3 | -7 | -10 | +3 | -10 | -7 |
| +2 | -8 | -10 | +2 | -10 | -8 |
| +1 | -9 | -10 | +1 | -10 | -9 |
| 0 TL | -10 | -10 | 0 TL | -10 | -10 |
| -1 | -11 | -10 | -1 | -10 | -11 |
| -2 | -12 | -10 | -2 | -10 | -12 |
| -3 | -13 | -10 | -3 | -10 | -13 |
| -4 | -14 | -10 | -4 | -10 | -14 |
| -5 | -15 | -10 | -5 | -10 | -15 |
| -6 | -16 | -10 | -6 | -10 | -16 |
| -7 | -17 | -10 | -7 | -10 | -17 |
| -8 | -18 | -10 | -8 | -10 | -18 |
| -9 | -19 | -10 | -9 | -10 | -19 |
| -10 | -20 | -10 | -10 | -10 | -20 |
| -11 | -21 | -10 | -11 | -10 | -21 |
| -12 | -22 | -10 | -12 | -10 | -22 |
| -13 | -23 | -10 | -13 | -10 | -23 |
| -14 | -24 | -10 | -14 | -10 | -24 |
| -15 | -25 | -10 | -15 | -10 | -25 |
| -16 | -26 | -10 | -16 | -10 | -26 |

* Adjust RCV ADJ potentiometer until a reading of -10 dBm ±0.5 dB is obtained.

** Adjust XMT ADJ potentiometer until the level in Column 3 is within ±0.5 dB of the level in Column 2.

### 6.6.5.2 PBX Interface (2-Wire)

CAUTION

Before undertaking these procedures, coordinate with the ATC Supervisor to ensure that the associated communications channel is idle. Otherwise, disruption or interruption of communications will occur.

CAUTION

This card contains ESD-sensitive devices. Use proper handling at all times.

NOTE

All tests must be performed with the input and output circuits disconnected from any active telephone circuit. Remove demarc clips, if necessary.

#### 6.6.5.2.1 Test Equipment and Setup

**Figure 6-42a** presents a simplified diagram covering the transmit path of the alignment; **Figure 6-42b** provides a similar diagram for the receive path. **Figure 6-42c** is a simplified diagram showing on-site (real line) Line Balancing setup.

a) Equipment

Card audio alignment requires the following equipment:

- Small flat-tip screwdriver or alignment tool (GC Electronics ‘Combination Aligner…’ Cat. #8275 or equivalent)
- Test cables (see **Table 1-1)**; special test cable, PJ 051 R to dual banana PJ051 R to “+” and “-” alligator test clips
- Extender Card (4 U Card Type, part #120933-001)
- (2) HP TIMS 4934A (or equivalent TTS)
- Impedance Matching Test Adapter (IMTA), DENRO P/N 110311-001, or equivalent

b) Setup (see **Table 6-44)**

***Table 6-44. PBX Interface (2-Wire) Audio Alignment Setup***

| AUDIO ALIGNMENT SETUP | TIMS |
|---|---|
| Level | Site-dependent (see **Table 6-45**) |
| Frequency | 1004 Hz |
| Impedance | 600 ohms |
| Terminated/Bridged Connection | Terminated |

NOTE

The 2-Wire PBX supports both 600- and 900-ohm impedances. Switch S3 determines the impedance for the PBX line card. When S3 is in the C1 position, the PBX has an impedance of 900 ohms. When S3 is in the C2 position, the PBX has an impedance of 600 ohms.

6.6.5.2.2 Alignment Procedure

1. Remove demarc clips (if necessary).
2. Remove card to be aligned.
3. Note the current position of the internal (installed on card) device-type rotary switch (S1). See **Table 5-7**, Section 5, for a listing and definitions of switch settings. This setting will be restored when alignment has been completed.
4. Using the alignment tool, set the device-type rotary switch to ‘F.’ This places the card into **alignment** mode.
5. Place card into extender card, then place extender card into slot. (NOTE: Inserting of extender card into slot enables card changed state to be recognized.)
6. Perform the following adjustments and checks.

a) Receive Level

1. Select the desired impedance for this interface 600/900 ohms by selecting either the C2=600 or C1=900 position on S3.

2. Set the TIMS send channel for an impedance of 600/900 ohms (the setting should match step 1). Set the TIMS receive channel to 600 ohms terminated.
3. Referring to **Table 6-45**, locate, in the 'Receive Path—Site-specific TL Level' column, the site-specific TL value. Set the TIMS output per the level given in the 'LINE BRDG Input (dBm)' column that corresponds to the site-specific TL level. Set the frequency on the TIMS to 1004 Hz.
4. Connect the TIMS send channel to the **LINE BRDG** front panel jack.
5. Connect the TIMS receive channel to the **RCD BRDG** front panel jack.
6. Adjust the **RCV ADJ** potentiometer until a reading of -10 dBm ±0.5 dB is obtained on the TIMS.

b) Balancing and Transmit Level

1. Connect the TIMS #1 send channel to the **XMT AMPL IN** front panel jack.
2. Adjust the output level on TIMS #1 to -10.0 dBm at 1004 Hz.
3. Connect the TIMS #1 receive channel (600/900 ohms) TERM to the **LINE BRDG** front panel jack.
4. Connect the TIMS #2 receive channel clip leads (600 ohms BRDG) to the AGND test point and the RX BAL test point.
5. Rotate S2 until the minimum level is obtained on the TIMS #2.

NOTE

For steps 5 and 6, if the minimum level exceeds the sensitivity of the TIMS (i.e., out of range of test equipment) and minimum level cannot be obtained, increase the output level of TIMS. Increasing the level to 0 dBm is recommended should an increase in TIMS output level become necessary.

6. Adjust R74 until the minimum level is obtained on the TIMS #2.
7. Referring to **Table 6-45**, locate, in the 'Transmit Path—Site-specific TL Level' column, the site-specific TL value. Adjust the **XMT ADJ** potentiometer until the corresponding level from the 'Transmit Path—XMT BRDG' column is obtained on TIMS #1 (±0.5 dB).

c) Real Line Balancing

The PBX line card to be aligned must now be connected to the external phone line with which it will be associated in normal operation at the site and balanced to that line.

1. Disconnect all test cables.
2. Restore the original setting of the device-type switch (S1).
3. Reboot the card by removing the card with the extender, then reinserting.
4. Restore demarc clips (if necessary).
5. At a position, select the interface that is being aligned and perform either step 5a or 5b, as appropriate.
   a) (Circuits with dial access) At the operator position, place a call to another position. Answer the call, then remove the handset to eliminate audio on the receive circuit of the 2-wire PBX interface under test.
   b) (Circuits without dial access) Coordinate with site where line terminates to answer call; remove handset to eliminate audio on receive circuit of the 2-wire PBX interface under test.
6. Connect TIMS send channel to the IMTA, then plug IMTA into the INSTRUCTOR (or TRAINEE) jack of the calling position.
7. Adjust the output level on TIMS to –10.0 dBm at 1004 Hz.
8. Connect TIMS receive channel clip leads (600 ohms BRDG) to the AGND and RX BAL test points.
9. Rotate S2 hex switch through all its positions until the minimum level is obtained on the TIMS. (NOTE: S2 has four positions – C71, C73, C72, C74).
10. Slowly adjust R74(located between S2 and S3) until the minimum level is obtained on the TIMS.
11. Re-check level for the value previously obtained in step b)7 of the Balancing and Transmit Level procedure. If necessary, readjust XMT ADJ potentiometer.

#### 6.6.5.2.3 Card Replacement

If the PBX (2-wire) card fails to align properly in any of the foregoing procedures, replace with a new card; see removal/replacement procedures of paragraph 6.5.3. Align replacement card per above procedures before placing into operation.

#### 6.6.5.2.4 Placing Card Back Into Operation

If the previous steps have all been completed successfully, perform the following steps:

1. Disconnect all test cables.
2. Remove card from extender.
3. Remove extender card.
4. Restore original setting of device-type switch (S1).
5. Reinstall card (i.e., slide the card back into its card cage slot and push all the way in so that the card is firmly secured in its edge connector). This action restores card state to original operation.
6. Restore demarc clips (if necessary).

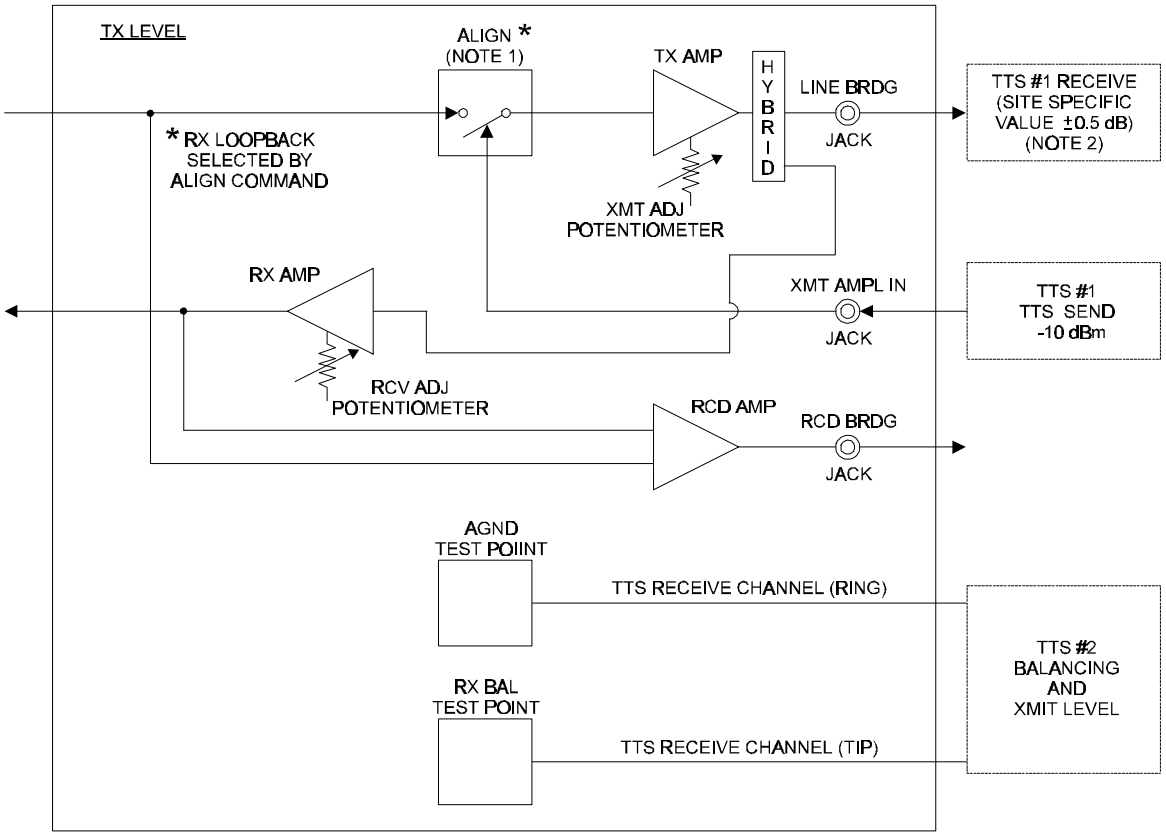


NOTES:
1. CONTROL LOGIC VIA HEX SWITCH (POSITION 'F').
2. FOR BALANCING AND TRANSMIT LEVEL PROCEDURE.

TIB6-43C.CDR

***Figure 6-42a. PBX Interface (2-Wire) Alignment Block Diagram (Balancing/Transmit Level Path)***

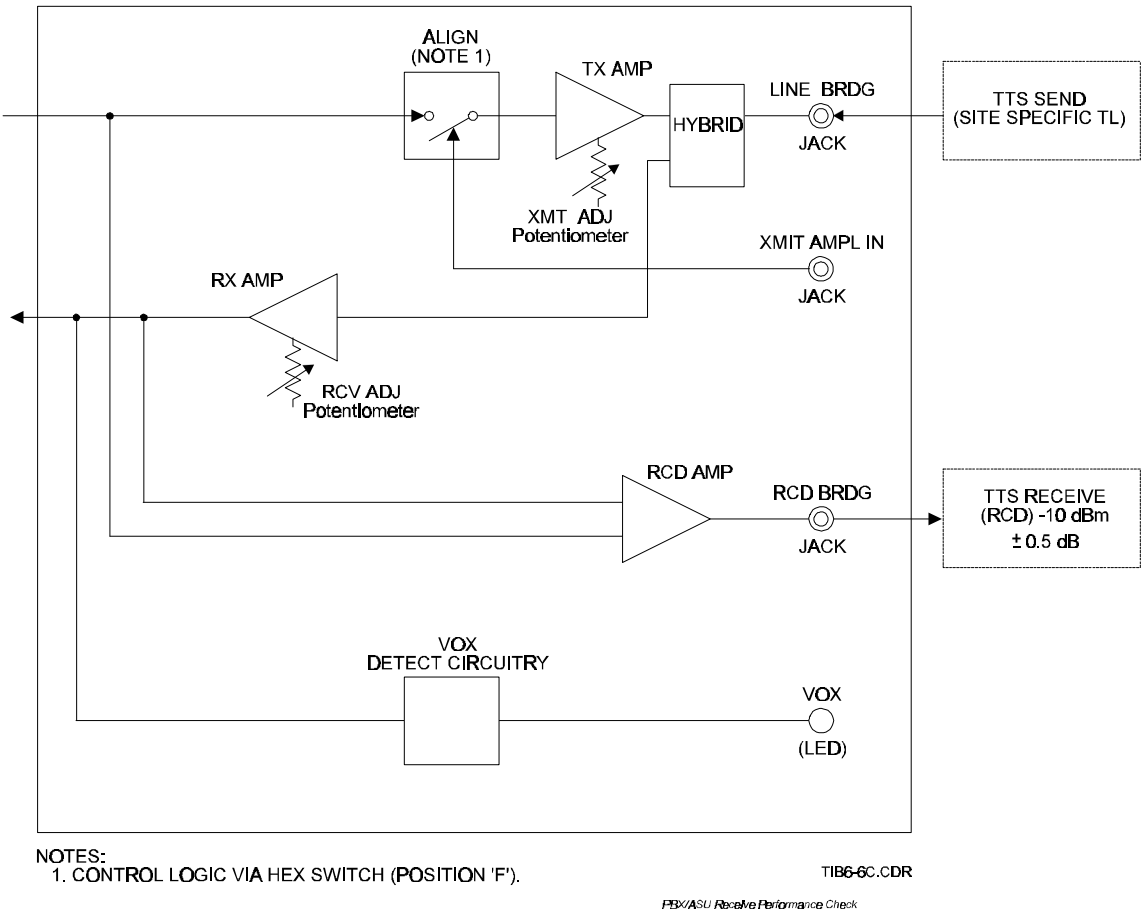


***Figure 6-42b. PBX Interface (2-Wire) Alignment Block Diagram (Receive Path)***

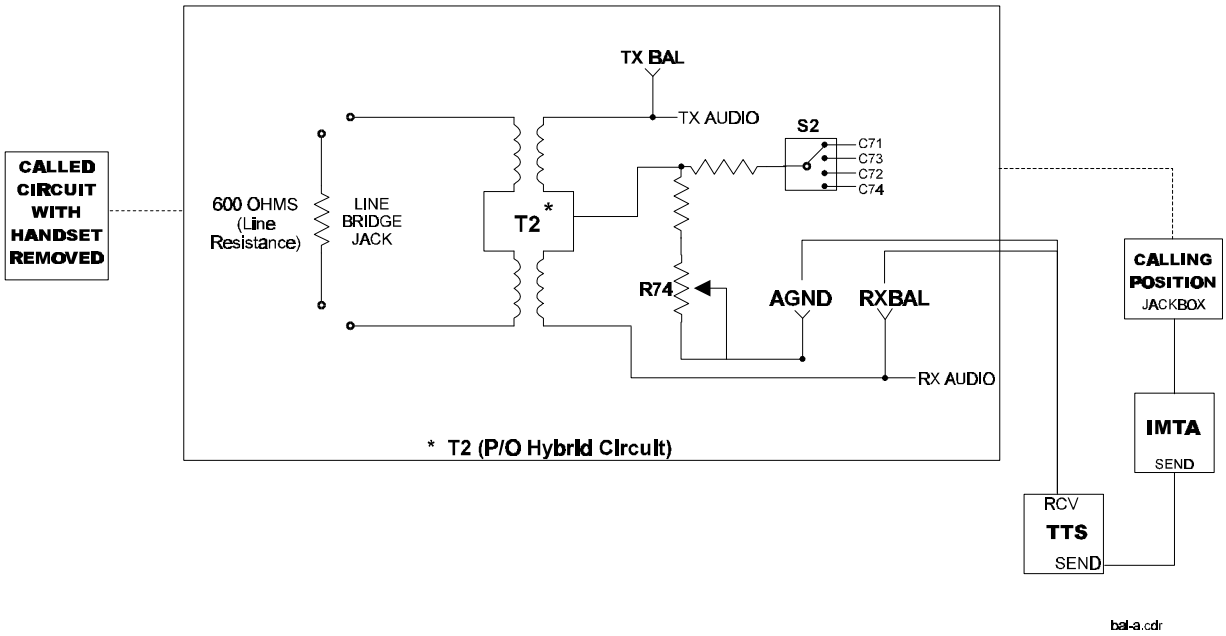


*Figure 6-42c. PBX Interface (2-Wire) Alignment Block Diagram (On Site [Real Line] Balancing)*

***Table 6-45. PBX Interface (2-Wire) Alignment Worksheet***

| RECEIVE PATH | | | TRANSMIT PATH | | |
|---|---|---|---|---|---|
| Site-Specific TL level | LINE BRDG Input (dBm) | RCD BRDG* (RCRD) (dBm) | Site-Specific TL level | LINE BRDG** Input (dBm) | XMIT AMPL IN (dBm) |
| +12 | +2 | -10 | +12 | -10 | +2 |
| +11 | +1 | -10 | +11 | -10 | +1 |
| +10 | 0 | -10 | +10 | -10 | 0 |
| +9 | -1 | -10 | +9 | -10 | -1 |
| +8 | -2 | -10 | +8 | -10 | -2 |
| +7 | -3 | -10 | +7 | -10 | -3 |
| +6 | -4 | -10 | +6 | -10 | -4 |
| +5 | -5 | -10 | +5 | -10 | -5 |
| +4 | -6 | -10 | +4 | -10 | -6 |
| +3 | -7 | -10 | +3 | -10 | -7 |
| +2 | -8 | -10 | +2 | -10 | -8 |
| +1 | -9 | -10 | +1 | -10 | -9 |
| 0 TL | -10 | -10 | 0 TL | -10 | -10 |
| -1 | -11 | -10 | -1 | -10 | -11 |
| -2 | -12 | -10 | -2 | -10 | -12 |
| -3 | -13 | -10 | -3 | -10 | -13 |
| -4 | -14 | -10 | -4 | -10 | -14 |
| -5 | -15 | -10 | -5 | -10 | -15 |
| -6 | -16 | -10 | -6 | -10 | -16 |
| -7 | -17 | -10 | -7 | -10 | -17 |
| -8 | -18 | -10 | -8 | -10 | -18 |
| -9 | -19 | -10 | -9 | -10 | -19 |
| -10 | -20 | -10 | -10 | -10 | -20 |
| -11 | -21 | -10 | -11 | -10 | -21 |
| -12 | -22 | -10 | -12 | -10 | -22 |
| -13 | -23 | -10 | -13 | -10 | -23 |
| -14 | -24 | -10 | -14 | -10 | -24 |
| -15 | -25 | -10 | -15 | -10 | -25 |
| -16 | -26 | -10 | -16 | -10 | -26 |

* Adjust RCV ADJ potentiometer until a reading of -10 dBm ±0.5 dB is obtained.

** Adjust XMT ADJ potentiometer until the level in Column 3 is within ±0.5 dB of the level in Column 2.

### 6.6.5.3 Radio Processor

CAUTION

Before undertaking these procedures, ensure that the associated communications channel is idle. Otherwise, disruption or interruption of communications will occur.

CAUTION

This card contains ESD-sensitive devices. Use proper handling at all times.

NOTE

All tests must be performed with the transmit and receive circuits disconnected from any radio equipment. Remove demarc clips, if necessary.

#### 6.6.5.3.1 Test Equipment and Setup

**Figure 6-43a** presents a simplified diagram covering the transmit path of the alignment; **Figure 6-43b** provides a similar diagram for the receive path.

a) Equipment

Card audio alignment requires the following equipment:

- Alignment tool (GC Electronics ‘Combination Aligner...’ Cat. #8275 or equivalent)
- Test cables
- HP TIMS 4934A (or equivalent TTS)

b) Setup (see **Table 6-46**)

***Table 6-46. Radio Processor Audio Alignment Setup***

| AUDIO ALIGNMENT SETUP | TIMS |
|---|---|
| Level | Site-dependent (see **Table 6-49**) |
| Frequency | 1004 Hz |
| Impedance | 600 ohms |
| Terminated/Bridged Connection | Terminated |

6.6.5.3.2 Strapping Information

The following strapping information can be used for checking an existing card or setting up a new card:

a) ETVS Default

**Table 6-47** below lists the default jumper settings for normal operation.

***Table 6-47. ETVS Default Jumper Settings (Radio Processor)***

| JUMPER | SETTING |
|---|---|
| W2 | 3 to 4 |
| W5 | 2 to 3 |
| W6 | OFF |
| W7 | OFF |
| W11 | 1 to 2 |

b) Site-Specific Jumper Settings

**Table 6-48** below lists jumpers whose settings may vary from site to site. The default settings used for ETVS are also indicated.

**Table 5-19** contains a complete listing of all Radio Processor card jumpers/strapping. Each jumper on a card is identified by a reference designator and defined as to use (purpose) and strapping setting. If a jumper is not used, this is so stated.

***Table 6-48. Radio Processor Site-Specific Jumper Settings***

| JUMPER* | DEFAULT | OPTIONS |
|---|---|---|
| W2 | 3 to 4 | PTT Confirm:<br>TX key (+V) 1 to 2<br>TX key (GND) 2 to 3<br>Local key confirm = 3 to 4 |
| W3 | 3 to 4 | PTT Signaling Information:<br>3 to 4 = Closure<br>Voltage Key:<br>2 to 4 and 3 to 5 = Positive on PTT1<br>1 to 3 and 4 to 6 = Return on PTT1<br>Simplex Key:<br>1 to 3 = Positive on Center-Tap<br>3 to 5 = Return on Center-Tap |
| W4 | OFF | Center-Tap Keying:<br>Jumper = Simplex keying enabled<br>No jumper = Simplex keying not enabled |
| W5 | 2 to 3 | PTT Switch Contacts:<br>1 to 2 = Normally Closed<br>2 to 3 = Normally Open |
| W8 | 2 to 3 | XMT Switch Contacts:<br>1 to 2 = Normally Closed<br>2 to 3 = Normally Open |
| W9 | 2 to 3 | RCV Switch Contacts:<br>1 to 2 = Normally Closed<br>2 to 3 = Normally Open |
| W15 | 1 to 2 | TX Compression (AGC): **<br>1 to 2 = Disabled<br>2 to 3 = Enabled |

* **NOTE:** Jumper reference designators W1 and W16 are assigned to stiffeners; W10, W12, and W13 are not used. W6 and W7 (RX center taps) are OFF (Normal). (See **Table 6-47**.)

** **NOTE:** For AGC radios, W15 will be set to 2 to 3 (Enabled).

### 6.6.5.3.3 Alignment Procedure

1. Remove demarc clips (if necessary).
2. Note the current position of the DIGN front panel hex switch (S1). This setting will be restored when alignment has been completed.
3. Using the alignment tool, set the DIGN front panel hex switch S1 to ‘F.’ This places the card into **alignment** mode.

4. Press front panel RESET button for change of state setting to be recognized.
5. Perform the following adjustments and checks.

a) Receive Level

1. Set the TIMS for 600 ohms terminated.
2. Referring to **Table 6-49**, locate, in the 'Receive Path—Site-specific TL Level' column, the site-specific TL value. Set the TIMS output per the level given in the 'RCV BRDG Input (dBm)' column that corresponds to the TL level from the site-specific TL column. Set the frequency on the TIMS to 1004 Hz.
3. Connect the TIMS send channel to the **RCV BRDG** front panel jack.
4. Connect the TIMS receive channel to the **RCD** front panel jack
5. Adjust the **RCV LVL** potentiometer until a reading of -10 dBm ±0.5 dB is obtained on the TIMS.

b) Transmit Level

NOTE

For radios configured for AGC, proceed to step c), AGC Radios, for transmit level (TL) adjustment.

1. Set the TIMS for 600 ohms terminated.
2. Set the output level to -10 dBm at 1004 Hz.
3. Connect the TIMS send channel to the **RCV BRDG** front panel jack.
4. Connect the TIMS receive channel to the **XMT BRDG** front panel jack.
5. Referring to **Table 6-49**, locate, in the 'Transmit Path—Site-Specific TL Level' column, the site-specific TL value. Adjust the **XMT LVL** potentiometer until the corresponding level from the 'Transmit Path—XMT BRDG' column is obtained (±0.5 dB).

c) AGC Radios

NOTE

AGC only affects the transmit (XMIT) path of radios. Refer to paragraph 6.9.3, Radio AGC Transmit Adjust Tutorial, for an understanding of the effects that the AGC circuitry has on the transmit path adjustments.

1. Set the TIMS for 600 ohms terminated.
2. Set the output level to -10 dBm at 1004 Hz.
3. Connect the TIMS send channel to the **RCV BRDG** front panel jack.
4. Connect the TIMS receive channel to the **XMT BRDG** front panel jack.
5. Referring to **Table 6-49**, locate, in the 'Transmit Path—Site-Specific TL Level' column, the site-specific TL value. Adjust the **XMT LVL** potentiometer until the corresponding level from the 'Transmit Path—XMT (AGC radios)' column is obtained (±0.5 dB).

#### 6.6.5.3.4 Card Replacement

If the Radio Processor card fails to align properly in any of the foregoing procedures, replace with a new card; see removal/replacement procedures of paragraph 6.5.3. Align replacement card per above procedures before placing into operation.

#### 6.6.5.3.5 Placing Card Back Into Operation

If the previous steps have all been completed successfully, perform the following steps:

1. Disconnect all test cables.
2. Restore DIGN front panel hex switch (S1) to its original setting.
3. Press front panel RESET button.
4. Restore demarc clips (if necessary).

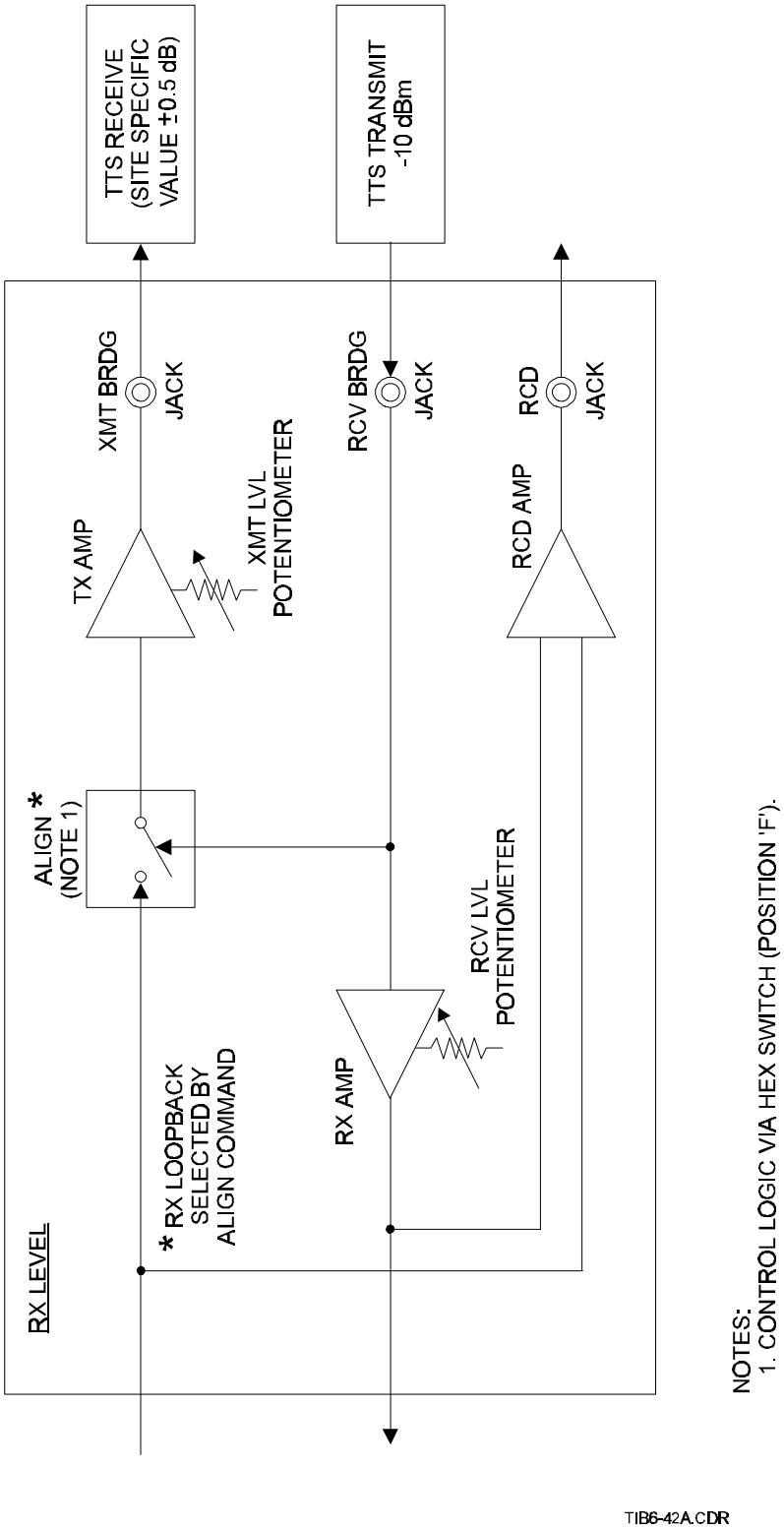


***Figure 6-43a. Radio Processor Alignment Block Diagram (Transmit Path)***

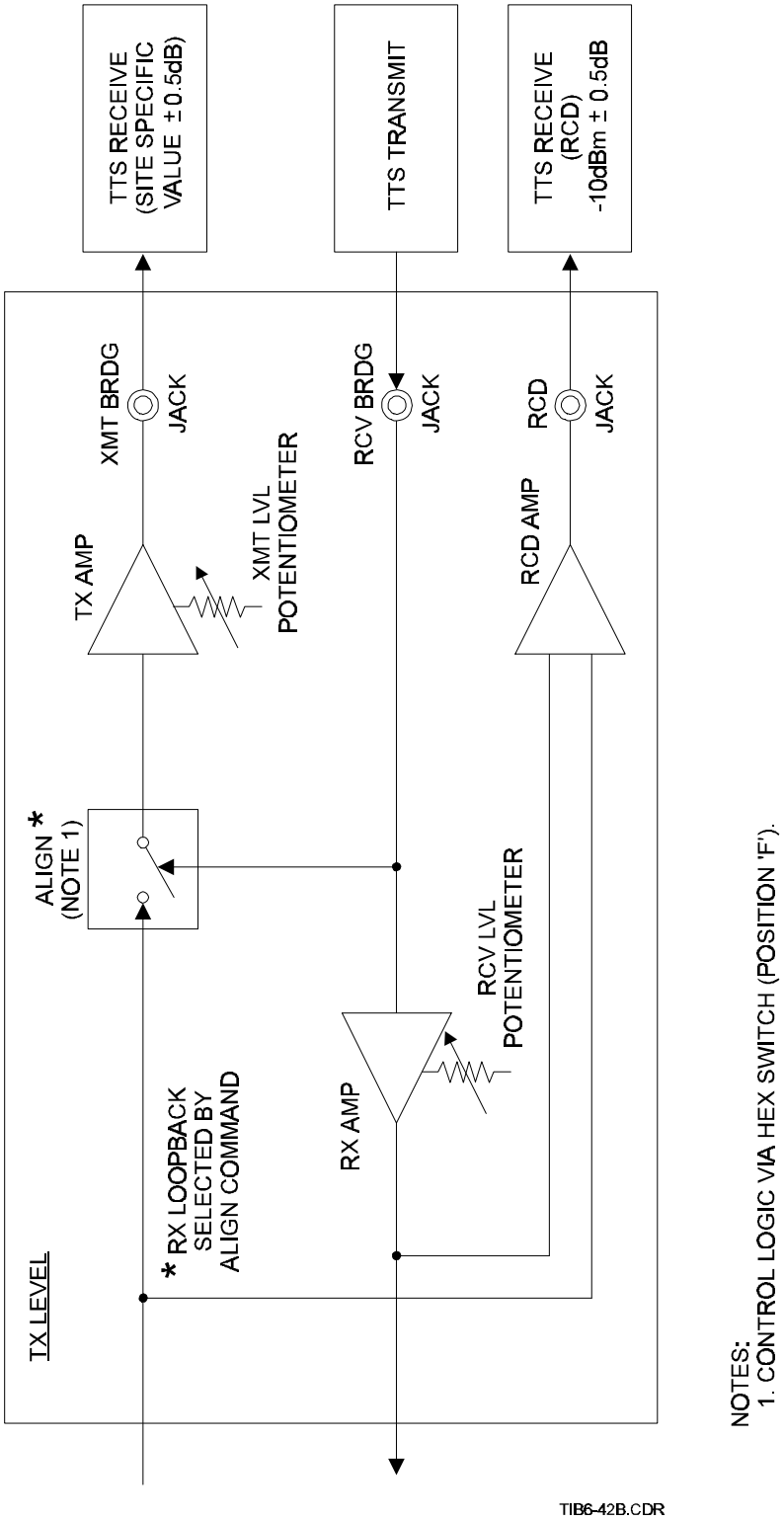


***Figure 6-43b. Radio Processor Alignment Block Diagram (Receive Path)***

## *Table 6-49. Radio Processor Alignment Worksheet*

| RECEIVE PATH | | | TRANSMIT PATH | | | |
|---|---|---|---|---|---|---|
| Site-Specific TL level | RCV BRDG Input (dBm) | RCD BRDG* (RCRD) (dBm) | Site-Specific TL level | RCV BRDG** Input (dBm) | XMIT BRDG (dBm) | XMIT*** (AGC radios) |
| +12 | +2 | -10 | +12 | -10 | +2 | -8 |
| +11 | +1 | -10 | +11 | -10 | +1 | -9 |
| +10 | 0 | -10 | +10 | -10 | 0 | -10 |
| +9 | -1 | -10 | +9 | -10 | -1 | -11 |
| +8 | -2 | -10 | +8 | -10 | -2 | -12 |
| +7 | -3 | -10 | +7 | -10 | -3 | -13 |
| +6 | -4 | -10 | +6 | -10 | -4 | -14 |
| +5 | -5 | -10 | +5 | -10 | -5 | -15 |
| +4 | -6 | -10 | +4 | -10 | -6 | -16 |
| +3 | -7 | -10 | +3 | -10 | -7 | -17 |
| +2 | -8 | -10 | +2 | -10 | -8 | -18 |
| +1 | -9 | -10 | +1 | -10 | -9 | -19 |
| 0 TL | -10 | -10 | 0 TL | -10 | -10 | -20 |
| -1 | -11 | -10 | -1 | -10 | -11 | -21 |
| -2 | -12 | -10 | -2 | -10 | -12 | -22 |
| -3 | -13 | -10 | -3 | -10 | -13 | -23 |
| -4 | -14 | -10 | -4 | -10 | -14 | -24 |
| -5 | -15 | -10 | -5 | -10 | -15 | -25 |
| -6 | -16 | -10 | -6 | -10 | -16 | -26 |
| -7 | -17 | -10 | -7 | -10 | -17 | N/A |
| -8 | -18 | -10 | -8 | -10 | -18 | N/A |
| -9 | -19 | -10 | -9 | -10 | -19 | N/A |
| -10 | -20 | -10 | -10 | -10 | -20 | N/A |
| -11 | -21 | -10 | -11 | -10 | -21 | N/A |
| -12 | -22 | -10 | -12 | -10 | -22 | N/A |
| -13 | -23 | -10 | -13 | -10 | -23 | N/A |
| -14 | -24 | -10 | -14 | -10 | -24 | N/A |
| -15 | -25 | -10 | -15 | -10 | -25 | N/A |
| -16 | -26 | -10 | -16 | -10 | -26 | N/A |

* Adjust RCV ADJ potentiometer until a reading of -10 dBm ±0.5 dB is obtained.

** Adjust XMT ADJ potentiometer until the level in Column 3 is within ±0.5 dB of the level in Column 2.

*** Setting of the DIGN front panel hex switch to “F” position bypasses the AGC circuitry. Levels in this column compensate for the 10-dB gain the AGC provides when normalizing a -10 dB input (that is injected either at the RCV BRDG jack or position jackbox) to 0 dBm.

### 6.6.5.4 ASU Interface

CAUTION

Before undertaking these procedures, coordinate with the ATC Supervisor to ensure that the associated communications channel is idle. Otherwise, disruption or interruption of communications will occur.

CAUTION

This card contains ESD-sensitive devices. Use proper handling at all times.

NOTE

All tests must be performed with the input and output circuits disconnected from any active telephone circuit. Remove demarc clips, if necessary.

#### 6.6.5.4.1 Test Equipment and Setup

**Figure 6-44a** presents a simplified diagram covering the transmit path of the alignment; **Figure 6-44b** provides a similar diagram for the receive path. **Figure 6-44c** is a simplified diagram showing on-site (real line) Line Balancing procedure setup.

a) Equipment

Card audio alignment requires the following equipment:

- Small flat-tip screwdriver or alignment tool (GC Electronics ‘Combination Aligner…’ Cat. #8275 or equivalent)
- Test cables (see **Table 1-2**); special test cable, PJ 051 R to dual banana PJ051, to “+” and “-“ alligator test clips
- Extender Card (4 U Card Type, part #120933-001)
- (2) HP TIMS 4934A (or equivalent TTS)
- Impedance Matching Test Adapter (IMTA), DENRO P/N 110311-001, or equivalent

b) Setup (see **Table 6-50**)

***Table 6-50. ASU Audio Alignment Setup***

| AUDIO ALIGNMENT SETUP | TIMS |
|---|---|
| Level | Site-dependent (see **Table 6-51**) |
| Frequency | 1004 Hz |
| Impedance | 600 ohms |
| Terminated/Bridged Connection | Terminated |

NOTE

The ASU supports both 600- and 900- ohm impedances. Switch S3 determines the impedance for the ASU line card. When S3 is in the C1 position, the ASU has an impedance of 900 ohms. When S3 is in the C2 position, the impedance is 600 ohms.

NOTE

See **Table 5-11** for ASU Telephone Interface strapping. Ensure jumper/ strapping settings are as identified in **Table 5-10** (Device Type S1 settings).

6.6.5.4.2 Alignment Procedure

1. Remove demarc clips (if necessary).
2. Remove card to be aligned.
3. Note the current position of the device-type rotary switch (S1) installed on card. This setting will be restored when alignment has been completed.
4. Using the alignment tool, set the device-type rotary switch to ‘F.’ This places the card into **alignment** mode.
5. Place card into extender card, then place extender card into slot.
6. Perform the following adjustments and checks.

a) Receive Level

1. Determine the impedance setting for this interface (i.e., 600 or 900 ohms). Selection will be either: S3 position C2 (600) or position C1 (900). If setting change is necessary, set switch to desired setting.
2. Set the TIMS send channel for an impedance of 600/900 ohms (the setting should match step 1). Set the TIMS receive channel to 600 or 900 ohms terminated.
3. Referring to **Table 6-51**, locate, in the 'Receive Path—Site-specific TL Level' column, the site-specific TL value. Set the TIMS output per the level given in the 'LINE BRDG Input (dBm)' column that corresponds to the site-specific TL level. Set the frequency on the TIMS to 1004 Hz.
4. Connect the TIMS send channel to the **LINE BRDG** front panel jack.
5. Connect the TIMS receive channel to the **RCD BRDG** front panel jack.
6. Adjust the **RCV ADJ** potentiometer until a reading of -10 dBm ±0.5 dB is obtained on the TIMS.

b) Balancing and Transmit Level

1. Connect the TIMS #1 send channel to the **XMT AMPL IN** front panel jack.
2. Adjust the output level on TIMS #1 to -10.0 dBm at 1004 Hz.
3. Connect the TIMS #1 receive channel (600/900 ohms) TERM to the **LINE BRDG** front panel jack.
4. Using the appropriate test cable and test clips, connect the TIMS #2 receive channel clip leads (600 ohms BRDG) to the AGND test point and the RX BAL test point.
5. Rotate S2 (HYBRID BALANCE) until the minimum level is obtained on the TIMS #2. For S2 location, see **Figure A-6**.
6. Adjust R65 until the minimum level is obtained on the TIMS #2. For R65 location, see **Figure A-6**.
7. Referring to **Table 6-51**, locate, in the 'Transmit Path—Site-specific TL Level' column, the site-specific TL value. Adjust the **XMT ADJ** potentiometer until the corresponding level from the 'Transmit Path—LINE BRDG' column is obtained (±0.5 dB).

c) Real Line Balancing

The ASU line card to be aligned must now be connected to the external phone line with which it will be associated in normal operation at the site and balanced to that line.

1. Disconnect all test cables.
2. Restore the original setting of the device-type switch (S1).
3. Reboot the card by removing the card with the extender, then reinserting.
4. Restore demarc clips (if necessary).
5. At a position, select the interface that is being aligned and perform either step 5a or 5b, as appropriate.
   a. (Circuits with dial access) At the operator position, place a call to another position. Answer the call, then remove the handset to eliminate audio on the receive circuit of the ASU interface under test.
   b. (Circuits without dial access) Coordinate with site where line terminates to answer call; remove handset to eliminate audio on receive circuit of the ASU interface under test.
6. Connect the TIMS send channel to the IMTA, then plug IMTA into the INSTRUCTOR (or TRAINEE) jack of the calling position.
7. Adjust the output level on TIMS to –10.0 dBm at 1004 Hz.
8. Connect TIMS receive channel clip leads (600 ohms BRDG) to the AGND and RX BAL test points.
9. Rotate S2 hex switch through all of its positions until the minimum level is obtained on the TIMS. (NOTE: S2 has four positions –C71, C73, C72, C74).
10. Slowly adjust R65 (located between S3 and S4) until the minimum level is obtained on the TIMS.
11. Re-check level for the value previously obtained in step b)7 of the Balancing and Transmit Level procedure. If necessary, readjust the XMT ADJ potentiometer.

#### 6.6.5.4.3 Card Replacement

If the ASU Telephone Interface card fails to align properly in any of the foregoing procedures, replace with a new card; see removal/replacement procedures of paragraph 6.5.3. Align replacement card per above procedures before placing into operation.

#### 6.6.5.4.4 Placing Card Back Into Operation

If the previous steps have all been completed successfully, perform the following steps:

1. Disconnect all test cables.
2. Remove card from extender.
3. Remove extender card.
4. Restore original setting of device-type switch (S1).
5. Reinstall card (i.e., slide the card back into its card cage slot and push all the way in so that the card is firmly secured in its edge connector). This action restores card state to original operation.
6. Restore demarc clips (if necessary).

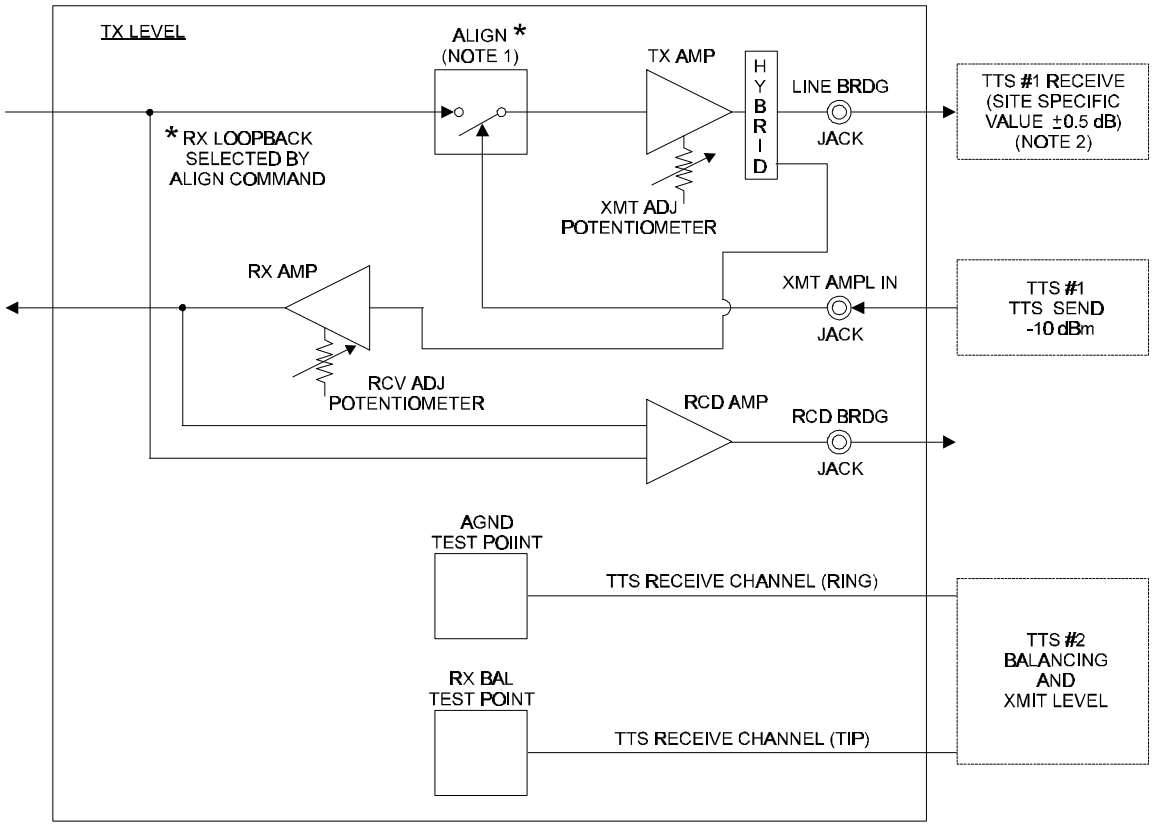


NOTES:
1. CONTROL LOGIC VIA HEX SWITCH (POSITION 'F').
2. FOR BALANCING AND TRANSMIT LEVEL PROCEDURE.

TIB6-43C.CDR

***Figure 6-44a. ASU Interface Alignment Block Diagram (Balancing/Transmit Level Path)***

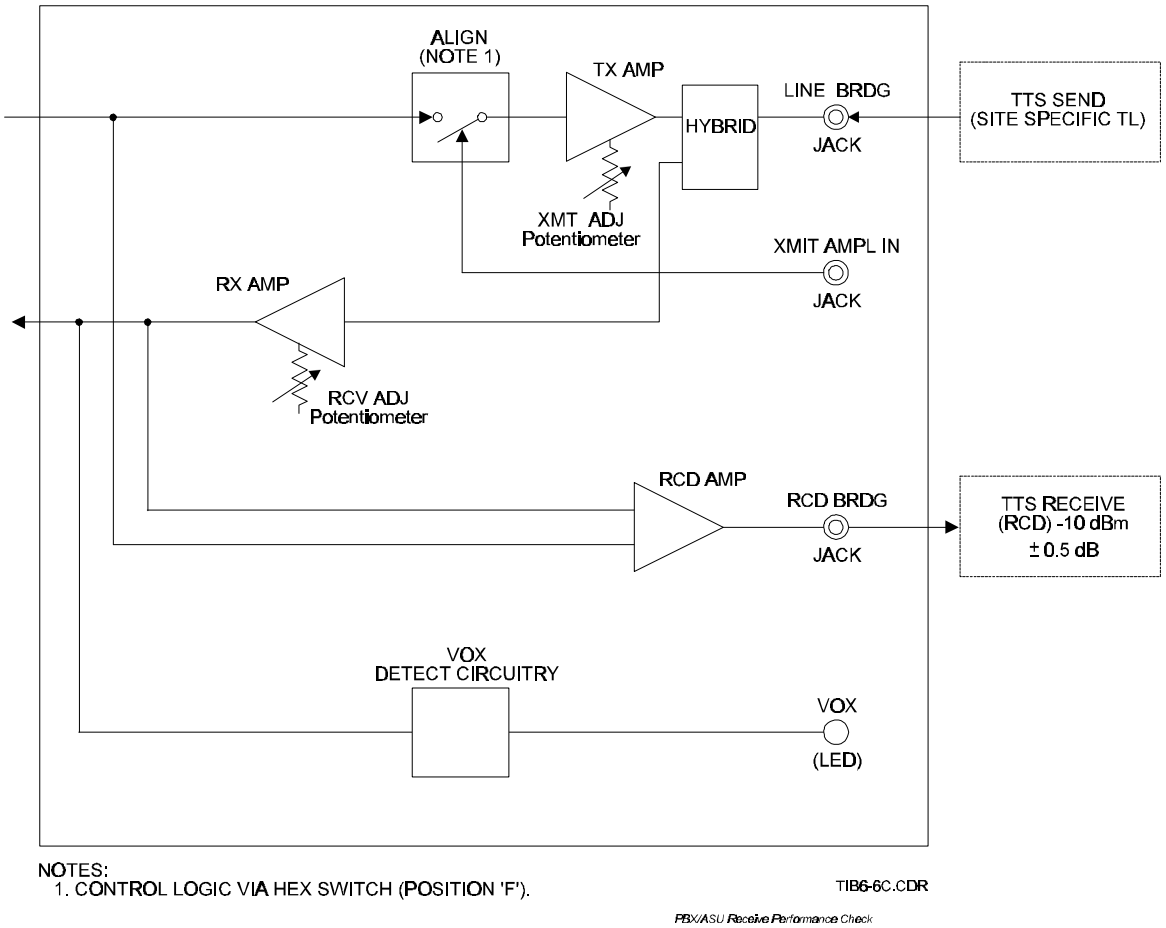


***Figure 6-44b. ASU Interface Alignment Block Diagram (Receive Path)***

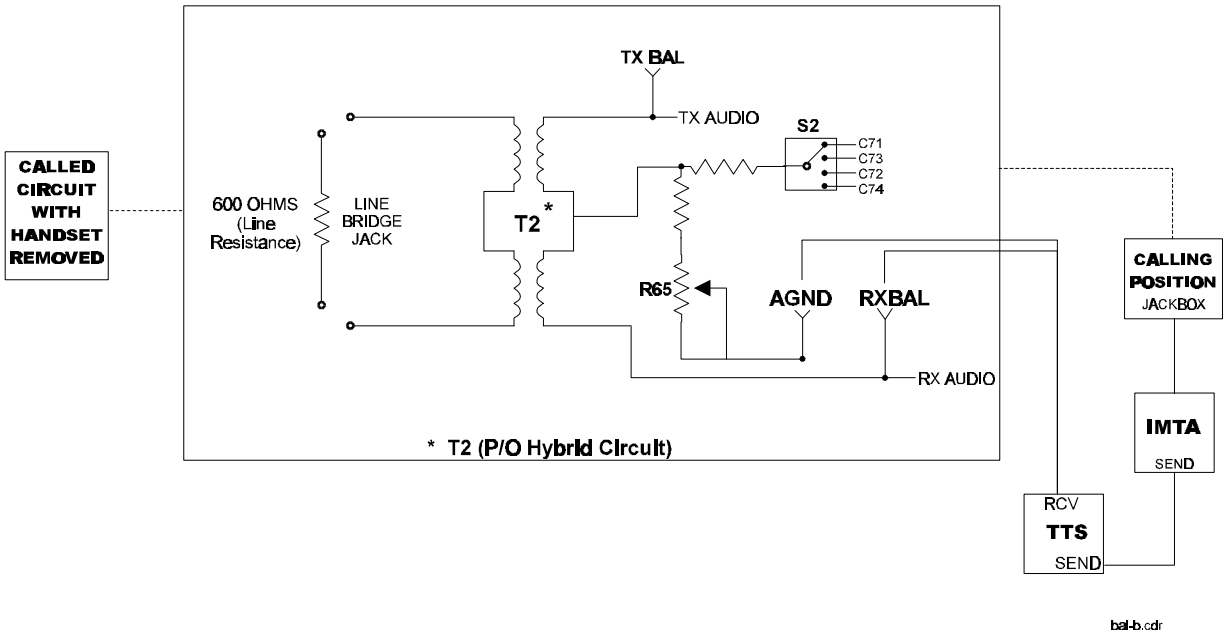


*Figure 6-44c. ASU Interface Alignment Block Diagram (On-Site [Real Line] Balancing)*

## *Table 6-51. ASU Interface Alignment Worksheet*

| RECEIVE PATH | | | TRANSMIT PATH | | |
|---|---|---|---|---|---|
| Site-Specific TL level | LINE BRDG Input (dBm) | RCD BRDG* (RCRD) (dBm) | Site-Specific TL level | XMT AMPL IN ** Input (dBm) | LINE BRDG (dBm) |
| +12 | +2 | -10 | +12 | -10 | +2 |
| +11 | +1 | -10 | +11 | -10 | +1 |
| +10 | 0 | -10 | +10 | -10 | 0 |
| +9 | -1 | -10 | +9 | -10 | -1 |
| +8 | -2 | -10 | +8 | -10 | -2 |
| +7 | -3 | -10 | +7 | -10 | -3 |
| +6 | -4 | -10 | +6 | -10 | -4 |
| +5 | -5 | -10 | +5 | -10 | -5 |
| +4 | -6 | -10 | +4 | -10 | -6 |
| +3 | -7 | -10 | +3 | -10 | -7 |
| +2 | -8 | -10 | +2 | -10 | -8 |
| +1 | -9 | -10 | +1 | -10 | -9 |
| 0 TL | -10 | -10 | 0 TL | -10 | -10 |
| -1 | -11 | -10 | -1 | -10 | -11 |
| -2 | -12 | -10 | -2 | -10 | -12 |
| -3 | -13 | -10 | -3 | -10 | -13 |
| -4 | -14 | -10 | -4 | -10 | -14 |
| -5 | -15 | -10 | -5 | -10 | -15 |
| -6 | -16 | -10 | -6 | -10 | -16 |
| -7 | -17 | -10 | -7 | -10 | -17 |
| -8 | -18 | -10 | -8 | -10 | -18 |
| -9 | -19 | -10 | -9 | -10 | -19 |
| -10 | -20 | -10 | -10 | -10 | -20 |
| -11 | -21 | -10 | -11 | -10 | -21 |
| -12 | -22 | -10 | -12 | -10 | -22 |
| -13 | -23 | -10 | -13 | -10 | -23 |
| -14 | -24 | -10 | -14 | -10 | -24 |
| -15 | -25 | -10 | -15 | -10 | -25 |
| -16 | -26 | -10 | -16 | -10 | -26 |

* Adjust RCV ADJ potentiometer until a reading of -10 dBm ±0.5 dB is obtained.

** Adjust XMT ADJ potentiometer until the level in Column 3 is within ±0.5 dB of the level in Column 2.

### 6.6.5.5 E&M Telephone Interface

CAUTION

Before undertaking these procedures, ensure that the associated communications channel is idle. Otherwise, disruption or interruption of communications will occur.

NOTE

All tests must be performed with the input and output circuits disconnected from any active telephone circuit. Remove demarc clips, if necessary.

#### 6.6.5.5.1 Test Equipment and Setup

**Figure 6-45a** presents a simplified diagram covering the transmit path of the alignment; **Figure 6-45b** provides a similar diagram for the receive path.

a) Equipment

Card audio alignment requires the following equipment:

- Small flat-tip screwdriver or alignment tool (GC Electronics ‘Combination Aligner…’ Cat. #8275 or equivalent)
- Test cables
- HP TIMS 4934A (or equivalent TTS)

b) Setup (see **Table 6-52**)

***Table 6-52. E&M Audio Alignment Setup***

| AUDIO ALIGNMENT SETUP | TIMS |
|---|---|
| Level | Site-dependent (see **Table 6-53**) |
| Frequency | 1004 Hz |
| Impedance | 600 ohms |
| Terminated/Bridged Connection | Terminated |

**NOTE:** Refer to **Table 5-13** for site-specific jumper/strapping settings.

6.6.5.5.2 Alignment Procedure

1. Remove demarc clips (if necessary).
2. Remove card to be aligned.
3. Note the current position of the device-type rotary switch (S1) installed on card. This setting will be restored when alignment has been completed.
4. Using the alignment tool, set the device-type rotary switch to ‘F.’ This places the card into **alignment** mode.
5. Reinstall card in slot.

NOTE

Insertion of card into slot enables card changed state to be recognized.

6. Perform the following adjustments and checks.

a) Receive Level

1. Set the TIMS for 600 ohms terminated.
2. Referring to **Table 6-53**, locate, in the ‘Receive Path—Site-specific TL Level’ column, the site-specific TL value. Set the TIMS output per the level given in the ‘RCV BRDG Input (dBm)’ column that corresponds to the site-specific TL level. Set the frequency on the TIMS to 1004 Hz.
3. Connect the TIMS send channel to the **RCV BRDG** front panel jack.
4. Connect the TIMS receive channel to the **RCD BRDG** front panel jack.
5. Adjust the **RCV ADJ** potentiometer until a reading of -10 dBm ±0.5 dB is obtained on the TIMS.

b) Transmit Level

1. Set the TIMS for 600 ohms terminated.
2. Set the output level to -10 dBm at 1004 Hz.
3. Connect the TIMS send channel to the **RCV BRDG** front panel jack.
4. Connect the TIMS receive channel to the **XMT BRDG** front panel jack.
5. Referring to **Table 6-53**, locate, in the ‘Transmit Path—Site-specific TL Level’ column, the site-specific TL value. Adjust the **XMT ADJ** potentiometer until the corresponding level from the ‘Transmit Path—XMT BRDG’ column is obtained (±0.5 dB).

#### 6.6.5.5.3 Card Replacement

If the E&M card fails to align properly in any of the foregoing procedures, replace with a new card; see removal/replacement procedures of paragraph 6.5.3. Align replacement card per above procedures before placing into operation.

#### 6.6.5.5.4 Placing Card Back Into Operation

If the previous steps have all been completed successfully, perform the following steps:

1. Disconnect all test cables.
2. Remove card from slot.
3. Restore original setting of device-type rotary switch (S1).
4. Reinstall card (i.e., slide the card back into its card cage slot and push all the way in so that the card is firmly secured in the edge connector). This action restores card state to original operation.
5. Restore demarc clips (if necessary).

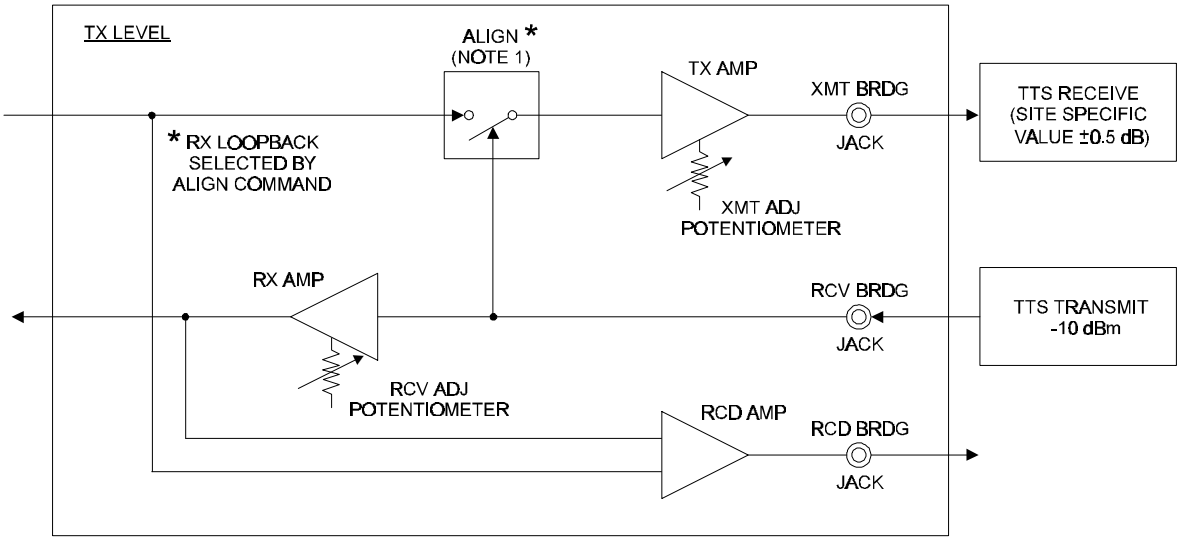


NOTES:
1. CONTROL LOGIC VIA HEX SWITCH (POSITION 'F').

***Figure 6-45a. E&M Alignment Block Diagram (Transmit Path)***

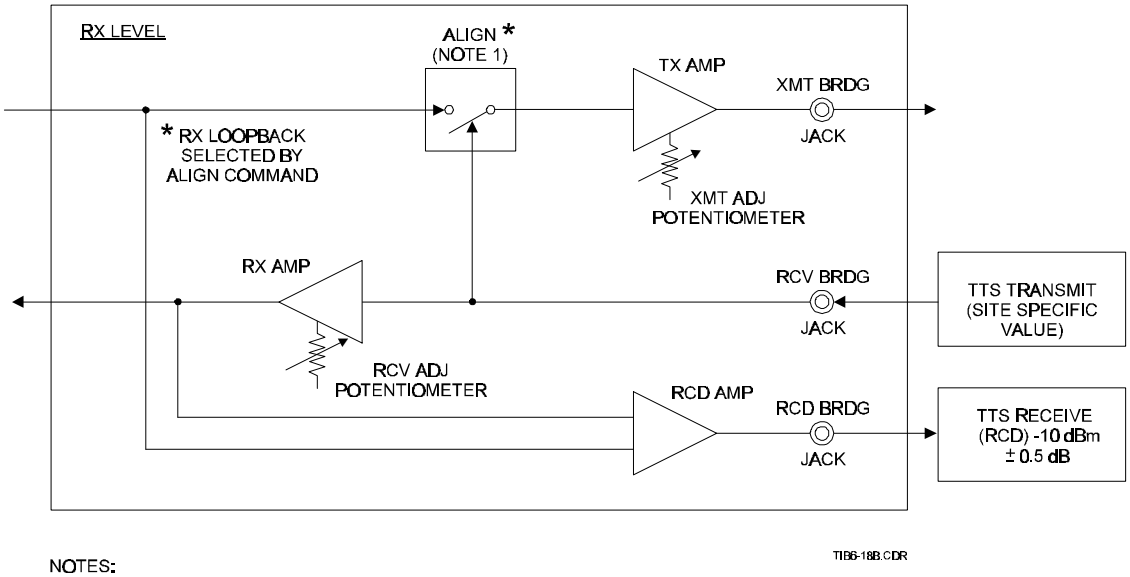


NOTES:
1. CONTROL LOGIC VIA HEX SWITCH (POSITION 'F').

***Figure 6-45b. E&M Alignment Block Diagram (Receive Path)***

## *Table 6-53. E&M Alignment Worksheet*

| RECEIVE PATH | | | TRANSMIT PATH | | |
|---|---|---|---|---|---|
| Site-Specific TL level | RCV BRDG Input (dBm) | RCD BRDG* (RCRD) (dBm) | Site-Specific TL level | RCV BRDG** Input (dBm) | XMIT BRDG (dBm) |
| +12 | +2 | -10 | +12 | -10 | +2 |
| +11 | +1 | -10 | +11 | -10 | +1 |
| +10 | 0 | -10 | +10 | -10 | 0 |
| +9 | -1 | -10 | +9 | -10 | -1 |
| +8 | -2 | -10 | +8 | -10 | -2 |
| +7 | -3 | -10 | +7 | -10 | -3 |
| +6 | -4 | -10 | +6 | -10 | -4 |
| +5 | -5 | -10 | +5 | -10 | -5 |
| +4 | -6 | -10 | +4 | -10 | -6 |
| +3 | -7 | -10 | +3 | -10 | -7 |
| +2 | -8 | -10 | +2 | -10 | -8 |
| +1 | -9 | -10 | +1 | -10 | -9 |
| 0 TL | -10 | -10 | 0 TL | -10 | -10 |
| -1 | -11 | -10 | -1 | -10 | -11 |
| -2 | -12 | -10 | -2 | -10 | -12 |
| -3 | -13 | -10 | -3 | -10 | -13 |
| -4 | -14 | -10 | -4 | -10 | -14 |
| -5 | -15 | -10 | -5 | -10 | -15 |
| -6 | -16 | -10 | -6 | -10 | -16 |
| -7 | -17 | -10 | -7 | -10 | -17 |
| -8 | -18 | -10 | -8 | -10 | -18 |
| -9 | -19 | -10 | -9 | -10 | -19 |
| -10 | -20 | -10 | -10 | -10 | -20 |
| -11 | -21 | -10 | -11 | -10 | -21 |
| -12 | -22 | -10 | -12 | -10 | -22 |
| -13 | -23 | -10 | -13 | -10 | -23 |
| -14 | -24 | -10 | -14 | -10 | -24 |
| -15 | -25 | -10 | -15 | -10 | -25 |
| -16 | -26 | -10 | -16 | -10 | -26 |

* Adjust RCV ADJ potentiometer until a reading of -10 dBm ±0.5 dB is obtained.

** Adjust XMT ADJ potentiometer until the level in Column 3 is within ±0.5 dB of the level in Column 2.

### 6.6.5.6 SS-1/SS-4 Interface

CAUTION

Before undertaking these procedures, ensure that the associated communications channel is idle. Otherwise, disruption or interruption of communications will occur.

CAUTION

This card contains ESD-sensitive devices. Use proper handling at all times.

NOTE

All tests must be performed with the input and output circuits disconnected from any active telephone circuit. Remove demarc clips, if necessary.

#### 6.6.5.6.1 Test Equipment and Setup

**Figure 6-46a** presents a simplified diagram covering the transmit path of the alignment; **Figure 6-46b** provides a similar diagram for the receive path.

a) Equipment

Card audio alignment requires the following equipment:

- Small flat-tip screwdriver or alignment tool (GC Electronics ‘Combination Aligner…’ Cat. #8275 or equivalent)
- Test cables
- HP TIMS 4934A (or equivalent TTS)

b) Setup (see **Table 6-54**)

***Table 6-54. SS-1/SS-4 Audio Alignment Setup***

| AUDIO ALIGNMENT SETUP | TIMS |
|---|---|
| Level | Site-dependent (see **Table 6-55**) |
| Frequency | 1004 Hz |
| Impedance | 600 ohms |
| Terminated/Bridged Connection | Terminated |

6.6.5.6.2 Alignment Procedure

1. Remove demarc clips (if necessary).
2. Remove card to be aligned.
3. Note the current position of the device-type rotary switch (S1) installed on card. This setting will be restored when alignment has been completed.
4. Using the alignment tool, set the device-type rotary switch to ‘F.’ This places the card into **alignment** mode.
5. Reinstall card in slot.

NOTE

Insertion of card into slot enables card changed state to be recognized.

6. Perform the following adjustments and checks.

a) Receive Level

1. Set the TIMS for 600 ohms terminated.
2. Referring to **Table 6-55**, locate, in the ‘Receive Path—Site-specific TL Level’ column, the site-specific TL value. Set the TIMS output per the level given in the ‘RCV BRDG Input (dBm)’ column that corresponds to the site-specific TL level. Set the frequency on the TIMS to 1004 Hz.
3. Connect the TIMS send channel to the **RCV BRDG** front panel jack.
4. Connect the TIMS receive channel to the **RCD BRDG** front panel jack.
5. Adjust the **RCV ADJ** potentiometer until a reading of -10 dBm ±0.5 dB is obtained on the TIMS.

b) Transmit Level

1. Set the TIMS for 600 ohms terminated.
2. Set the output level to -10 dBm at 1004 Hz.
3. Connect the TIMS send channel to the **RCV BRDG** front panel jack.
4. Connect the TIMS receive channel to the **XMT BRDG** front panel jack.
5. Referring to **Table 6-55**, locate, in the 'Transmit Path—Site-specific TL Level' column, the site-specific TL value. Adjust the **XMT ADJ** potentiometer until the corresponding level from the 'Transmit Path—XMT BRDG' column is obtained (±0.5 dB).

#### 6.6.5.6.3 Card Replacement

If the SS-1/SS-4 card fails to align properly in any of the foregoing procedures, replace with a new card; see removal/replacement procedures of paragraph 6.5.3. Align replacement card per above procedures before placing into operation.

#### 6.6.5.6.4 Placing Card Back Into Operation

If the previous steps have all been completed successfully, perform the following steps:

1. Disconnect all test cables.
2. Remove card from slot.
3. Restore original setting of device-type rotary switch (S1).
4. Reinstall card (i.e., slide the card back into the card cage slot and push all the way in so that the card is firmly secured in its edge connector). This action restores card state to original operation.
5. Restore demarc clips (if necessary).

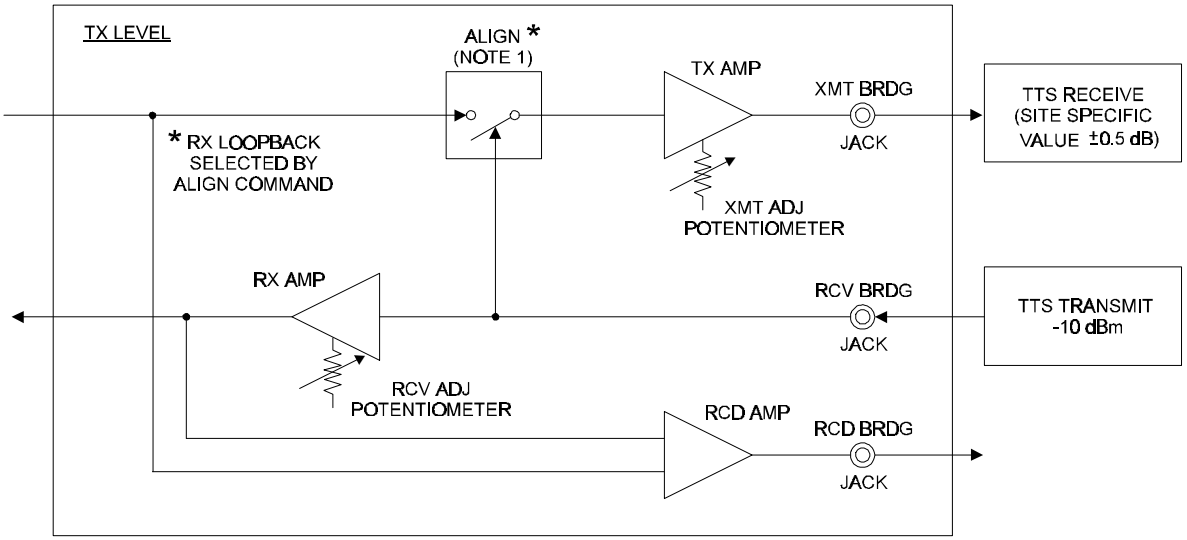


NOTES:
1. CONTROL LOGIC VIA HEX SWITCH (POSITION 'F').

TIB6-19A.CDR

***Figure 6-46a. SS-1/SS-4 Alignment Block Diagram (Transmit Path)***

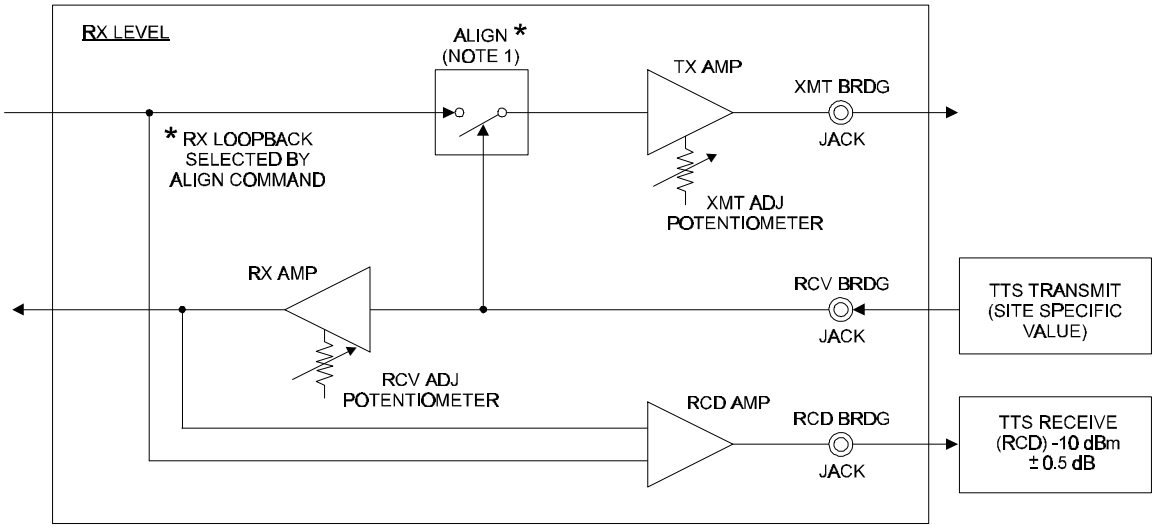


NOTES:
1. CONTROL LOGIC VIA HEX SWITCH (POSITION 'F').

TIB6-19B.CDR

***Figure 6-46b. SS-1/SS-4 Alignment Block Diagram (Receive Path)***

## *Table 6-55. SS-1/SS-4 Alignment Worksheet*

| RECEIVE PATH | | | TRANSMIT PATH | | |
|---|---|---|---|---|---|
| Site-Specific TL level | RCV BRDG Input (dBm) | RCD BRDG* (RCRD) (dBm) | Site-Specific TL level | RCV BRDG** Input (dBm) | XMIT BRDG (dBm) |
| +12 | +2 | -10 | +12 | -10 | +2 |
| +11 | +1 | -10 | +11 | -10 | +1 |
| +10 | 0 | -10 | +10 | -10 | 0 |
| +9 | -1 | -10 | +9 | -10 | -1 |
| +8 | -2 | -10 | +8 | -10 | -2 |
| +7 | -3 | -10 | +7 | -10 | -3 |
| +6 | -4 | -10 | +6 | -10 | -4 |
| +5 | -5 | -10 | +5 | -10 | -5 |
| +4 | -6 | -10 | +4 | -10 | -6 |
| +3 | -7 | -10 | +3 | -10 | -7 |
| +2 | -8 | -10 | +2 | -10 | -8 |
| +1 | -9 | -10 | +1 | -10 | -9 |
| 0 TL | -10 | -10 | 0 TL | -10 | -10 |
| -1 | -11 | -10 | -1 | -10 | -11 |
| -2 | -12 | -10 | -2 | -10 | -12 |
| -3 | -13 | -10 | -3 | -10 | -13 |
| -4 | -14 | -10 | -4 | -10 | -14 |
| -5 | -15 | -10 | -5 | -10 | -15 |
| -6 | -16 | -10 | -6 | -10 | -16 |
| -7 | -17 | -10 | -7 | -10 | -17 |
| -8 | -18 | -10 | -8 | -10 | -18 |
| -9 | -19 | -10 | -9 | -10 | -19 |
| -10 | -20 | -10 | -10 | -10 | -20 |
| -11 | -21 | -10 | -11 | -10 | -21 |
| -12 | -22 | -10 | -12 | -10 | -22 |
| -13 | -23 | -10 | -13 | -10 | -23 |
| -14 | -24 | -10 | -14 | -10 | -24 |
| -15 | -25 | -10 | -15 | -10 | -25 |
| -16 | -26 | -10 | -16 | -10 | -26 |

* Adjust RCV ADJ potentiometer until a reading of -10 dBm ±0.5 dB is obtained.

** Adjust XMT ADJ potentiometer until the level in Column 3 is within ±0.5 dB of the level in Column 2.

### 6.6.5.7 Cluster MUX Unit (CMU) (Strapping Procedure only)

To ensure proper system operation, card strapping must be set up before introduction into the system.

CAUTION

Before undertaking these procedures, ensure that there is a main or standby CMU which will assume control. Otherwise, disruption or interruption of communications will occur.

CAUTION

This card contains ESD-sensitive devices. Use proper handling at all times.

#### 6.6.5.7.1 Test Equipment

Card strapping requires an alignment tool (GC Electronics ‘Combination Aligner...’ Cat. #8275 or equivalent).

#### 6.6.5.7.2 Strapping Information

1. Remove card to be checked/strapped.
2. Set the strapping jumpers as shown below.
   a) ETVS Default

      **Table 6-56** below lists the default jumper settings for normal operation.

***Table 6-56. ETVS Default Jumper Settings (CMU)***

| SWITCH | SETTING |
|---|---|
| S1 | 0 |

| JUMPER | SETTING |
|---|---|
| W2 | 1 to 2 |
| W3 | 1 to 2 |

b) Site-Specific Jumper Settings

**Table 6-57** below lists jumpers whose settings may vary from site to site and from one card cage to another. The default settings used for ETVS are also indicated.

***Table 6-57. CMU Site-Specific Jumper Settings***

| JUMPER | STRAPPING | OPTIONS |
|---|---|---|
| W5 | 1 to 2 | Stream Selection:<br>1 to 2: Cluster Bus 9<br>2 to 3: PCM Highway 2 (up-link) |
| W6 | 1 to 2 | Stream Selection:<br>1 to 2: Cluster Bus B (Differential)<br>2 to 3: PCM Highway 4 (single-ended) |
| W7 | 1 to 2 | Stream Selection:<br>1 to 2: Cluster Bus C (Differential)<br>2 to 3: PCM Highway 2 (single-ended) |
| W9 | 1 to 2 | Stream Selection:<br>1 to 2: Cluster Bus A (Differential)<br>2 to 3: PCM Highway 3 (single-ended) |
| W10 | 1 to 2 | Stream Selection:<br>1 to 2: Cluster Bus E (Differential)<br>2 to 3: PCM Highway 4 (single-ended) |
| W11 | 1 to 2 | Stream Selection:<br>1 to 2: Cluster Bus D (Differential)<br>2 to 3: PCM Highway 3 (single-ended) |

**NOTE:** W5 through W7 and W9 through W11 are factory pre-set per system configuration and are not site-specific. Settings are provided for reference only. **Table 5-3** provides a complete list of CMU jumpers.

**NOTE:** W1, W15 reference designators are assigned to stiffeners. Jumpers W4, W8, and W12 through W14 are not used.

### 6.6.5.7.3 Placing Card Back Into Operation

Reinstall card (i.e., slide the card back into its card cage slot and push all the way in so that card is firmly secured in its edge connector).

### 6.6.5.8 Maintenance Access Card (Strapping Procedure only)

To ensure proper system operation, correct switch settings and jumper strapping must be selected.

CAUTION

Before undertaking these procedures, ensure that the associated communications channel is idle. Otherwise, disruption or interruption of communications will occur.

CAUTION

This card contains ESD-sensitive devices. Use proper handling procedures at all times.

NOTE

All tests must be performed with the input and output circuits disconnected from any active telephone circuit. Remove demarc clips, if necessary.

#### 6.6.5.8.1 Test Equipment

Card strapping requires an alignment tool (GC Electronics ‘Combination Aligner...’ Cat. #8275 or equivalent).

#### 6.6.5.8.2 Strapping Information

1. Remove card to be checked/strapped.
2. Using the alignment tool, set the switches and strapping jumpers as shown below.

a) ETVS Default

**Table 6-58** below lists the default jumper settings for normal operation.

***Table 6-58. ETVS Default Jumper Settings (Maintenance Access Unit)***

| SWITCH | SETTING |
|---|---|
| S2 | 0 |

| JUMPER | SETTING |
|---|---|
| W2, W3 | 1 to 2 |
| W4, W5 | 1 to 2 |
| W6, W7, W9, W11–16, W19 | not installed |
| W17 | 1 to 2 (channels 16-31)<br>2 to 3* (channels 0-15)<br>(setting dependent on S2) |
| W18 | 1 to 2* |
| W20 | 1 to 2* |
| W21 | 1 to 2* |

* Default setting

**NOTE: Table 5-17** contains a listing of all jumpers/switch settings. W1 and W10 reference designators are assigned to stiffeners; W8 not used.

b) Site-Specific Jumper Settings

There are no site-specific jumper or switch settings.

6.6.5.8.3 Placing Card Back Into Operation

Reinstall card (i.e., slide card back into its card cage slot and push all the way in so that the card is firmly secured in its edge connector).

### 6.6.5.9 Timing MUX Unit (Strapping Procedure only)

To ensure proper system operation, card strapping must be set up before introduction into the system.

CAUTION

Before undertaking these procedures, ensure that there is a main or standby CMU which will assume control. Otherwise, disruption or interruption of communications will occur.

CAUTION

This card contains ESD-sensitive devices. Use proper handling at all times.

6.6.5.9.1 Test Equipment

Card strapping requires an alignment tool (GC Electronics 'Combination Aligner...' Cat. #8275 or equivalent).

6.6.5.9.2 Strapping Procedure

1. Remove card to be checked/strapped.
2. Using the alignment tool, set the strapping jumpers as shown below.
   a) ETVS Default

      **Table 6-59** below lists the default jumper settings for normal operation.

***Table 6-59. ETVS Default Jumper Settings (TMU)***

| SWITCH | SETTING |
|---|---|
| S1 | 0 |

| JUMPER | SETTING |
|---|---|
| W12 * | 1 to 2 |
| W13 * | 1 to 2 |

***** W12 is watchdog enabled; W13 is watchdog timeout (1200 ms).

   b) Site-Specific Jumper Settings

      **Table 6-60** lists jumpers whose settings may vary from site to site and from one card cage to another. The default settings used for ETVS are also indicated.

***Table 6-60. TMU Site-Specific Jumper Settings***

| JUMPER | STRAPPING | OPTIONS |
|---|---|---|
| W2 | 1 to 2 | Stream Selection:<br>1 to 2: Differential Cluster 9<br>2 to 3: Single-ended or PCM Highway 2 |
| W3 | 1 to 2 | Stream Selection:<br>1 to 2: Differential Cluster A<br>2 to 3: PCM Highway 3 (single-ended) |
| W4 | 1 to 2 | Stream Selection:<br>1 to 2: Differential Cluster B<br>2 to 3: PCM Highway 4 (single-ended) |
| W5 | 1 to 2 | Stream Selection:<br>1 to 2: Differential Cluster C<br>2 to 3: PCM Highway 2 (single-ended) |
| W6 | 1 to 2 | Stream Selection:<br>1 to 2: Differential Cluster D<br>2 to 3: PCM Highway 3 (single-ended) |
| W7 | 1 to 2 | Stream Selection:<br>1 to 2: Differential Cluster E<br>2 to 3: PCM Highway 4 (single-ended) |

**NOTE:** W1 and W4 reference designators are assigned to stiffeners. Jumpers W8 through W11, W15 are not installed. **Table 5-2** contains a complete listing of all jumper/switch settings.

**NOTE:** W2 through W7 are factory set—not field configurable. Settings are provided for reference only.

CAUTION

Any change to the jumper or switch settings may have an adverse impact on CCA system operation.

6.6.5.9.3 Placing Card Back Into Operation

Reinstall card (i.e., slide the card back into its card cage slot and push all the way in so that the card is firmly secured in the edge connector).

### 6.6.5.10 Remote Radio Processor

CAUTION

Before undertaking these procedures, ensure that the associated communications channel is idle. Otherwise, disruption or interruption of communications will occur.

#### 6.6.5.10.1 Test Equipment and Setup

**Figure 6-47a** presents a simplified diagram covering the transmit path of the alignment; **Figure 6-47b** provides a similar diagram for the receive path.

a) Equipment

Card audio alignment requires the following equipment:

- Small flat-tip screwdriver or alignment tool (GC Electronics ‘Combination Aligner…’ Cat. #8275 or equivalent)
- Test cables
- HP TIMS 4934A (or equivalent TTS)

b) Setup (see **Table 6-61**)

***Table 6-61. Remote Radio Processor Audio Alignment Setup***

| AUDIO ALIGNMENT SETUP | TIMS |
|---|---|
| Level | Site-dependent (see **Table 6-62**) |
| Frequency | 1004 Hz |
| Impedance | 600 ohms |
| Terminated/Bridged Connection | Terminated |

**NOTE:** For site-specific jumper/strapping settings, refer to **Table 5-20**.

#### 6.6.5.10.2 Alignment Procedure

1. Remove demarc clips (if necessary).
2. Note the current position of the DIGN front panel device-type rotary switch (S5). This setting will be restored when alignment has been completed.
3. Using the alignment tool, set the DIGN front panel device-type rotary switch (S5) to ‘F.’ This places the card into **alignment** mode.
4. Press the front panel RESET button.
5. Perform the following adjustments and checks.

a) Receive Level

1. Set the TTS for 600 ohms terminated.
2. Referring to **Table 6-62**, locate, in the ‘Receive Path—Site-specific TL Level’ column, the site-specific TL value. Set the TIMS output per the

level given in the 'RCV BRDG Input (dBm)' column that corresponds to the site-specific TL level. Set the frequency on the TIMS to 1004 Hz.

3. Connect the TTS send (transmit) channel to the **RCV BRDG** front panel jack.
4. Connect the TTS receive channel to the **RCD** front panel jack.
5. Adjust the **RCV ADJ** potentiometer until a reading of -10 dBm ±0.5 dB is obtained on the TIMS.

b) Transmit Level

1. Set the **TTS** for 600 ohms terminated.
2. Set the output level to -10 dBm at 1004 Hz.
3. Connect the **TTS** send channel to the **RCV BRDG** front panel jack.
4. Connect the **TTS** receive channel to the **XMT BRDG** front panel jack.
5. Referring to **Table 6-62**, locate, in the 'Transmit Path—Site-specific TL Level' column, the site-specific TL value. Adjust the **XMT ADJ** potentiometer until the corresponding level from the 'Transmit Path—XMT BRDG' column is obtained (±0.5 dB).

#### 6.6.5.10.3 Card Replacement

If the Remote Radio Processor card fails to align properly in any of the foregoing procedures, replace with a new card; see removal/replacement procedures of paragraph 6.5.3. Align replacement card per above procedures before placing into operation.

#### 6.6.5.10.4 Placing Card Back Into Operation

If the previous steps have all been completed successfully, perform the following steps:

1. Disconnect all test cables.
2. Restore original setting of DIGN front panel device-type rotary switch (S5).
3. Press the RESET button.
4. Restore demarc clips (if necessary).

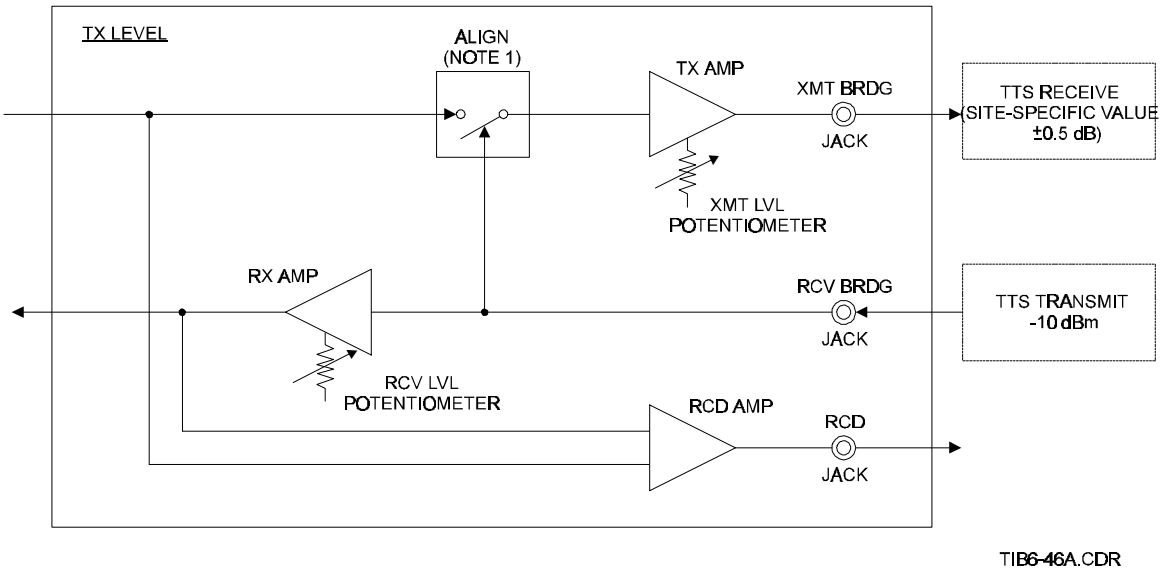


NOTES:
1. CONTROL LOGIC VIA HEX SWITCH (POSITION 'F').

***Figure 6-47a. Remote Radio Processor Alignment Block Diagram (Transmit Path)***

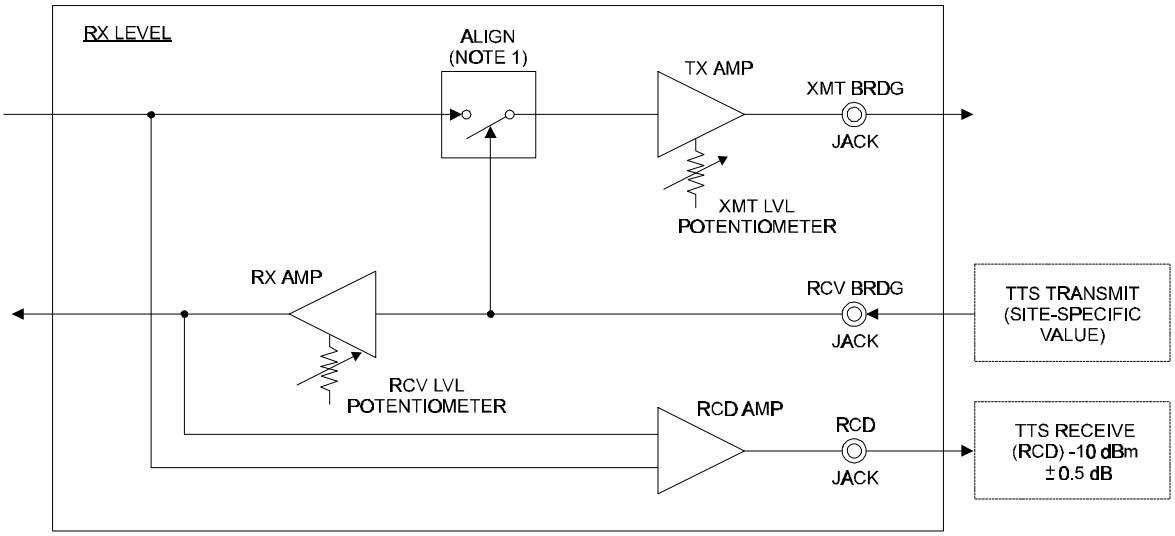


NOTES:
1. CONTROL LOGIC VIA HEX SWITCH (POSITION 'F').

TIB6-46B.CDR

***Figure 6-47b. Remote Radio Processor Alignment Block Diagram (Receive Path)***

## *Table 6-62. Remote Radio Processor Alignment Worksheet*

| RECEIVE PATH | | | TRANSMIT PATH | | |
|---|---|---|---|---|---|
| Site-Specific TL level | RCV BRDG Input (dBm) | RCD BRDG* (RCRD) (dBm) | Site-Specific TL level | RCV BRDG** Input (dBm) | XMIT BRDG (dBm) |
| +12 | +2 | -10 | +12 | -10 | +2 |
| +11 | +1 | -10 | +11 | -10 | +1 |
| +10 | 0 | -10 | +10 | -10 | 0 |
| +9 | -1 | -10 | +9 | -10 | -1 |
| +8 | -2 | -10 | +8 | -10 | -2 |
| +7 | -3 | -10 | +7 | -10 | -3 |
| +6 | -4 | -10 | +6 | -10 | -4 |
| +5 | -5 | -10 | +5 | -10 | -5 |
| +4 | -6 | -10 | +4 | -10 | -6 |
| +3 | -7 | -10 | +3 | -10 | -7 |
| +2 | -8 | -10 | +2 | -10 | -8 |
| +1 | -9 | -10 | +1 | -10 | -9 |
| 0 TL | -10 | -10 | 0 TL | -10 | -10 |
| -1 | -11 | -10 | -1 | -10 | -11 |
| -2 | -12 | -10 | -2 | -10 | -12 |
| -3 | -13 | -10 | -3 | -10 | -13 |
| -4 | -14 | -10 | -4 | -10 | -14 |
| -5 | -15 | -10 | -5 | -10 | -15 |
| -6 | -16 | -10 | -6 | -10 | -16 |
| -7 | -17 | -10 | -7 | -10 | -17 |
| -8 | -18 | -10 | -8 | -10 | -18 |
| -9 | -19 | -10 | -9 | -10 | -19 |
| -10 | -20 | -10 | -10 | -10 | -20 |
| -11 | -21 | -10 | -11 | -10 | -21 |
| -12 | -22 | -10 | -12 | -10 | -22 |
| -13 | -23 | -10 | -13 | -10 | -23 |
| -14 | -24 | -10 | -14 | -10 | -24 |
| -15 | -25 | -10 | -15 | -10 | -25 |
| -16 | -26 | -10 | -16 | -10 | -26 |

* Adjust RCV ADJ potentiometer until a reading of -10 dBm ±0.5 dB is obtained.

** Adjust XMT ADJ potentiometer until the level in Column 3 is within ±0.5 dB of the level in Column 2.

### 6.6.5.11 Remote Position Interface Unit (RPIU) Audio Alignment Procedure

#### 6.6.5.11.1 Background Information

Audio alignment is all that is necessary to assure proper system operation. No switches or jumpers are used.

Two pairs of the RPIU are used, each utilizing two versions of the RPIU. One pair consists of RPIUs P/N 110956-001 and 110956-002 for local and remote split positions, and 110956-003 and 110956-004 for local and remote non-split positions, respectively, One pair is used to interface normal (non-split) positions requiring a single ISDN link with a single legal audio recorder channel. The other pair is used to support split positions requiring dual ISDN links with dual legal audio recorder channels. Alignment for the remote RPIU assemblies (P/Ns 110956-002 and 110956-004) is not required. However, these two units have potentiometers that must be set for maximum gain. The following two subparagraphs describe this procedure.

The remote split position RPIU assembly (P/N 110956-002) has two potentiometers located on the rear of the unit, labeled PRI (primary) and SEC (secondary), which must be set for maximum gain. This is accomplished by turning PRI and SEC clockwise at least 25 times. These 25-turn potentiometers do not have mechanical stops for the adjustment screw to provide a full-scale indication.

The remote non-split RPIU assembly (P/N 110956-004) has one potentiometer located on the rear of the unit, labeled PRI (primary), which must be set for maximum gain (turn clockwise at least 25 times).

<u>Audio Alignment (P/N 110956-001 and 110956-003)</u>

Audio alignment is performed by adjusting the PRI potentiometer on the local non-split RPIU (P/N 110956-003) and PRI and SEC potentiometers on the local split RPIU (P/N 110956-001).

<u>CAUTION</u>

Before undertaking these procedures, ensure that the associated remote position is idle; otherwise, disruption or interruption of communications will occur.

CAUTION

This unit contains ESD-sensitive devices. Use proper handling at all times.

NOTE

For convenience in referencing the test position, the “position A” initially referred to in paragraph 6.6.5.11.3, step 4, is used so that later steps will refer to “position A” instead of remote position.

6.6.5.11.2 Test Equipment and Setup

See **Figure 6-48** for simplified diagram of test setup.

Card audio alignment requires the following equipment:

- Alignment tool (GC Electronics ‘Combination Aligner…’ Cat. #8275 or similar)
- HP TIMS 4934A (or equivalent TTS), two (2) required
- Impedance Matching Test Adapter (IMTA), DENRO P/N 110311-001, or equivalent
- An unused telephone interface card (SS-1/SS-4, CCA P/N 325929-001/ASSY P/N 120929-001 is preferred); this card must be aligned for use in this procedure.

6.6.5.11.3 Audio Alignment Procedure

1. Disconnect phone external connections at the demarcation.
2. Ensure that the remote RPIU has its potentiometer(s) set for maximum gain (see paragraph 6.6.5.11.1 for information on potentiometer settings).
3. Connect TTS #1’s transmit audio to the telephone card’s demarc RX input connection point. Set the TTS output for a -10-dBm0, 1004 Hz.

NOTE

The TTS output is set relative to the TL level of the telephone card’s RCV BRDG input. Use the TL level value required for your site.

Disconnect the phone from the external circuits at the demarcation.

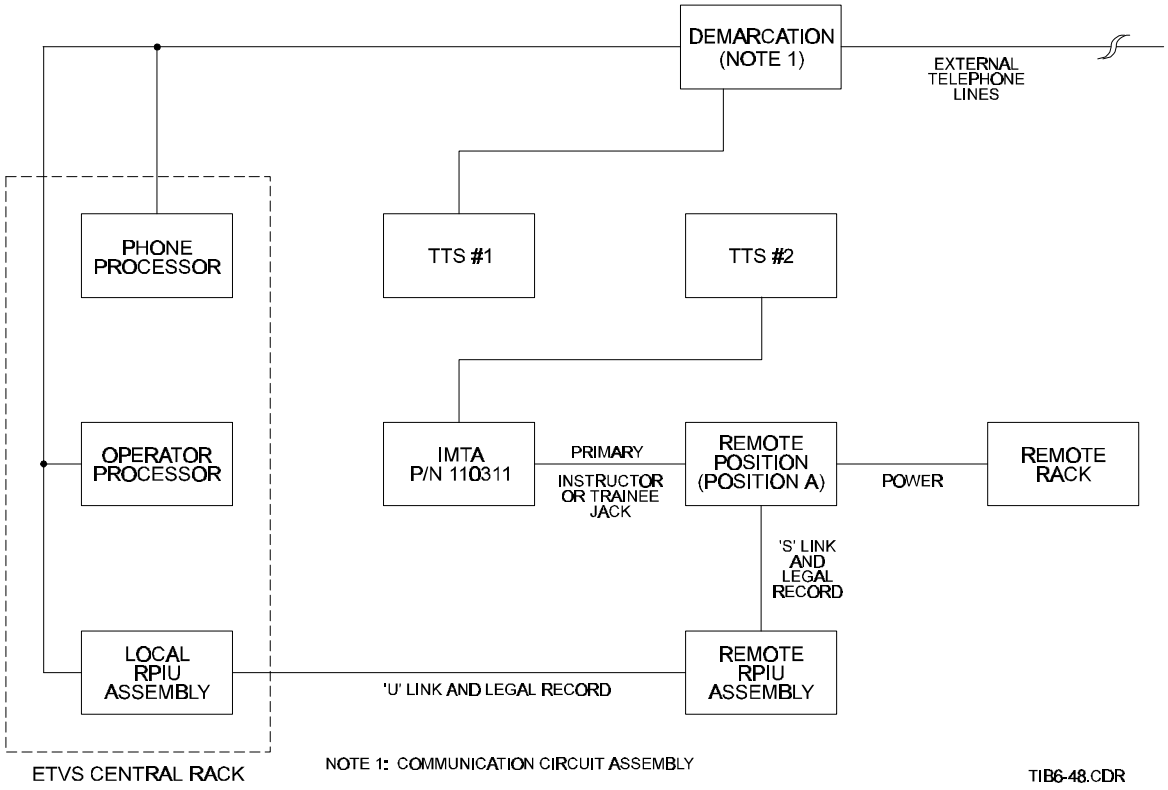


***Figure 6-48. RPIU Audio Alignment Block Diagram***

NOTE

The external circuits are the telephone line or the transmitter and receiver connections to the telephone or the radio card, respectively.

4. Connect the IMTA to the remote position's (position A) primary instructor (or primary trainee) jack. Remove any other headsets/handsets at position A.
5. Connect TTS #2's receive audio to the IMTA.
6. Connect TTS #1's receive audio to the demarcation points for position A's primary legal record.
7. At position A, using an appropriate DA or IA key, select the phone. This will place the phone off-hook. If a dial tone is present, press any digit key on the keypad at position A.
8. At position A, adjust the primary instructor's (or primary trainee's) headset volume control so that position A receives the 1-kHz tone at a -26-dBm level (observed at TTS #2).
9. Adjust the local RPIU's primary (marked PRI) legal recorder audio gain so that the 1-kHz tone is present at the demarcation at a -10-dBm level (observed at TTS #1).
10. The primary legal record channel is now aligned. If aligning a non-split position, the procedure is completed; proceed to step 11.

Split Mode

11. Remove the IMTA from position A's primary instructor (or primary trainee) jack. Connect the IMTA to position A's secondary instructor (or secondary trainee) jack. Remove any other handsets.
12. Connect TTS #2's receive audio to the IMTA.
13. Connect TTS #1's receive audio to the demarcation points for position A's secondary legal record.
14. At position A, adjust the secondary instructor's (or secondary trainee's) headset volume control so that position A receives the 1004 Hz tone at -26 dBm level (observed at TTS #2).
15. Adjust the local (split mode) RPIU's secondary (marked SEC) legal recorder audio gain so that the 1004 Hz tone is present at the demarcation at a -10 dBm level (observed at TTS #1).

16. Disconnect test equipment. As necessary, restore demarc phone internal connections and operator position handsets.

## 6.7 CENTRAL RACK MAINTENANCE DIAGNOSTICS PROCEDURES

### 6.7.1 Diagnostics/Performance Checks

The purpose and scope of these tests are described in paragraph 6.3.3.10.

To test a selected ETVS operator position, the maintenance diagnostics procedures presented herein basically utilize the following components of the ETVS: the SCT/MCT, the Central Rack maintenance position equipment, including the maintenance speaker, and the maintenance access unit. See **Figure 6-49** which identifies important operational features of the TED (TRACON) maintenance position equipment. The two procedures involved are referred to on the respective MCT Diagnostic dialog boxes as the “Position Monitoring Test” or the “Position Loopback Test.” Each of these names is displayed as titled above its associated diagnostics dialog box on the MCT screen. Both diagnostics procedures should be set up and performed at the MCT position, using the SCT to select “Maintenance Busy” mode for the position to be tested.

NOTE

Maintenance busy is a device option (set up by the supervisor at the SCT) allowing a device to be reconfigured at the MCT. A device placed in Maintenance Busy mode can be tested and/or reconfigured by maintenance personnel without affecting the other on-line devices. If the SCT sends a global map, only the on-line devices will receive the map. In addition to reconfiguration capabilities, Maintenance Busy allows maintenance personnel to perform monitoring and loopback testing from a maintenance position to an operator position as configured in the MCT.

NOTE

When the Maintenance Busy loopback test is enabled, do not expect to use the affected position. There is no indication of Maintenance Busy at the position being tested; therefore, such testing must be properly coordinated by the supervisory personnel with ATC.

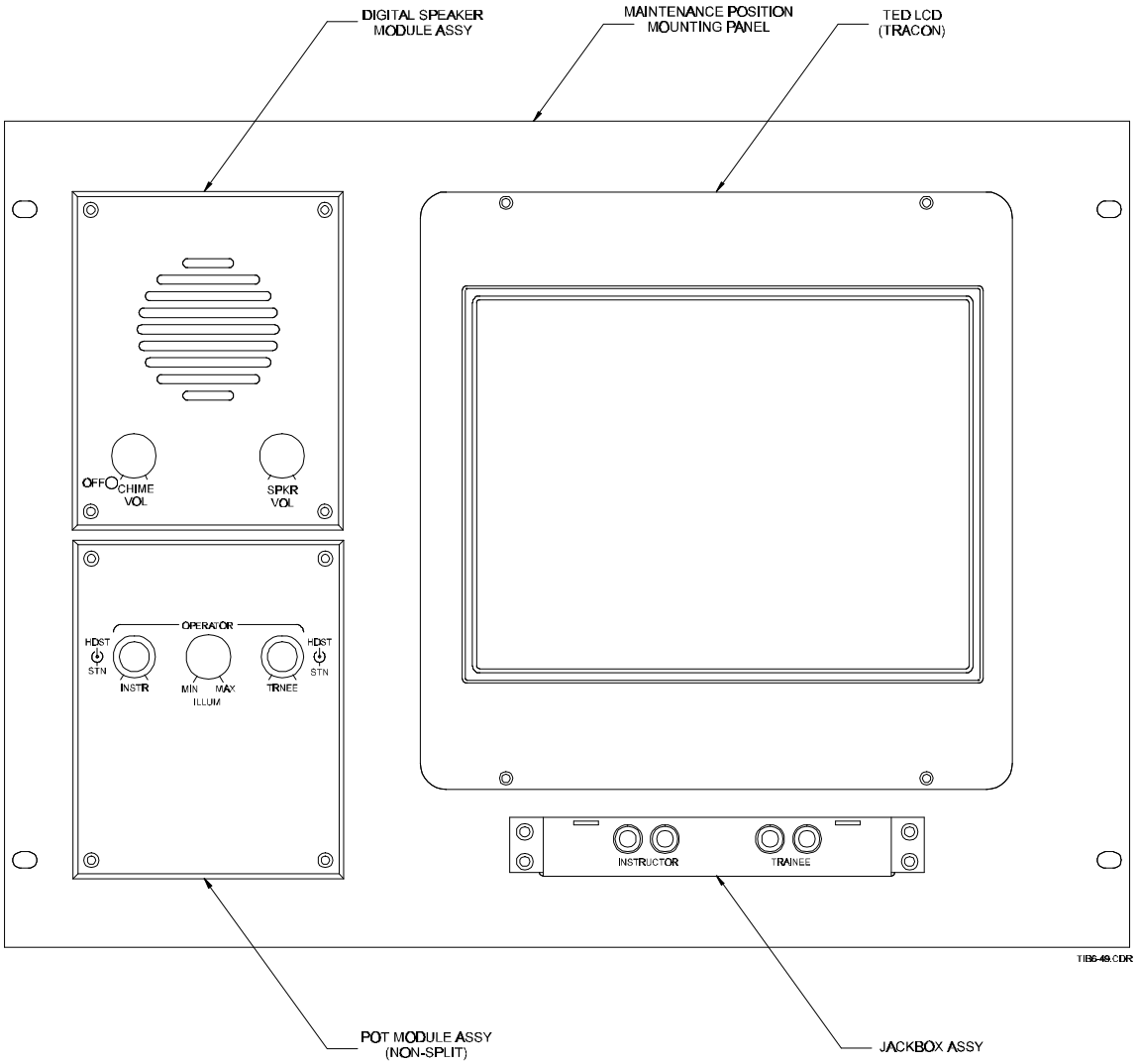


*Figure 6-49. Central Rack Maintenance Position Equipment (TRACON TED)*

By following the specific step-by-step procedures contained herein, the user can either: (a) select an operator equipment position for monitoring audio (tones) at the maintenance position and selected position headset or speaker audio devices, or (b) establish “Loopback” testing using the maintenance position to send a tone through selected paths of a “tested position” and back to the maintenance position to verify the validity of the digital and analog paths in the loops.

The maintenance speaker panel can be used (if made part of the loop) in both the maintenance position monitoring and position loopback test procedures. Also, in the monitoring procedure, a selected legal record audio channel can be patched from the appropriate Maintenance Access card front panel jack (i.e., TX MON) to the Central Rack-mounted maintenance speaker front panel AUDIO INPUT jack without taking the position equipment off-line.

NOTE

The maintenance access card, which has no front panel controls of its own, provides jack access to the transmit or receive signal paths of a position currently selected for monitoring purposes.

#### 6.7.1.1 SCT/MCT Set-up Procedure

NOTE

For the purpose of these procedures, it is assumed that both the supervisor and the technician have logged onto the system. For specific log-in procedures, refer to the SCT manual. A Level 5 password must be entered to be able to place a device in Maintenance Busy mode.

For both the position monitoring or loopback diagnostics, the “tested position” must be in the “Maintenance Busy” mode; to perform this action, the MAINT password must be entered at the MCT. Placing a position in the Maintenance Busy mode will disable the position (i.e., place it off-line); however, only the supervisor has the authority to place the position in this mode, although maintenance personnel can place a position currently in the Maintenance Busy mode into the on-line (normal) operating mode. To place a position in the Maintenance Busy mode, proceed as follows:

NOTE

Steps 1 through 7 must be performed by the supervisor.

1. In SCT Main Selection Menu, select “Configure.”
2. In Configure Menu, select “Devices.”
3. In Configure Rack dialog box, bring up the “Card Cage” dialog box.
4. In Card Cage dialog box, select “slot.” Selection of any of the card slots displays the Device Dialog box.

NOTE

The following selection requires the entry of the MAINT password before the selection is made.

5. In Device dialog box, select “Class.”

NOTE

The options for the “Class” field are “On-line,” “Maintenance Busy,” and “Off-line.” “Maintenance Busy” must be selected in order to proceed with these diagnostics procedures.

CAUTION

The Supervisor, when selecting "Maintenance Busy" for a position to be tested, must ensure that operations personnel at the position are moved from that position and that the position speaker volume is at an acceptable level.

6. Select “Maintenance Busy.”
7. If required, enter a serial and/or part number for database tracking.
8. Select “OK” button.
9. Close the “Card Cage” and “Configure” dialog boxes.
10. On the MCT Main Selection Menu, select “On-line.”
11. Select “Diagnostics.”
12. “Position Monitoring” diagnostic dialog box will appear on the MCT screen.
13. Proceed to diagnostic procedures, either paragraph 6.7.1.2, Position Monitoring Test, or 6.7.1.3, Position Loopback Test, as desired.

### 6.7.1.2 Monitoring Test Procedure

This procedure allows technicians at the maintenance position in the Central Equipment Rack to monitor audio from a selected test position. For example, selected legal record output can be monitored to verify the presence of a signal by patching the selected channel from the appropriate Maintenance Access Unit front panel MON (TX function) jack to the AUDIO INPUT jack on the front panel of the Central Rack-mounted maintenance speaker panel located directly below the maintenance position INSTRUCTOR/TRAINEE jackbox. A patch cord (with standard telephone tip) and ring jacks may be used to accomplish this step. This optional feature permits audio to be heard at the maintenance speaker as well as the headset. **Figure 6-50** shows the diagnostic dialog box in the "Position Monitoring Test" mode.

NOTE

**Maint Position:** This field displays the maintenance position being used for the monitoring procedure. (Normally this is the maintenance position in the central equipment rack.) Only the supervisor, at the SCT, has the authority to assign or change this designation; in any event, separate procedures (not provided here) would be **required** to do this.

**Tested Position:** This field displays the position to be tested from the list.

**Test Subject:** Allows the technician to select the "Loopback **Test**" if it is not desired to run the "Position Monitoring" procedure at this point.

NOTE

Running the **monitoring** test will not disable the operator position undergoing the test.

NOTE

To determine and select desired equipment position (i.e., "Tested Position"), consult the on-site system configuration **documentation** for position location and configuration. The name of this position normally appears as an alphanumeric display (e.g., 3E-1, TWR-5, etc.), as assigned in a particular system.

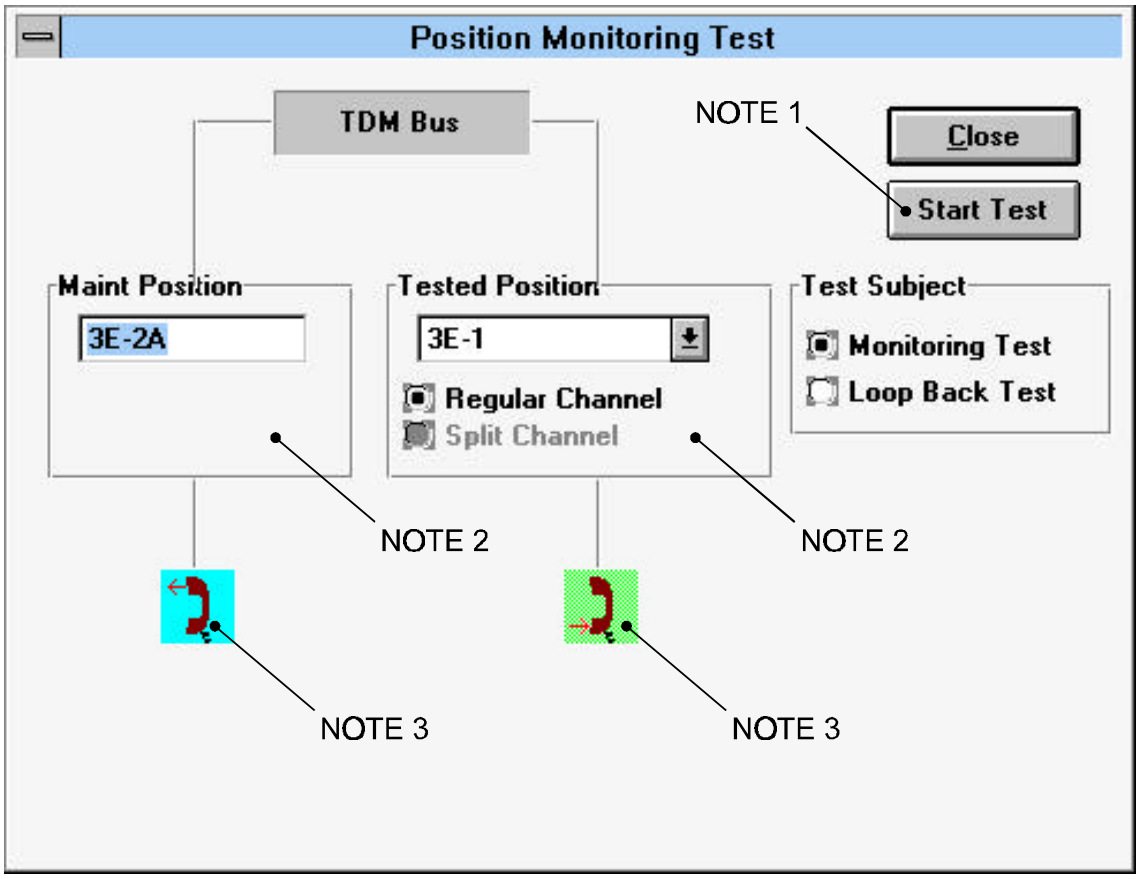


NOTES:
1. "START TEST" CHANGES TO "STOP TEST" UPON INITIATION OF TEST.
2. ACKNOWLEDGEMENT ICONS MOMENTARILY APPEAR IN THESE APPROXIMATE LOCATIONS.
3. POSITION AUDIO DEVICES IN USE DURING TEST.
4. AUDIO IS PRESENT AT THE POSITION HANDSET AND MAY BE PATCHED TO THE MAINTENANCE SPEAKER.

TIB6-49.CDR

*Figure 6-50. Diagnostic Dialog Box for Position Monitoring Test*

1. In the “Tested Position” box, select the equipment to be tested.

NOTE

This may involve either a non-split (normal) channel position or a split channel. If necessary, change setting to reflect proper channel configuration.

2. Select the “Start Test” button to initiate the test.
3. Observe that acknowledgment icons (“ACK” above a “✓”) appear in both “Maint Position” and “Tested Position” boxes. Appearance of the icon in both boxes indicates the position is responding to the MCT commands. If test is successful (i.e., position operating correctly), audio can be heard at the maintenance position headset or speaker. To route monitored audio to the maintenance speaker, the G/G or master headset loudspeaker button must be selected prior to initiating test. If icon fails to appear at either box, the position has not responded to the MCT commands. If this occurs, select the “Close” button, then re-run the check. If the procedure again fails to work, check for system hardware/software faults.
4. To end test, select the “Stop Test” button.

NOTE

“Start Test” changes to “Stop Test” upon activation of test.

5. Select the “Close” button to close the dialog box.
6. The class of the position under test should now be restored to ON-LINE.

### 6.7.1.3 Loopback Test (Diagnostics)

CAUTION

Performing this test will disable the operator position under test (tested position). This test should be coordinated with ATC when scheduling its performance for any operator position.

This test allows the maintenance position to “loop” a tone through selected signal paths of a tested position’s audio circuitry and to monitor the returned audio signal to

test functionality of the selected path. The “Loopback” test and its attendant audio path test loops is set up and performed at the MCT position by maintenance personnel. The test loop originates at the maintenance position and is looped back (directed back toward the source) at a selected codec associated with the signal path to be tested. This loop returns the audio to the maintenance position headset. For the “Loopback” test, the tested position is disabled (i.e., placed off-line).

Selection of the particular loopback audio device to be used determines the type of loopback test that will be run. The type of audio devices available for selection at the MCT are as follows:

- Instructor Headset
- Trainee Headset
- Instructor Microphone
- Trainee Microphone
- Speaker (Speaker Module only, see **Figure 6-49**)

The following loopbacks, based on the type of audio device selected, are available:

a) Instructor Interface (Loopback I) (From/To Instructor Jackbox)
    - Instructor (A or B) HDST/Loopback Audio
    - Instructor (A or B) MIC and Ear/Loopback and Legal Record Audio

b) Trainee Interface (Loopback T) (From/To Trainee Jackbox)
    - Trainee (A or B) HDST Loopback Audio
    - Trainee (A or B) MIC and Ear/Loopback and Legal Record Audio

c) Speaker Module (To and From Position Audio Board)
    - Voice and Chime Audio

By using the MCT to establish a loopback test path from the maintenance position at the central equipment racks via a selected (specified) position, the technician can verify the validity/continuity of the digital/analog audio paths in the loop (i.e., the requisite audio/tones are present). The maintenance position transmits a 1000-Hz tone to the position under test. The looped-back tone is returned to the maintenance position, and can be heard at the headset; or, this tone can be heard at the maintenance speaker if its audio input jack has been patched to the Maintenance Access Unit (TX) MON jack. **Figure 6-51** shows the diagnostic dialog box in the “Position Loopback Test” mode.

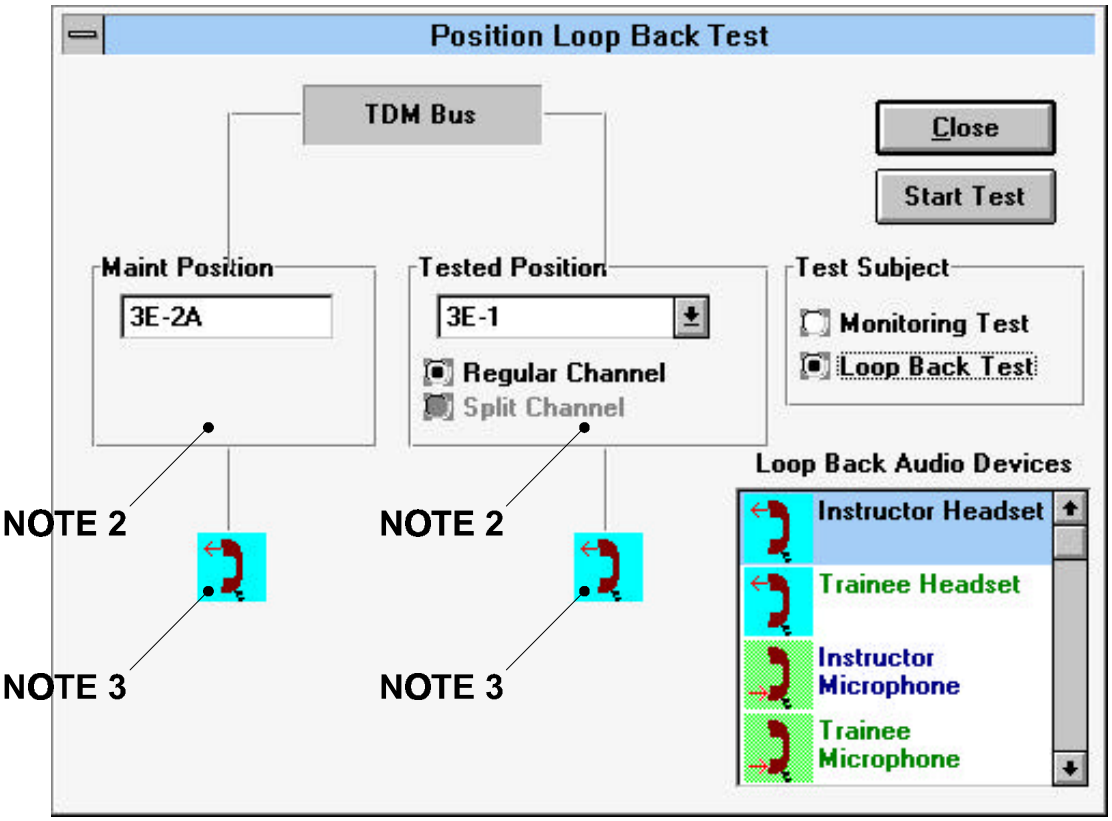


**NOTES:**

1. **"START TEST" CHANGES TO "STOP TEST" UPON INITIATION OF TEST.**

2. **ACKNOWLEDGEMENT ICONS MOMENTARILY APPEAR IN THESE APPROXIMATE LOCATIONS.**

3. **POSITION AUDIO DEVICES IN USE DURING TEST.**

*Figure 6-51. SCT/MCT Diagnostic Dialog Box for Position Loopback Test Mode*

NOTE

**Maint Position:** This field displays the alphanumeric code for the maintenance position designated for this ETVS system. Normally, the maintenance position equipment occupies one location within the central equipment rack. Only the supervisor has the authority to change this position designation; this can be done using separate procedures not provided here.

**Tested Position:** This field displays the position selected to be tested from the list.

**Test Subject:** Allows technician to change the "Test Subject" from "Monitoring" to "Loopback Test" mode and diagnostics screen.

NOTE

To determine and select desired equipment position (i.e., "Tested Position"), consult the on-site system configuration documentation for position location and configuration.

1. If necessary, perform SCT/MCT set-up procedure, described in paragraph 6.7.1.1. If "Position Monitoring Test" dialog box is already on screen, set-up is not necessary; proceed to step 2.
2. In "Test Subject" box, select "Loopback Test."

NOTE

This test may involve either a non-split (normal) channel position or a split channel position. If necessary, change setting to reflect proper channel configuration. The name of this position normally appears as an alphanumeric display (e.g., 3E-1, TWR-5, etc.), as assigned in a particular system.

3. In "Tested Position" box, select the equipment to be tested.

NOTE

This may involve either a non-split (regular) channel position or a split channel. If necessary, change setting to reflect the proper channel configuration.

4. In “Loopback Audio Devices” box, select the audio device to be used from the available list. If necessary, scroll down the list until the desired selection appears. Note that the icon representing the selected device (e.g., Speaker; Instructor Headset, etc.) changes with your “selection.”.
5. Select “Start Test” button to initiate the test.
6. Observe that an acknowledgment icon (“ACK” above a “✓”) momentarily appears in the “Maint Position” and “Tested Position” boxes. Appearance of this icon in both boxes indicates the position is responding to the MCT commands. If the audio signal has been looped back as intended, the audio can be heard at the maintenance position headset. Audio can also be monitored by patching the (TX) MON jack on the Maintenance Access Unit to the input jack on the Maintenance Speaker Panel. During speaker loopback testing, the audio will be heard at the tested position’s speaker only.
7. To end the test, select the “Stop Test” button.

NOTE

“Start Test” changes to “Stop Test” upon activation of test.

8. Select the “Close” button to close the dialog box.
9. The class of the position under test should now be restored to ON-LINE.

## 6.8 RECOMMENDED PACKING INSTRUCTIONS FOR EQUIPMENT BEING SHIPPED TO REPAIR FACILITY

The following packing procedures are recommended for shipping the system equipment to depot for repair.

### 6.8.1 Circuit Card (CCA) or Similar Assemblies

A circuit card assembly or other similar assembly is to be properly wrapped with cushioning, placed in an anti-static bag or wrap, and then placed in an intermediate or shipping carton as appropriate. Filler cushioning should be placed in the shipping carton to completely fill the sides and top of the carton. A minimum of two inches should be placed in the bottom of the carton.

### 6.8.2 Non-Static Sensitive Assembly

Non-static sensitive assemblies are to be properly wrapped with cushioning, placed in a standard commercial plastic bag or wrap, and then placed in an intermediate or shipping carton as appropriate. Filler cushioning should be placed in the shipping carton to completely fill the sides and top of the carton. A minimum of two inches should be placed in the bottom of the carton.

### 6.8.3 Equipment Size Assemblies

Equipment size assemblies (i.e., rack-mounted) are to be properly cushioned or wrapped and placed in shipping carton. Use filler cushioning same as described in paragraphs 6.8.1 and 6.8.2.

### 6.8.4 Materials

The following materials are recommended as packages and packing materials for shipment by common carrier.

#### 6.8.4.1 Wraps and Cushioning

a) PPP-C-795 Flexible, cellular, plastic film (anti-static-pink)

b) PPP-C-1842 Plastic, open cell (anti-static-pink)

c) PPP-C-1797 Resilient, low density, unicellular propylene

## 6.9 TRANSMISSION LEVEL (TL) TUTORIAL

This section provides a tutorial explaining the meaning of “TL” in the context of how it is used throughout Section 6 performance and alignment procedures of this Technical Instruction Book. The tutorial defines TL and its relationship to 0TLP (a predefined system reference point) and dBm0, a relative power level which is referenced to the 0TLP. The TL tutorial provides definitions and several examples of the use of TL in mathematically determining the level change between two points and calculating absolute power.

The lookup chart of **Table 6-63** is provided to clarify the conversion of dBm0 to dBm. The units “TL,” “dBm0,” “dBm,” and “0TLP” appear many places in the performance checks and alignment procedures. Reference to this TL tutorial should assist the user in gaining a clearer understanding of the meaning, usage, and relationship of these units.

Paragraph 6.9.3 provides a tutorial for radio AGC transmit adjustment procedures.

### 6.9.1 Tutorial

**Definition.** The Transmission Level (TL) is a number (may be positive or negative) that reflects the change in level with respect to a predefined system reference point (0TLP).

**Example:** If a -10 dBm signal is measured at the 0TLP, then the level measured at a -16 TL point would be -26 dBm.

If the absolute power level is known at any given point in the system, then the absolute level can be determined at any other point in the system.

**Example:** Suppose a -20 dBm signal is injected at a -10 TL point. What would be the level measured at a -6 TL point?

1. Determine the level change (in dB) between the two points as follows:

   (TL of point where the level is to be determined) - (TL of point where the level = Level change—in dB—is known)

   NOTE

   This point is considered the point of reference since the absolute level is known at this point.

   (-6 TL) - (-10 TL) = -6 TL + 10 TL = +4 dB

2. Calculate the absolute power:

   -20 dBm + 4 dB = -16 dBm
   Therefore, -16 dBm is measured at the -6 TL point.

**Example:** Injecting a -20 dBm signal into the -6 TL point, what level is measured at the -10 TL point?

NOTE

This example is just the reverse of the above example.

1. Determine the level change between the two points:

   (-10 TL) - (-6 TL) = -4 dB

   NOTE

   The sign change (-4 dB vs. 4 dB) from the above example is due to the fact that the point of reference changed from the -10 TL point to the -6 TL point.

2. Calculate the absolute power:

   -20 dBm + (-4 dB) = -24 dBm
   Therefore, -24 dBm is measured at the -10 TL point.

**Definition of dBm0.** A relative power level which is referenced to the 0TLP. If the system TLs are all known, then defining the signal in dBm0 allows us to determine the absolute power in dBm at any other point in the system.

**Example:** The PBX VOX circuit is guaranteed to detect signal levels greater than -22 dBm0. Determine the absolute level required at the PBX receive (assume a -6 TL at the receive) to trigger the VOX detect circuitry.

(Relative power—in dBm0) + (TL) = -22 dBm0 + (-6 TL) = -28 dBm
Therefore, injecting a -28 dBm0 at the receive of a PBX will trigger the VOX circuitry.

### 6.9.2 dBm Lookup Chart

The following chart (**Table 6-63**) is provided to compare (and convert) dBm0 to dBm.

***Table 6-63. Lookup Chart: dBm0 to dBm***

| Specified Signal (in dBm0) | Measured Signal at 0 TL (in dBm) | Measured Signal at -3 TL (in dBm)* | Measured Signal at -16 TL (in dBm) |
|---|---|---|---|
| +3 | +3 | 0 | -13 |
| +2 | +2 | -1 | -14 |
| +1 | +1 | -2 | -15 |
| 0 | 0 | -3 | -16 |
| -1 | -1 | -4 | -17 |
| -2 | -2 | -5 | -18 |
| -3 | -3 | -6 | -19 |
| . | . | . | . |
| . | . | . | . |
| . | . | . | . |
| -37 | -37 | -40 | -53 |
| . | . | . | . |
| . | . | . | . |
| . | . | . | . |
| -50 | -50 | -53 | -66 |

### 6.9.3 Radio AGC Transmit Adjust Tutorial

#### 6.9.3.1 Introduction

The following tutorial illustrates the effects that the Radio (325936-001) AGC circuitry has on transmit path adjustments.

#### 6.9.3.2 Functional Description

**Figure 6-52** shows a high level block diagram of the Radio's transmit path in relation to the ETVS position. When the Radio is configured without AGC, mic audio from the position is routed directly to the transmit amplifier stage. During the alignment of the transmit path, gain of the transmit amplifier stage is adjusted to the desired TL level. For Radios configured for AGC, the mic audio is now normalized (see **Figure 6-53** for compression region) prior to the transmit amplifier stage. **Table 6-64** indicates how the transmit path is affected with and without AGC.

***Table 6-64. Transmit Path as Affected by AGC***

| MIC Input | Transmit TL | XMT output (no AGC)* | XMT output (AGC)** |
|---|---|---|---|
| 0dBm | 0 TL | 0dBm | 0dBm |
| | -10 TL | -10dBm | -10dBm |
| | -12TL | -12dBm | -12dBm |
| | | | |
| -10dBm | 0 TL | -10dBm | 0dBm |
| | -10 TL | -20dBm | -10dBm |
| | -12 TL | -22dBm | -12dBm |
| | | | |
| -20dBm | 0TL | -20dBm | 0dBm |
| | -10TL | -30dBm | -10dBm |
| | -12TL | -32dBm | -12Bdm |

* Path (1) on **Figure 6-52**

** Path (2) on **Figure 6-52**

Data from **Table 6-64** shows how AGC affects the transmit path on the radios. Notice that for a mic input of 0 dBm, there is no difference in XMT output whether AGC is configured or not. This is due to the fact that the AGC circuit normalizes an input range to 0 dBm (see **Figure 6-53**). Therefore, with a 0 dBm input the XMT output level is the same with or without the AGC. For mic inputs other than 0 dBm, XMT output differences between AGC and non-AGC applications can be observed.

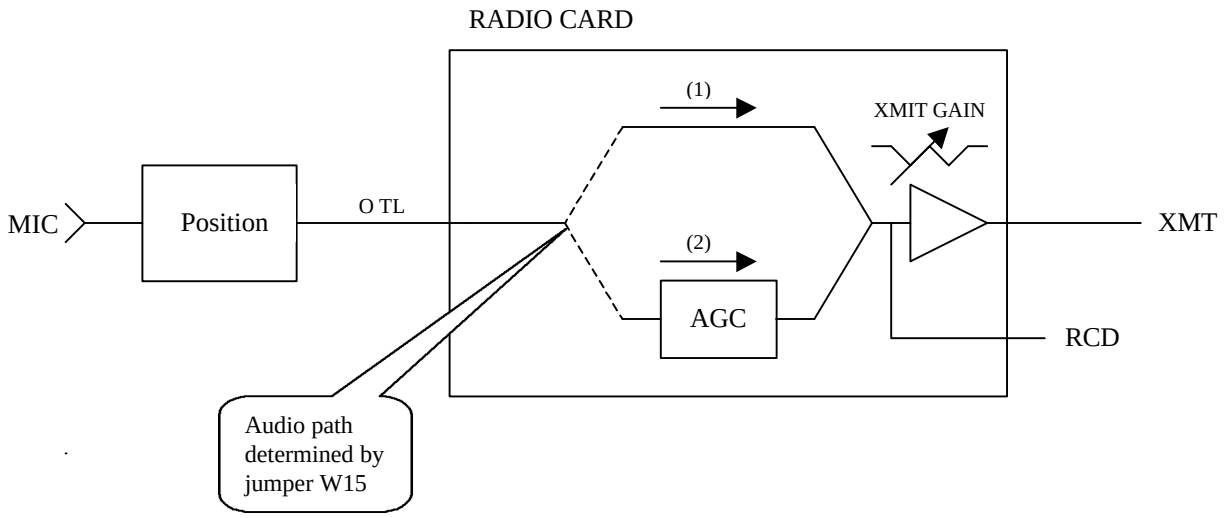


***Figure 6-52. Radio Transmit Paths (AGC and Non-AGC)***

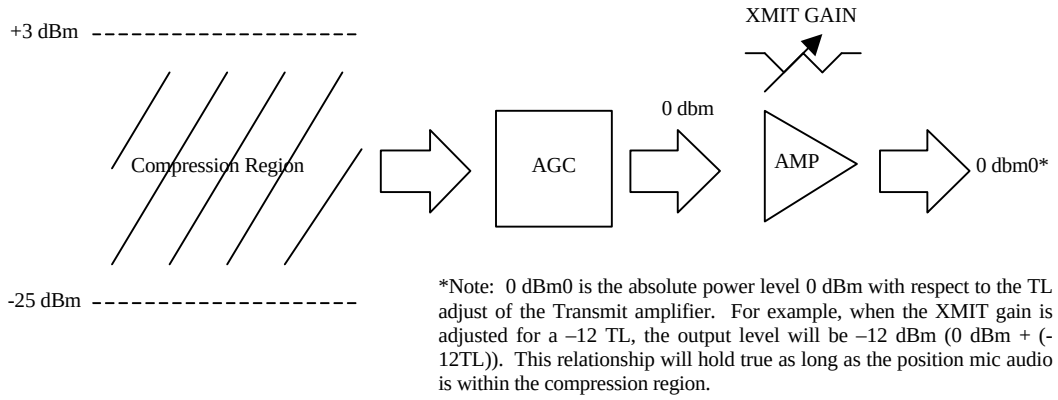


***Figure 6-53. AGC Compression Region/Normalization of Input Range***

#### 6.9.3.3 Record Path

For a Radio card configured without AGC, the record path (refer to RCD of **Figure 6-52**) is at a 0 TL point. This is no longer the case when AGC is configured. Since the output of the AGC circuit is connected directly to the record output, audio within the compression range (+3dBm to -25dBm) will be recorded at 0 dBm.

# SECTION 7.

# PARTS LIST

## 7.1 INTRODUCTION

This section contains a listing of the repair parts (**Table 7-1**) for the ETVS system. These items are contained by ETVS Basic Configuration Systems BS-1 through BS-4.

This system's equipment has no reference designators. Parts identification is by part number only.

The composition of a particular system and its configuration are determined by site requirements. The listings are all to the line replaceable unit (LRU), except for certain expendables such as position fuses, LEDs, and batteries.

Refer to **Table 1-3** for a cross reference of unit front panel names and the unit names used in the parts list. **Table 1-3** also includes unit part numbers for kit items and the part numbers of associated firmware.

NOTE

For the TEDs, hinged and wedge mounting hardware configurations are optional. Part numbers for these assemblies are shown in Figure A-23. These are non-LRU items.

## 7.2 LIST OF MANUFACTURERS

| | |
|---|---|
| 25512 | DENRO<br>9318 Gaither Road<br>Gaithersburg, MD 20877 |
| 25244 | Johnson Controls, Inc.<br>Specialty Battery Division<br>900 East Keefe Ave.<br>Milwaukee, WI 53212 |
| 59270 | Selco Products, Inc.<br>7580 Stage Road<br>Buena Park, CA 9062 |
| 62676 | Radio Shack<br>1700 Two Tandy Center<br>Fort Worth, TX 76102-2815 |
| 81349 | Promulgated by Department of Defense/Military Specifications |
| 81541 | Airpax Protector Group<br>807 Woods Road<br>P.O. Box 520<br>Cambridge, MD 21613 |

## *Table 7-1. Parts List*

| Item | P/L Name | Cage Number | Part Number |
|---|---|---|---|
| | *Central Rack Equipment: Power/Operator* | | |
| 1. | Fuse Pnl Assy, Integ, Black | 25512 | 110942-001 |
| 2. | PC Assy, Gateway | 25512 | 110934-001 |
| 3. | PS, MDL, AC/DC Conv 28V @ 125A | 25512 | 400052-003 |
| 4. | Kit, CCA, Parallel I/O W/Fmwr | 25512 | 325663-001 |
| 5. | Kit, CCA, Gateway Intfc W/Fmwr | 25512 | 325671-005 |
| 6. | Kit, CCA, Alarm Processor | 25512 | 325674-005 |
| 7. | Kit, CCA, TMU, Black | 25512 | 325962-001 |
| | *Central Rack Equipment: Maintenance* | | |
| 8. | System Alarm Assy | 25512 | 110933-003 |
| 9. | CCA, Transient Surge Protector, [50 lines] | 25512 | 120611-001 |
| 10. | CCA, Transient Surge Protector, [32 lines] | 25512 | 120611-002 |
| | *Central Rack Equipment: CCA Group* | | |
| 11. | CCA, Ring Generator Card | 25512 | 120932-001 |
| 12. | Kit, CCA, HSDL | 25512 | 325964-001 |
| 13. | Kit, CCA, CMU, Black | 25512 | 325960-001 |
| 14. | Kit, CCA, PBX Line Intf | 25512 | 325928-001 |
| 15. | Kit, CCA, SS-1/SS-4 Line Intfc | 25512 | 325929-001 |
| 16. | Kit, CCA, ASU Line Intfc | 25512 | 325930-001 |
| 17. | Kit, CCA, E&M Line Intfc | 25512 | 325931-001 |
| 18. a | Kit, CCA, Tel Conf | 25512 | 325935-001 |
| 18. b | Kit, CCA, Tel Conf (w/AGC) | 25512 | 325935-008 |
| 19. | Kit , CCA, Rad M/S Intfc | 25512 | 325936-001 |
| 20. | Kit, CCA, 4W PBX Line Intfc | 25512 | 325944-001 |
| 21. | Kit, CCA, Rmt Interlocking | 25512 | 325937-001 |
| 22. | Kit, CCA, Rmt Interlocked | 25512 | 325937-002 |
| | *Central Rack Equipment: Maintenance Position (Hardkey Equipment Only)* | | |
| 23. | CCA, Maintenance Access | 25512 | 120975-001 |
| 24. | Kit, CCA, Opr Prcsr W/Diff, 25 MHz | 25512 | 325996-003 |
| 25. | Spkr Pnl Assy, 28 VDC W/Vol, Blk | 25512 | 110703-002 |
| 26. | Speaker Module Assy, Digital, Tower | 25512 | 110580-003 |
| 27. | Jackbox Assembly | 25512 | 110948-001 |
| 28. | IA Module Assembly | 25512 | 110541-001 |

## *Table 7-1. Parts List (Continued)*

| Item | P/L Name | Cage Number | Part Number |
|---|---|---|---|
| 29. | SW, Rad Mdl W/LCD, 20 Btn, Bg | 25512 | 110717-001 |
| 30. | Integrated BOP Assy, W/Pots | 25512 | 110946-005 |
| | *Remote Power Rack* | | |
| 31. | System Alarm Assy | 25512 | 110933-003 |
| 32. | Fuse Pnl Assy, Integ, Black | 25512 | 110942-001 |
| | *Position Equipment: (Type 1) IBOP, Normal* | | |
| 33. | IA Module Assembly | 25512 | 110541-001 |
| 34. | Speaker Module Assy, Digital, Tower | 25512 | 110580-003 |
| 35. | Intergrated BOP Assy, W/Pots | 25512 | 110946-005 |
| 36. | Jackbox Assembly | 25512 | 110948-001 |
| 37. | Kit, CCA, Opr Prcsr W/Diff 25 MHz | 25512 | 325996-003 |
| | *Position Equipment: (Type 1) IBOP, Split* | | |
| 38. | IA Module Assembly, Split | 25512 | 110541-002 |
| 39. | Speaker Module Assy, Digital, Tower | 25512 | 110580-003 |
| 40. | Intergrated BOP Assy, W/Pots, Split | 25512 | 110946-006 |
| 41. | Jackbox Assembly | 25512 | 110948-001 |
| 42. | Kit, CCA, Opr Prcsr, Split W/Diff 25 MHz | 25512 | 325938-006 |
| | *Position Equipment: (Type 2) LCD TED, Normal* | | |
| 43. | Speaker Module Assy, Digital, Tower | 25512 | 110580-003 |
| 44. | Pots Module Assy, Non-split | 25512 | 110945-001 |
| 45. | Jackbox Assembly | 25512 | 110948-001 |
| 46. | 5 Slot Card File Assy, LCD, TED | 25512 | 110949-001 |
| 47. | TED, LCD, TRACON | 25512 | 259252-001 |
| 48. | TED, LCD, Tower | 25512 | 259253-001 |
| 49. | Kit, CCA, Opr Prcsr W/Diff 25 MHz | 25512 | 325996-003 |
| | *Position Equipment: (Type 2) LCD TED, Split* | | |
| 50. | Speaker Module Assy, Digital, Tower | 25512 | 110580-003 |
| 51. | Pots Module Assy, Split | 25512 | 110945-002 |
| 52. | Jackbox Assembly | 25512 | 110948-001 |
| 53. | 5 Slot CD File Assy, Split, LCD | 25512 | 110949-002 |
| 54. | TED, LCD, TRACON | 25512 | 259252-001 |
| 55. | TED, LCD, Tower | 25512 | 259253-001 |

## *Table 7-1. Parts List (Continued)*

| Item | P/L Name | Cage Number | Part Number |
|---|---|---|---|
| 56. | Kit, CCA, Opr Prcsr, Split W/Diff 25 MHz | 25512 | 325996-004 |
| | *Position Equipment: Mini-BOP* | | |
| 57. | Speaker Module Assy, Digital, Tower | 25512 | 110580-003 |
| 58. | Jackbox Assembly | 25512 | 110948-001 |
| 59. | 5 Slot Card File Assy, MBOP | 25512 | 110949-003 |
| 60. | Assy, Bsc Opr Posn, 30 Btn, Bg | 25512 | 110951-001 |
| 61. | Kit, CCA, Opr Prcsr W/Diff 25 MHz | 25512 | 325996-003 |
| | *Position Equipment: Mini-BOP, Split* | | |
| 62. | Speaker Module Assy, Digital, Tower | 25512 | 110580-003 |
| 63. | Jackbox Assembly | 25512 | 110948-001 |
| 64. | 5 Slot Card File Assy, MBOP | 25512 | 110949-003 |
| 65. | Kit, CCA, Opr Prcsr W/Diff, 25 MHz | 25512 | 325996-004 |
| | *Position Equipment: Hardkey Modules* | | |
| 66. | Sw, Rad Mdl W/LCD, 20 Btn, Bg | 25512 | 110717-001 |
| 67. | Sw, D/A Mdl, 20 Btn, Bg | 25512 | 110718-001 |
| 68. | Sw, D/A Mdl, 35 Btn, Bg | 25512 | 110967-001 |
| 69. | Sw, Prgm D/A Mdl, 4 Btn W/LCD, Bg | 25512 | 110719-001 |
| | *Position Equipment: Remote Position Interface* | | |
| 70. | RPIU Assy, Non-Split, Local | 25512 | 110956-003 |
| 71. | RPIU Assy, Non-Split, Remote | 25512 | 110956-004 |
| 72. | RPIU Assy, Split, Local | 25512 | 110956-001 |
| 73. | RPIU Assy, Split, Remote | 25512 | 110956-002 |
| | *Position Equipment: Accessories* | | |
| 74. | Foot Sw Assy, Linemaster 23-A | 25512 | 110023-023 |
| | *Peripheral Equipment: Local SCT/MCT* | | |
| 75. | Kit, Local SCT/MCT w/o Printer | 25512 | 320931-001 |
| 76. | Printer, Dot Matrix, Mlt SP | 25512 | 259018-001 |
| 77. | UPS, Floor Mount, 1400 VA | 25512 | 259245-001 |
| | *Peripheral Equipment: Remote SCT/MCT* | | |
| 78. | Kit, Remote SCT/MCT | 25512 | 320932-001 |
| 79. | Printer, Dot Matrix, Mlt SP | 25512 | 259018-001 |

## *Table 7-1. Parts List (Continued)*

| Item | P/L Name | Cage Number | Part Number |
|---|---|---|---|
| 80. | UPS, Floor Mount, 1400 VA | 25512 | 259245-001 |
| | *Peripheral Equipment: Supervisor Record* | | |
| 81. | Rcdr Assy, ISDN Supervisory | 25512 | 110735-001 |
| 82. | Kit, CCA, Opr, Spt w/Diff, 25 Mhz, Sup Rec | 25512 | 325938-006 |
| 83. | Tape Recorder, Rmt [Voice] Actvtd | 62676 | 259134-001 |
| | *Peripheral Equipment: Remote Alarm* | | |
| 84. | Remote Alarm Assembly | 25512 | 110838-002 |
| | *Expendable Items:* | | |
| 85. | Fuse, (Fuse Pnl Assy), 5A @ 250V, Fast Blow, F02A250VA | 81349 | 510005-5R0 |
| 86. | Btry, Sld Lead Acid, 12V, 45AH | 25244 | 390003-001 |
| 87. | Thermostat, Normally Open, 160º F (NOTE 2) (Non-LRU)<br><br>NOTES:<br>2. Source 1 = 81541<br>Source 2 = 59270<br>2. On ETVS spares list (P/O spares kit) | 81541 (NOTE 1)<br>59270 (NOTE 1) | 520099-001 |
| 88. | LED, T1-¾ Midget Based, Red<br>(P/O Overheat Lamp Assembly) (Non-LRU) | 25512 | 220042-001<br>(111548-001) |
| | *Central Rack Equipment: Maintenance Position (TED Equipment Only)* | | |
| 89. | Speaker Module Assembly, Ditital, Tower | 25512 | 110580-003 |
| 90. | TED, LCD, Tower | 25512 | 259253-001 |
| 91. | Jackbox Assembly | 25512 | 110948-001 |
| 92. | Pots Module Assy, Non-Split | 25512 | 110945-001 |
| 93. | 5 Slot Card File Assy, LCD, TED | 25512 | 110949-001 |
| 94. | Kit, CCA, Opr Prcsr w/Diff, 25 MHz | 25512 | 325996-003 |
| 95. | CCA, Maintenance, Access | 25512 | 120975-001 |
| 96. | Speaker Pnl Assy, 28 VDC w/Vol, Blk | 25512 | 110703-002 |